City of Piedmont
COUNCIL AGENDA REPORT

DATE: May 4, 2026

TO: City Council

FROM: Rosanna Bayon Moore, City Administrator

SUBJECT: Consideration of Approval of a License Agreement with New Cingular Wireless PCS, LLC (AT&T) for Wireless Communication Facilities at 120 Vista Avenue

---

RECOMMENDED ACTIONS

1. Approve the attached License Agreement with New Cingular Wireless PCS, LLC (AT&T);
2. Authorize the City Administrator to execute the agreement in substantially the same form as presented

EXECUTIVE SUMMARY

The current microcell lease agreement with AT&T allows for wireless communication facility antennas to be installed on the tower atop the Fire Station and related equipment within the easternmost garage along Magnolia Avenue. The lease was originally executed in 1999, was amended in 2002 to increase the lease area within the garage, and was again amended in 2019 to extend the lease term to May 1, 2026.

Beginning in 2024, based on the fact that the City had an outdated agreement that was close to expiration, City staff conducted negotiations with AT&T on a new agreement. Staff's intent was to replace the amended original lease with a new license agreement that incorporates the best and most current industry practices to better protect the City's interests. A license agreement is preferrable to the City because a lease confers the exclusive right to occupy property, whereas a license grants permission to use certain property for a specific purpose.

Key terms of the new Revocable License and Wireless Telecommunications Agreement (License Agreement) include the following:

- An initial term of 5 years with two additional 5-year extensions, for a total of 15 years.
- An initial license fee (rent) of $4,471.64 per month, with an annual license fee adjustment of 3.00 percent each year.
- A one-time $2,000 administrative fee to cover the City's costs to negotiate and prepare the license agreement.
- A performance and removal bond of $25,000 to be provided by the licensee.
- No change to the leased area or equipment.

Staff finds that the terms of the new License Agreement for the existing microcell wireless communication facility at the Fire Station are favorable to the City and recommends adoption.

DISCUSSION

Piedmont residents rely upon wireless telecommunications services, such as those provided by AT&T through the company's facilities at 120 Vista Avenue.

Pursuant to the City's Charter, all leases of City property must be approved by ordinance. On June 7, 1999, the City Council approved the second reading of Ordinance 606 N.S. establishing a lease with Bay Area Cellular Telephone Corporation (AT&T) to install microcell wireless communication antennas, cables, and equipment on the roof of the Piedmont Fire Station and in the garage at City Hall at 120 Vista Avenue.

On August 12, 2002, the City Council approved Ordinance 632 N.S. amending the lease with AT&T, to expand the geographic area of the ground lease in the City Hall garage by 13 square feet, replace two antennas, modify the cabling, and increase the rent paid by AT&T. The amended lease did not change the expiration date or term of the lease.

May 20, 2019, the City Council approved Ordinance 745 N.S. amending the lease with AT&T. Amendments included an extension of the term to May 1, 2025, an increase of the base rent to $2,951.65 (a 5% increase) to be adjusted annually in accordance with the local consumer price index, and the provision for up to $2,000 for staff and attorney time spent preparing the amendment.

Recommended Revocable License and Wireless Communications Agreement

The table below provides a comparison of key terms between the current (amended) 1999 lease agreement and the recommended license agreement that would replace it.

Key Terms Comparison

Current (1999) Lease Terms as Amended	Terms of Recommended License Agreement
1. Term	
5 years, plus three 5-year renewal options for a total of 20 years. As amended expires May 1, 2026	5 years, plus two additional 5-year terms, for a total of 15 years
2. Rent (License Fee)	
Base rent of $750 per month (currently $3,849)	License fee (rent) of $4,471.64 per month
3. Rent (License Fee) Adjustment	
Annual adjustment of an amount equal to CPI, but no less than 3% and no more than 10%	Annual License fee adjustment of 3%
4. Premises	
The premises consist of approximately 58 square feet of space in the equipment shed located at City Hall and two antennas and radios attached to the existing communications tower located on the roof of the Fire Station	No change
5. Cost Recovery	
$2,000 administrative fee	$2,000 administrative fee

6. Relocation	
NA	The City may require AT&T to relocate, at its cost, to other locations on the property, only once and subject to a 1-year notice
7. Performance and Removal Bond	
NA	Licensee shall provide a performance and removal bond in the amount of $25,000

CONCLUSION

The recommended License Agreement replaces the amended 1999 Lease Agreement with AT&T for its facilities at the City-owned property at 120 Vista Avenue. This update includes provisions informed by best practices developed during the past 25 plus years of implementing agreements between wireless communications industry and local governments. Surveys of other microcell sites in other jurisdictions indicate the new license fee is appropriate for the scale of the facility. The 3 percent annual adjustment provides assurance of the revenue for the next 15 years. The administrative fee helps cover the cost of negotiations involving this agreement. The License Agreement enables the City to have AT&T relocate its equipment should the City redevelop the property.

FISCAL IMPACT

The proposed License Agreement will generate ongoing revenue to the City through a base license fee of $4,471.64 per month (approximately $53,660 annually), with a fixed annual increase of 3 percent over the initial 5-year term and any exercised extensions. This represents approximately a 16% increase over the current monthly revenue of $3,849.

In addition, the City will receive a one-time administrative fee of $2,000 to recover staff and legal costs associated with negotiating and preparing the agreement. The agreement also requires a $25,000 performance and removal bond, providing financial assurance for the removal of equipment if necessary.

Report by: Kevin Jackson, Planning & Building Director

ATTACHMENTS

1. Revocable License and Wireless Communications Agreement between the City of Piedmont and New Cingular Wireless PCS, LLC

REVOCABLE LICENSE
AND
WIRELESS TELECOMMUNICATIONS AGREEMENT

Between the

City of Piedmont

and

New Cingular Wireless PCS, LLC

Approved by the City of Piedmont May 4, 2026

LICENSE
AND
WIRELESS TELECOMMUNICATIONS AGREEMENT

This Revocable License and Wireless Telecommunications Agreement (the "**License**") is made and entered into this 4th day of May, 2026 (the "**Effective Date**"), by and between the City of Piedmont, a California municipal corporation (**Licensor**" or "City"), and New Cingular Wireless PCS, LLC, a Delaware limited liability company, having a mailing address at 1025 Lenox Park Blvd. NE, 3rd Floor, Atlanta, GA 30319 ("**Licensee**"). The Licensor and Licensee are sometimes referred to herein, individually, as a "**Party**", and. collectively, as the "**Parties**". The Parties agree as follows:

ARTICLE 1. PROPERTY AND BACKGROUND.

1.01 The Property. Licensor is the owner of that certain property located at 120 Vista Avenue, Piedmont, California 94611, and also known as Assessor's Parcel No. 050-4625-001 (the "**Property**") as more particularly described in **Exhibit A** attached hereto. Licensee entered into a MicroCell Site Lease dated April 29, 1999 to install a wireless telecommunications facility at the Property. The MicroCell Site Lease was amended twice and will expire on May 1, 2026.

1.02 Wireless Telecommunications Facility. Licensee wishes to receive a license from Licensor, and Licensor wishes to grant a license to Licensee, respecting the use of a portion of the Property for the sole purpose of installing, constructing, maintaining, repairing, replacing, operating, and removing ("**Work**") a wireless telecommunications facility, including, ground-mounted equipment and antenna and radio equipment (the "**Facility**") that will occupy 58 square feet which is located at the City of Piedmont's Fire Station and City Hall (the "**Licensed Area**"), as described and depicted in the attached site plan at **Exhibit B** attached hereto. Consistent with all requirements of the Piedmont Municipal Code and the Piedmont Design Standards and Guidelines, Licensee may apply to modify the Facility described in the attached site plan (and, as may be necessary, the approved Wireless Communications Facilities Permit), to allow modifications of the approved Facility only with Licensor's consent to file such application for land use entitlements and/or permits and with prior approval of a modification to the License, which License approval may be withheld at Licensor's sole and absolute discretion. If approved, such License modification shall become the Facility subject to this License and replace **Exhibit B;** or, in the Licensor's sole discretion, this License shall be amended in writing to add a new Exhibit B-1 to depict the modified Facility.

ARTICLE 2. GRANT OF LICENSE.

2.01 Grant of License. Licensor, acting in its proprietary capacity, grants to Licensee and Licensee accepts from Licensor a revocable license for the nonexclusive use of the Licensed Area, as provided for herein, by Licensee. By taking possession of the Licensed Area, Licensee accepts the Licensed Area in its "as-is, where-is condition" as of the Commencement Date of this License. The Parties agree that said licensed use is upon and subject to the terms, covenants, and conditions herein set forth and Licensee covenants as a material part of the consideration for this License to keep and perform each and all of said terms, covenants, and conditions and that this License is made upon the condition of such performance. Licensee acknowledges and agrees that this License shall be subject and subordinate to the terms and conditions of any and all prior covenants, conditions or restrictions affecting the Property.

2.02 Access. In accordance with the provisions herein including the notice and approval provisions below, Licensee shall have the nonexclusive right to use (in common with Licensor and other occupants, users and licensees on the Property), and subject to any rules and regulations promulgated by Licensor pertaining to the use of such Property, the Property 24 hours per day, 7 days per week, via foot via the access area delineated as such in Exhibit B ("**Access Route**"), in order to install, operate, and maintain the Facility, subject to the limitations set forth below. Licensee agrees that Licensee's vehicular parking, for routine maintenance, shall be limited to

parking within the public right-of-way. Should said public parking present a logistical issue for the Licensee, Licensor may consider alternate parking options.

(a) Requesting Access. Prior to accessing the Property in each instance, Licensee shall comply with the following requirements:

(i) For planned, non-emergency work or work that must be completed outside of business days from 9:00 am to 5:00 pm, and which requires access to the roof, Licensee shall provide written notice to Licensor during Licensor's normal business hours at least two (2) business days in advance of the date of its requested access date. As used in this License, "**business day**" means each calendar day, except Saturday, Sunday and national holidays. Access requests submitted outside of normal Licensor business hours and on weekends and national holidays, shall not be deemed submitted until 9 a.m. PST the next Licensor business day, at which time the two (2) business days advance notice period shall commence.

(ii) In the event Licensee requires emergency access to Property in order to correct a bona fide imminent threat of harm or damage to its property, Licensee's designated site manager shall contact Licensor by phone at (510) 420-3030 (during normal Licensor business hours) or (510) 420-3000 (outside of normal Licensor business hours) to arrange such access. Licensor shall in good faith attempt to expeditiously provide emergency access as requested provided Licensor personnel is available to provide access.

(b) All access to the Property by Licensee shall be subject in each instance to all permits, as well as any applicable local, state, and federal laws, statutes, codes, ordinances, orders, rules, regulations and standards (collectively, "**Laws**") in addition to this License.

ARTICLE 3. TERM.

The initial term of this License (the "**Initial Term**") shall be five (5) years commencing on the date Licensor has approved and executed this License ("**Commencement Date**"). Unless Licensee gives written notice at least six (6) months prior to the end of the Initial Term or any Renewal Term, as applicable and then in effect, and provided Licensee is not default under this License, this License shall automatically be extended upon the expiration of the Initial term, or Renewal Term, as applicable for two (2) additional five (5) year terms (each a "**Renewal Term**"), subject to all terms and conditions of the this License. Each twelve (12) month anniversary of the first day of the first full calendar month following the Commencement Date during the Term shall be referred to as a "**License Year**". Notwithstanding the foregoing provisions of this Article 3, or any other provisions of this License, this License may be terminated and is revocable at any time in accordance with the provisions of Sections 11.01 and 11.03(d).

ARTICLE 4. LICENSE FEE.

4.01 License Fee. Commencing on the first day of the month immediately following the Commencement Date, Licensee shall pay Licensor on or before the fifth (5th) day of each calendar month in advance, **FOUR THOUSAND, FOUR HUNDRED, SEVENTY ONE DOLLARS 64/100 (**$4,471.64) ("License Fee"). In any partial month occurring after the Commencement

Date, the License Fee will be prorated based upon the number of days in such partial month. The License Fee shall be payable by check sent to Licensor's address specified below or to any other person or firm as Licensor may, from time to time, designate in writing at least sixty (60) days in advance of any License Fee due date.

4.02 Net License. This License is a net license and the License Fee payable by the Licensee hereunder to or on behalf of Licensor shall be paid without notice or demand and without offset, counterclaim, abatement, suspension, deferment, deduction or defense.

4.03 Administrative Fee. Concurrent with the full execution of this License, and as a condition precedent to its effectiveness, Licensee shall pay to Licensor a one-time, nonrefundable fee of TWO THOUSAND DOLLARS ($2,000) (the "**Administrative Fee**") as consideration to Licensor on the terms and conditions set forth herein. Licensee acknowledges that the Administrative Fee is not a security deposit and is not applicable against the License Fee or any other charge or fee under this License.

4.04 License Fee Adjustment. After the first License Year, the License Fee shall be increased annually throughout the Term as of the beginning of every License Year (each an "**adjustment date**") by Three percent (3.00%) over the License Fee paid during the previous year.

4.05 Late Charge. If Licensee fails to deliver to Licensor the License Fee within ten (10) days after it is due, Licensee shall pay Licensor a late payment charge equal to 5% of the overdue payment as liquidated damages, in lieu of actual damages. The parties agree that this late charge represents a fair and reasonable estimate of the costs Licensor will incur by reason of Licensee's late payment. Licensor's acceptance of a late charge shall in no event constitute a waiver by Licensor of Licensee's default for the overdue payment, or prevent Licensor from exercising any of the other rights or remedies granted Licensor under this License, at law or in equity.

4.06 Interest. If the License Fee under this License is not paid to Licensor within the timeframes set forth in Section 4.01 through Section 4.04 hereof, they shall commence to bear interest starting thirty (30) days after the date due until fully paid at the lesser rate of (a) 10% per annum or (b) the maximum rate permitted by law. Neither the accrual nor Licensee's payment of interest to Licensor shall be deemed to cure any other default by Licensee under this License.

ARTICLE 5. CONSTRUCTION OF THE FACILITY

5.01 Wireless Communications Facilities Permit and Government Approvals. Licensee shall obtain, at Licensee's sole cost and expense, all land use entitlements or approvals required by applicable law, including the Piedmont Municipal Code (collectively, the "**Approvals**") for the Facility from the Licensor, acting in its regulatory capacity.

5.02 Upon approval, a copy of the Approval(s) shall be attached to this License as **Exhibit B**, with the right to perform the Work on the Facility and all improvements related thereto on the Licensed Area including, but not limited to, wireless telecommunications transmitting and receiving equipment, generators, utility lines, transmission lines, wireless telecommunications transmitting and receiving antennas, and supporting structures and improvements of Licensee.

Licensee may construct the Facility subject to the terms and conditions required by the Approvals and this License. All improvements and the Facility shall be at the expense of Licensee, and the installation of all improvements shall be at the discretion and option of the Parties, provided that such improvements, and all Work related thereto, is consistent with the Approvals and this License. Licensee shall maintain the Licensed Area and the Facility in good condition and repair.

5.03 Construction and Work.

(a) Licensor approved specifications detailing the type, location, and size of the Facility and specifically describing any proposed construction and Work ("**Scope of Work**") and all related Licensor approved plans and renderings are set forth as described in **Exhibit B** attached hereto. Any change to the Scope of Work shall be subject to Licensor's approval as set forth in this License.

(b) Licensee shall complete the construction of the Facility no later than twelve (12) months after the Commencement Date (the "**Construction Period**"). Licensee's failure to do so shall be deemed a material default under this License and Licensor may terminate this License due to an event of default as provided in Section 11.02 hereof.

(c) Licensee shall: (i) perform all Work in substantial compliance with the Scope of Work in a neat, safe and workmanlike manner consistent with generally accepted construction standards and in compliance with all applicable building codes; (ii) notify Licensor of any construction Work and coordinate such Work in such a way as to minimize, to the extent reasonably practical, any interference with Licensor's or any other licensee's or occupant's operations on the Property; (iii) obtain, prior to the commencement of any Work, all necessary federal, state and municipal permits, licenses and approvals, including but not limited to a building permit for the installation of the improvements for the Facility, furnish copies thereof to Licensor prior to commencement of any Work; and perform all Work in compliance with the same and with all Laws; (iv) obtain, and cause any and all contractors and subcontractors to obtain, prior to commencement of any Work, the insurance required under Section 9.02 hereof, including specific requirements to name Licensor as additional insured under such policies, with appropriate endorsements making such policies primary and non-contributory to any insurance maintained by Licensor, and requiring such contractors and subcontractors to provide waivers of subrogation in favor of Licensor; (v) Licensor not permit any mechanics' or materialmen's liens to be attached to the Property; and (vi) cooperate and comply with the existing easements for access, utilities, maintenance, installation and repair on the Property.

(d) In no event shall Licensor's approval of the plans and specifications attached as Exhibits to this License, or of any other plans or specifications, if any, be deemed a representation that the Facility will not cause interference with other equipment or systems on the Property or that the plans or specifications of Licensee comply with applicable Laws; responsibility for such compliance will remain with Licensee.

(e) Licensee shall, at its sole cost and expense, repair (or replace, as necessary), including any surface of, the Licensed Area or the Property that are damaged by or during the

installation, operation, maintenance, repair or replacement of the Facility, ordinary wear and tear, which could not have been avoided by the exercise of reasonable maintenance practices, excepted. If Licensee fails to repair (or replace, as necessary) or refinish any such damage within thirty (30) days following receipt of written notice from Licensor, then Licensor may, in its reasonable discretion, repair (or replace, as necessary) or refinish such damage and Licensee shall reimburse Licensor for all reasonable costs and expenses incurred in such repair (or necessary replacement) or refinishing within thirty (30) days of receipt of an invoice thereof.

(f) Licensee shall not make any alterations, additions or improvements in or to the Licensed Area except as shown on **Exhibit B**, (collectively, "**Alterations**"), without Licensor's prior written consent.

(g) Licensee, shall have the right, during the Term, at its expense, to install utilities (including, but not limited to, the installation of emergency back-up power) on the Property as approved by the Licensor and identified at locations set forth on **Exhibit B** or otherwise reasonably approved by Licensor in writing, and to improve on the present utilities on the Property. Third party utility providers shall be entitled to install electric utilities and broadband facilities to service the Facility in the locations set forth in **Exhibit B** or as otherwise reasonably approved by Licensor in writing.

(h) Licensee shall fully and promptly pay when due for all utilities furnished to the Licensed Area for the use, operation and maintenance of the Facility.

ARTICLE 6. USE, OPERATION AND MAINTENANCE OF THE FACILITY.

6.01 Use. The Licensed Area may be used by the Licensee for the purpose of installing, constructing, maintaining, repairing, replacing, operating and removing the Facility, at its sole cost and expense, for receiving and transmitting wireless telecommunications signals including, but not limited to, cellular and PCS, and for such activities as may be related thereto. Licensee shall not do or permit anything to be done in or about the Licensed Area which will in any way obstruct or interfere with the rights of other licensees or occupants of the Property, or injure or annoy them, or use or allow the Licensed Area to be used for any unlawful or objectionable purpose, nor shall Licensee cause, maintain or permit any nuisance in, on or about the Licensed Area. Licensee shall not commit or suffer to be committed any waste in or upon the Licensed Area and shall keep the Licensed Area in first class repair and appearance.

6.02 [Intentionally Omitted]

6.03 Use Prohibitions. Licensee agrees that in connection with the use and operation of the Licensed Area and the Facility it will not:

(a) Cause or permit substantial and noxious odors to emanate or be dispelled from the improvements; or

(b) Permit undue accumulations of garbage, trash, rubbish, or any other refuse; or

(c) Create, cause, maintain, or permit any nuisance (as defined under applicable Law) in, on, or about the Licensed Area; or

(d) Knowingly use or allow the Licensed Area to be used for any unlawful purpose, or for any purpose which violates the terms of any recorded instrument which affects the Licensed Area and which is senior in priority to this License; or

(e) Violate any Law applicable to the Licensed Area and the improvements thereon.

6.04 Interference with Operation.

(a) Licensee's operation of the Facility shall not adversely interfere with the use or enjoyment of the Property by Licensor or other pre-existing licensees or occupants of the Property. If such interference, including signal interference, shall occur, Licensee shall, upon receipt of written notice thereof, immediately commence commercially reasonable, diligent efforts to correct or eliminate such interference. Any such material and adverse interference to Licensor's operations at the Property shall be deemed a material default under this License and if such interference cannot be corrected by Licensee to the reasonable satisfaction of Licensor within the cure period set forth for such herein, Licensor may terminate this License due to an event of default as provided in Section 11.03(d) hereof.

6.05 Maintenance. Licensee hereby covenants and agrees, at its sole cost and expense: (a) to keep and maintain the Facility in good and safe order and repair and proper operating condition at all times throughout the Term, and to promptly repair all damage to the Licensed Area and the Property caused by Licensee, its agents, representatives, employees, contractors, subcontractors or invitees to Licensor's reasonable satisfaction, ordinary wear and tear, which could not have been avoided by the exercise of reasonable maintenance practices, excepted; and (b) to comply with any and all Laws and the Approvals applicable to the Facility.

ARTICLE 7. OWNERSHIP OF FACILITY.

7.01 The Facility. The Facility, and all improvements and equipment associated therewith, shall remain the exclusive property of Licensee and Licensee shall have the right to replace or remove all or any portion of the Facility, and all improvements and equipment associated therewith provided Licensee has Licensor's written approval and any applicable permit. Licensor shall not be liable for damage, theft, misappropriation or loss of any of the Facility, except to the extent such is the result of any negligent act or omission of Licensor or its employees or agents.

7.02 Licensee's Duty to Remove. At the expiration or sooner termination or revocation of the Term, Licensee shall remove from the Licensed Area all fixtures and improvements, including without limitation the Facility, constructed or placed on the Licensed Area by Licensee and shall return the Licensed Area to the condition it was in prior to any construction pursuant to this License, reasonable wear and tear, which could not have been avoided by the exercise of reasonable maintenance practices, excepted. The cost of such removal shall be paid by Licensee. The duty imposed by this provision is limited to restoring the Licensed Area, and those portions

of the Property used in connection with the operation of the Facility by Licensee, to the same condition existing on the Commencement Date, reasonable wear and tear, which could not have been avoided by the exercise of reasonable maintenance practices, and casualty caused by Licensor excepted. The duty(ies) imposed by this Section 7.03 shall survive the expiration, termination or revocation of this License and shall continue until the duty imposed by this Section 7.03 has been performed to the reasonable satisfaction of Licensor.

7.03 Performance and Removal Bond. Licensee shall provide a performance and removal bond in the amount of $25,000 which is the reasonable estimated costs of removal of the Facility and related facilities. This amount shall be adjusted at each renewal of this License to a current reasonable estimated cost of removal of the Facility and related facilities at the time of renewal. The bond shall secure (1) Licensee's removal of its equipment from the Property following the expiration or earlier termination or revocation of the License and restoration of the Licensed Area to the condition it existed prior to the Commencement Date, reasonable wear and tear, which could not have been avoided by the exercise of reasonable maintenance practices, excepted, and (2) the recovery of any unpaid sums duly owed to the Licensor under this License. The bond shall be maintained in force by Licensee throughout the Term. Licensee agrees to deliver to Licensor a copy of the bond prior to full execution of the License. Prior to the commencement of any Renewal Term, Licensor and Licensee shall review the amount of the bond to assess whether the amount of the bond is reasonably sufficient to cover then current removal and restoration costs. If it is reasonably determined to be insufficient, Licensee shall obtain and maintain in force a bond for such additional amount that Licensor reasonably determines to be sufficient.

ARTICLE 8. TAXES AND ASSESSMENTS.

8.01 Personal Property Taxes. Licensee shall pay (before delinquency) all taxes, assessments, license fees, and other charges that are levied and assessed against Licensee's personal property installed or located in or on the Licensed Area which become payable during the Term. On demand by Licensor, Licensee shall furnish Licensor with satisfactory evidence of these payments.

8.02 Revenue & Taxation Code Section 107.6 Statement. Possessory Interest Tax. Notwithstanding the intent of the Parties as set forth in Section 14.12, Licensee acknowledges that the interest under this License may be determined to create a property interest subject to taxation pursuant to Revenue & Taxation Code Section 107. If this License creates a possessory interest subject to property taxes under California law that is applicable to Licensee, then Licensee shall be responsible for the payment of such taxes.

8.03 Licensee's Tax Liability Prorated. Licensee's liability to pay any taxes shall be prorated on the basis of a 365-day year to account for any fractional portion of a fiscal tax year included in the Term at its inception and expiration or earlier termination or revocation in accordance with this License.

8.04 Tax Contest. Licensee, at its cost, shall have the right at any time to seek a reduction in the assessed valuation of the Licensed Area and the Property or to contest any taxes that are

assessed against Licensee. If Licensee seeks a reduction or contests any taxes, the failure on Licensee's part to pay the taxes shall not constitute a default so long as Licensee complies with the provisions of this Section. Licensor shall not be required to join in any proceeding or contest brought by Licensee unless the provisions of any law require that the proceeding or contest be brought by or in the name of Licensor or any owner of the Property. In that case Licensor shall join in the proceeding or contest or permit it to be brought in Licensor's name so long as Licensor is not required to bear any cost. Licensee, on final determination of the proceeding or contest, shall immediately pay or discharge any decision or judgment rendered, together with all reasonable costs, charges, interest, and penalties incidental to the decision or judgment.

ARTICLE 9. INSURANCE AND INDEMNITY.

9.01 Indemnity by Licensee.

(a) To the furthest extent allowed by law, Licensee shall indemnify, hold harmless and defend Licensor and its officers, officials and employees from any and all claims, loss, liability, fines, penalties, forfeitures, costs and damages (whether in contract, tort or strict liability, including but not limited to personal injury, death at any time and property damage, including damage by fire or other casualty) incurred by Licensor, Licensee, or any other person, and from any and all claims, demands and actions in law or equity (including reasonable attorney's fees and litigation expenses), arising or alleged to have arisen directly out of Licensee's: (i) occupancy, maintenance and/or use of the Property, Licensed Area and/or Facility; or (ii) performance of, or failure to perform, this License. Licensee's obligations under the preceding sentence shall not apply to any loss, liability, fines, penalties, forfeitures, costs or damages caused solely by the negligence, or by the willful misconduct, of Licensor or its officers, officials, employees, agents or volunteers.

(b) Licensee's occupancy, maintenance and use of the Property and Facility shall be at Licensee's sole risk and expense. Licensee accepts all risk relating to Licensee's: (i) occupancy, maintenance and/or use of the Property, Licensed Area and/or Facility; and (ii) the performance of, or failure to perform, this License, except for risks arising from the negligence or willful misconduct of Licensor, its officials, officers, employees, agents or volunteers. Licensor shall not be liable to Licensee or Licensee's insurer(s) for, and Licensee and its insurer(s) hereby waives and releases Licensor from, any and all loss, liability, fines, penalties, forfeitures, costs or damages resulting from or attributable to an occurrence on or about the Property or the Licensed Area in any way related to the Licensee's operations and activities except for loss, liability, fines, penalties, forfeitures, costs or damages arising from the negligence or willful misconduct of Licensor, its officials, officers, employees, agents or volunteers. Licensee shall immediately notify Licensor of any occurrence on the Licensed Area resulting in injury or death to any person or damage to property of any person.

(c) If it is necessary for Licensee to contract for the design, construction and/or maintenance of the Facility, Licensee shall require each consultant and contractor to indemnify, hold harmless, defend and release Licensor and its officers, officials and employees in accordance

with the terms of the preceding paragraphs. The section shall survive termination, revocation or expiration of this License.

(b) Damage to Licensee's Property. Without limiting the provisions of Section 9.01(b), Licensor and its officers, officials, employees, agents and volunteers shall not be liable for any damage to property entrusted to them, or any of them by Licensee, nor for loss of or damage to any property by theft or otherwise, except for loss or damage arising from the negligence or willful misconduct of Licensor, its officials, officers, employees, agents or volunteers. Licensor shall not be liable for any damages arising from any act or neglect of any other licensee or occupant of the Property, or of any employee, agent, contractor, licensee or invitee of any such licensee or occupant. Licensee shall give prompt notice to Licensor in case of fire or accidents in the Licensed Area or at the Property.

9.02 Insurance.

(a) General. Without limiting Licensee's indemnification of Licensor, Licensee shall provide and maintain at its own expense during the Term the programs of insurance described below, covering its operations hereunder.

(b) Specific Insurance Required.

(i) Licensee shall maintain property insurance in the amount of 100% of the replacement cost of Licensee's equipment and the Facility. This coverage may be self-insured., Licensee shall also carry commercial general liability insurance with coverage at least as broad as Insurance Services Office (ISO) form CG 00 01, with a limit of $2,000,000 per occurrence, $4,000,000 general aggregate, and $2,000,000 products and completed operations. Such liability insurance shall be written on an occurrence, and not a claims made, basis. Licensee shall also provide and maintain in effect statutory worker's compensation insurance and employer's liability insurance with limits of $1,000,000 per each incident, $1,000,000 by disease-policy limit, and $1,000,000 by disease-each employee. Licensee shall also provide Automobile Liability with a combined single limit of $1,000,000 per accident. Evidence of insurance and amendatory endorsements reasonably satisfactory to Licensor shall be provided to Licensor within ten (10) days after the mutual execution of this License. All insurance to be carried by Licensee shall allow and be endorsed primary to, and not contributory with, any similar insurance maintained by Licensor. .

(ii) To the extent permitted by law, any policy or policies of worker's compensation, fire, extended coverage or similar casualty insurance, which either party obtains in connection with the Licensed Area, the Property or the Facility shall include a clause or endorsement denying the insurer any rights of subrogation against the other party to the extent rights have been waived by the insured prior to the occurrence of injury or loss. Each party hereto waives on behalf of itself and its insurers any claim it may have against the other party on account of property damage to its own property (even if caused by the negligent or intentional conduct of such party) if the damage is covered by any policy of insurance required to be provided hereunder.

9.03 Review. The liability insurance requirements may be reviewed by Licensor and Licensee every five (5) years for the purpose of assessing the adequacy of (in consultation with their respective insurance advisors) the limits of such insurance. Such limits shall be reasonable and customary for similar facilities of like size and operation in accordance with generally accepted insurance industry standards. If the parties are unable to mutually agree upon new limits within thirty (30) days of a written demand by one party upon the other, the determination of an independent insurance advisor selected by the parties' insurance advisors shall be binding upon the parties.

9.04 Proof of Coverage. All policies required hereunder shall be with companies having a Best's rating of not less than A-:VII (and if Best's no longer exists, an equivalent rating). Executed copies of certificates and endorsements thereof shall be delivered to Licensor. All insurance policies, except Workers' Compensation and property coverage insurance, required by this **Article 9** shall include Licensor as an additional insured by endorsement as respects this agreement. The Commercial General Liability insurance policy shall provide additional insured coverage on Insurance Services Office (ISO) form CG 20 10 (or equivalent) for ongoing operations and ISO form CG 20 37 (or equivalent) for completed operations. As often as any such policies shall expire or terminate, renewal or additional policies shall be procured and maintained in like manner and to like extent. All policies of insurance must contain a provision that the company writing such policy will give all parties thirty (30) days' advance written notice of any cancellation or lapse of the effective date or any reduction in the amounts of insurance if not replaced. Any available insurance proceeds broader than, or in excess of the specified minimum insurance coverage requirements and/or limits shall be available to the additional insureds. Furthermore, the requirements for coverage and limits shall be (1) the minimum coverage and limits specified; or (2) the broader coverage and maximum limits of coverage of any insurance policy or proceeds available to the named insured; whichever is greater. No representation is made that the minimum insurance requirements are sufficient to cover the obligations of the Licensee.

9.05 Environmental.

(a) For purposes of this License, the term "Hazardous Substances" means: (a) any substance, products, waste, or other material of any nature whatsoever which is or becomes listed, regulated, or addressed pursuant to the Comprehensive Environmental Response, Compensation, and Liability Act (CERCLA), 42 United States Code Section 9601 et seq.; the Resources Conservation and Recovery Act, 42 United States Code Section 6901 et seq.; the Hazardous Materials Transportation Conservation and Recovery Act, 42 United States Code Section 1801 et seq.; the Clean Water Act, 33 United States Code Section 1251 et seq.; the Toxic Substances Control Act, 15 United States Code Section 2601 et seq.; the California Hazardous Waste Control Act, Health and Safety Code Section 25100 et seq.; the Hazardous Substance Account Act, Health and Safety Code Section 25330 et seq.; the California Safe Drinking Water and Toxic Enforcement Act, Health and Safety Code Section 25249.5 et seq.; California Health and Safety Code Section 25280 et seq. (Underground Storage of Hazardous Substances); the California Hazardous Waste Management Act, Health and Safety Code Section 25170.1 et seq.; California Health and Safety Code Section 25501 et seq. (Hazardous Materials Release Response Plans and Inventory); or the California Porter-Cologne Water Quality Control Act, Water Code

Section 13000 et seq., all as amended; or any other federal, state, or local statute, law, ordinance, resolution, code, rule, regulation, order or decree regulating, relating to, or imposing liability or standards of conduct concerning any Hazardous Substance, now or at any time hereinafter in effect; (b) any substance, product, waste or other material of any nature whatsoever which may give rise to liability under any of the above statutes or under any statutory or common law theory based on negligence, trespass, intentional tort, nuisance or strict liability or under any reported decisions of a state or federal court; (c) petroleum or crude oil, other than petroleum and petroleum products which are contained within regularly operated motor vehicles; and (d) asbestos.

(b) Except as otherwise specifically permitted under the terms of this License, Licensee shall not use, create, generate, store, deposit, dispose of or allow any Hazardous Substances on, under, about or within the Property or the Licensed Area in violation of any federal, state, or local law, rule, regulation, order, decree or other requirement listed in this Section 9.05. Licensee shall submit a hazardous materials business plan to the California Environmental Reporting System (CERS) and shall be subject to permitting/inspections by the local Certified Unified Program Agency (CUPA). Batteries for emergency power and fuel for temporary generators during power outages may only be used or stored on-site with the prior written approval of Licensor. On site use, but not storage, of ordinary paints, solvents and similar substances commonly used in small quantities and necessary for maintenance of the Facility are excepted from the preceding prohibition of use by Licensee of Hazardous Substances on the Property, so long as Licensee complies with all applicable federal, state and local laws rules and regulations governing the use of such items.

(c) Unless depicted in Exhibit B, no underground or above ground storage tanks shall be installed on the Licensed Area. If depicted in Exhibit B and duly authorized by Licensor, all underground or above ground storage tanks shall utilize secondary containment at all times.

(d) Licensor or its officers, employees, contractors, or agents shall at all times have the right to go upon and visually inspect the Licensed Area and the operations conducted thereon to assure compliance with the requirements herein stated. This inspection may also include taking samples for chemical analysis of substances and materials present and/or testing soils on the Licensed Area and taking photographs. Except in case of emergency, Licensor will not take samples or test soils on the Licensed Area without providing Licensee with reasonable advance notice and the opportunity to have a representative present.

(e) Licensee shall, within forty-eight (48) hours of the discovery by Licensee of the presence of, or believed presence of, a Hazardous Substance as defined herein, give written notice to Licensor in the event that Licensee knows or has reasonable cause to believe that any release of Hazardous Substance has come or will come to be located on, under, about or within the Licensed Area. The failure to disclose in a timely manner the release of a Hazardous Substance by Licensee, including but not limited to, an amount which is required to be reported to a state or local agency pursuant to law (e.g., California's Hazardous Materials Storage and Emergency Response Act, Health and Safety Code Section 25550 et seq.) shall be grounds for termination of this License by Licensor in addition to actual damages and other remedies provided by law. Licensee shall immediately clean up and completely remove all Hazardous Substances placed by

Licensee on, under, about or within the Licensed Area or the Property, in a manner that is in all respects safe and in accordance with all applicable laws, rules and regulations.

(f) In the event Hazardous Substances are discovered, Licensee shall disclose to Licensor the specific information regarding Licensee's discovery of any Hazardous Substances placed on, under, about or within the Licensed Area or the Property by Licensee, and provide written documentation of its safe and legal disposal.

(g) Breach of any of these covenants, terms, and conditions, and Licensee's failure to cure within thirty (30) days of Licensee's receipt of written notice from Licensor, shall give Licensor the authority to either immediately terminate this License or to shut down Licensee's operations thereon, at the sole discretion of Licensor. In either case, Licensee will continue to be liable under this License to remove and mitigate all Hazardous Substances placed by Licensee on, under, about or within the Licensed Area or the Property. Licensee shall be responsible for, and bear the entire cost of removal and disposal of, all Hazardous Substances introduced to the Licensed Area or the Property by Licensee during Licensee's period of use and possession of the Licensed Area. Upon termination of this License, Licensee shall, in accordance with all laws, remove from the Licensed Area any equipment or improvements placed on the Licensed Area by Licensee that may be contaminated by Hazardous Substances.

ARTICLE 10. TRANSFERS.

10.01 Assignment by Licensee. Licensee shall not in any way assign this License without the prior written consent of Licensor, which consent shall not be unreasonably conditioned, withheld or delayed. If Licensor consents to any assignment, that consent shall not constitute a waiver of any of the restrictions of this Section 10.01 and the same shall apply to each successive proposed assignment related to this License. Licensee shall promptly provide Licensor with all reasonably requested information regarding the assignment, including background and financial information on the proposed assignee. In no event shall Licensor's consent to an assignment affect the continuing duties and obligations of the Licensee under this License. Any assignment in violation of the terms of this Section 10.01, whether voluntary or involuntary, by operation of law, under legal process or proceedings, shall, at Licensor's option in its sole and absolute discretion, be voidable and shall be deemed to constitute an incurable default under this License. If Licensor shall consent to assignment, that assignment shall not be effective until the assignee shall execute, acknowledge and deliver to Licensor an agreement, in form and substance reasonably satisfactory to Licensor, whereby the assignee shall assume all of the obligations of Licensee under this License and the assignee shall agree that the provisions contained in this License shall be deemed controlling over any contrary provisions of the assignment. Upon the assignee's execution of such agreement, Licensee shall be fully released from Licensee's obligations hereunder. The assignment shall be duly executed, and a fully executed copy thereof shall be delivered to Licensor.

10.02 Permitted Transfers. Notwithstanding the provisions of Section 10.01 hereof, Licensee shall have the right, without Licensor's consent, to assign this License to any person that is:

(a) Licensee's parent entity;

(b) A wholly-owned subsidiary of Licensee;

(c) The surviving entity of any merger or consolidation of Licensee;

(d) The purchaser in one transaction of all or substantially all of Licensee's assets and/or outstanding ownership interest; provided, however, that Licensee shall promptly notify Licensor of any such transaction; and/or

(e) The purchaser of the Facility.

10.03 Transfer by Licensor. Licensor shall have the right to freely assign, encumber, sell, lease or otherwise enter into transactions involving the Property, or any portion thereof, and to assign Licensor's rights and obligations under this License; provided that any such transfer or assignment shall fully respect Licensee's rights under this License. Upon any conveyance of the Property (or any portion thereof) or an assignment by Licensor of this License, Licensor shall be entirely released from all liability under any and all of its covenants and obligations contained in or derived from this License, excepting any and all liabilities, duties and obligations of Licensor that arose prior to such conveyance or assignment. Licensee agrees to attorn to any transferee individual or entity purchasing or otherwise acquiring Licensor's interest in the Licensed Area, and to recognize such party as the Licensor under this License, under the terms and conditions set forth herein; provided that any assignment or transfer shall preserve Licensee's rights under the terms of this License. Licensor shall provide Licensee with written notice of any such assignment.

ARTICLE 11. TERMINATION AND REVOCATION RIGHTS, DEFAULTS AND REMEDIES.

11.01 Licensee's Limited Right to Terminate and Revoke. It is understood and agreed that Licensee's ability to use the Property is contingent upon Licensee continually maintaining in full force and effect, after the Commencement Date, all the certificates, permits, and other approvals that are required by any federal, state, or local authorities. In the event that any certificate, permit, license, or approval issued to Licensee is canceled, expires, lapses, or is otherwise withdrawn or terminated by any governmental authority so that Licensee is unable to use the Property for its intended purposes, Licensee may terminate and revoke this License upon ninety (90) days written notice to Licensor, except that those terms that by their nature survive termination or revocation such as Licensee's obligations to remove the Facility and restore the Property, and the indemnity obligation shall survive in accordance with the terms of this License.

11.02 Licensee's Defaults. The occurrence of any one or more of the following events shall constitute a default under this License by Licensee:

(a) The failure by Licensee to make any payment of the License Fee, or any other payment required to be made by Licensee hereunder, within ten (10) days after Licensee's receipt of written notice from Licensor that any such payment is overdue.

(b) Licensee assigns (whether or not such assignment is deemed to be effective) this License or any improvement constructed thereon in violation of this License.

(c) Licensee's failure to complete construction of the Facility prior to the expiration of the Construction Period, subject to events of force majeure pursuant to Section 14.14.

(d) The failure by Licensee to observe or perform any of the express requirements, covenants or provisions of this License to be observed or performed by Licensee, other than as specified in Sections 11.02(a), (b) or (c) hereof, where such failure shall continue for a period of thirty (30) days after Licensee's receipt of written notice thereof from Licensor to Licensee, unless the failure cannot be reasonably cured within such thirty (30) day period, and Licensee shall have commenced the cure of such failure within such thirty (30) day period and thereafter pursues such cure to completion with reasonable diligence. Notwithstanding the foregoing, if Licensor notifies Licensee in writing that a particular failure endangers persons or property, Licensee shall be in default unless Licensee promptly cures the failure.

(e) (i) The making by Licensee of any general assignment for the benefit of creditors; (ii) the filing by or against Licensee of a petition to have Licensee adjudged a bankrupt or a petition for reorganization or arrangement under any law relating to bankruptcy (unless, in the case of a petition filed against Licensee, the same is dismissed within sixty (60) days); (iii) the appointment of a trustee or receiver to take possession of substantially all of Licensee's assets located at the Property or of Licensee's interest in this License, where possession is not restored to Licensee within thirty (30) days; or (iv) the attachment, execution or other judicial seizure of substantially all of Licensee's assets located at the Property or of Licensee's interest in this License where such seizure is not discharged within thirty (30) days.

(f) In addition to any rights that may exist in the License, Licensee may terminate, the License at any time with 90 days prior written notice to Licensor for any or no reason.

11.03 Licensor's Right to Terminate and Revoke. In addition to other rights of termination and revocation Licensor has under this License, Licensor may terminate and revoke this License prior to expiration of the Term in any of the following circumstances:

(a) By giving Licensee thirty (30) days prior written notice, if Licensee fails to maintain and repair the Facility according to the requirements of the License and fails to cure such non-compliance in response to any Licensor request for such repairs within thirty (30) days or within such shorter time specified by Licensor in such written request. Further, if the Facility is in a state of disrepair which imminently endangers the health and safety of Licensor other licensees or occupants of the Property, Licensor may terminate and revoke this License and take steps to address the situation immediately with prior notice to Licensee..

(b) If Licensee fails to pay the License Fee when due, Licensor may, after giving thirty (30) days prior written notice to Licensee, terminate and revoke this License and seek other remedies, as appropriate, under the laws of the State of California, unless Licensee cures such default by payment of the License Fee and accrued interest charges within such notice period.

(c) If Licensee fails to perform or observe any of terms or conditions of this License, Licensor may, after giving sixty (60) days prior written notice to Licensee terminate and revoke this License and seek other remedies, as appropriate, under the laws of the State, unless Licensee cures such default within such notice period.

11.04 Remedies Cumulative. All rights, options and remedies of the parties contained in this License shall be construed and held to be cumulative, and no one of them shall be exclusive of the other, and each party shall have the right to pursue any one or all of such remedies or any other remedy or relief which may be provided by law or in equity, whether or not stated in this License. No waiver of any default hereunder shall be implied from any acceptance of any payment due hereunder or any omission by the non-defaulting party to take any action on account of such default if such default persists or is repeated. Any such waiver must be in writing, and such express waiver shall not affect defaults other than as specified in the waiver. The consent or approval to or of any act requiring the non-defaulting party's consent or approval shall not be deemed to waive or render unnecessary such party's consent or approval to or of any subsequent similar acts by the defaulting party.

ARTICLE 12. INTENTIONALLY OMITTED.

ARTICLE 13. CASUALTY, CONDEMNATION OR RELOCATION

13.01 Casualty. If any damage to or destruction of the Licensed Area or of the Facility located thereon and any improvements associated therewith, which, in Licensee's reasonable opinion, renders the Facility or the Licensed Area unusable or inoperable or renders Licensee's continued use thereof impracticable, Licensee shall have the right, but not the obligation, to terminate this License by giving written notice to Licensor within thirty (30) days after such damage or destruction. If Licensee elects to terminate this License, Licensee shall, within a reasonable period after such termination, remove the damaged Facility thereon and any improvements associated therewith and restore the Licensed Area to its pre-License condition, less reasonable wear and tear, which could not have been avoided by the exercise of reasonable maintenance practices. If Licensee elects to not so terminate this License, Licensee shall, within a reasonable period, make suitable repairs to the Facility, the Licensed Area and any improvements serving the Licensed Area necessitated by any such damage or destruction to the extent and only upon the receipt of any associated insurance proceeds and shall be entitled to use any and all such insurance proceeds to pay for such repairs. In no event shall Licensor be obligated to repair any casualty or other damage or destruction to the Facility and/or the Licensed Area, whether or not covered by Licensor's casualty insurance, if any.

13.02 Condemnation. If a condemning authority takes all or a portion of the Licensed Area which in Licensee's reasonable opinion is sufficient to render the Licensed Area unsuitable for Licensee's intended purpose under this License, then this License shall terminate as of the date when possession is delivered to the condemning authority. All condemnation proceeds attributable to Licensee's interest in the Licensed Area, the Facility and any improvements serving the Licensed Area, shall belong solely to Licensee. Provided that Licensor's award for the Property and the Licensed Area is not decreased by such action, Licensee may separately claim against the

condemning authority for just compensation for the value of Licensee's moving expenses, prepaid License Fee, business dislocation expenses and other losses or expenses as may be incurred. Sale of all or part of the Property by Licensor to a purchaser with the power of eminent domain, in the face of the exercise of its power of eminent domain, shall be treated as a taking by a condemning authority.

13.03 Relocation.

(a) In the event Licensee's improvements to the Licensed Area, or the Licensed Area, are damaged by fire or other perils covered by extended coverage insurance, Licensee agrees to repair the damage, and this License shall remain in full force and effect. In the event the improvements are damaged as a result of any cause other than the perils covered by fire and extended coverage insurance, either Party shall have the option to give notice to the other Party at any time within one hundred eighty (180) days after such damage, terminating and revoking this License as of the date specified in such notice (which date shall be no more than thirty (30) days after the giving of such notice). In the event such notice is given, this License shall expire and all interest of Licensee in the Licensed Area shall terminate on the date so specified in such notice and the License fee, reduced by a proportionate reduction, based upon the extent, if any, to which such damage interfered with the business carried on by Licensee in the Licensed Area, shall be paid up to date of such termination.

(b) It is understood and agreed that during the Term of the License, Licensor may need to redevelop the Property. In the event Licensor redevelops the Property, Licensee agrees that Licensor may require Licensee to relocate the Licensed Area to other locations on the Property, relocation will be restricted to once during the term of the License, such location being at Licensor's sole and absolute discretion (the "**Replacement Licensed Area**"); provided, however, the Replacement Licensed Area shall be similar to the current Licensed Area in size and compatible for Licensee's Facility. Licensor shall provide one (1) year notice of relocation request. Licensee also agrees that it shall cause such relocation to be accomplished within the one (1) year after Licensor delivers to Licensee written notice from Licensor requesting Licensee to relocate, including obtaining all Governmental Approvals required for the relocation. Licensee further agrees that any and all costs attributable to such relocation shall be borne and paid for by Licensee; provided, however, in lieu of relocating, Licensee shall have the option of terminating and revoking this License by providing Licensor with written notice of its election to do so and removing all component parts of the Licensee's Facility from the Licensed Area prior to the date Licensor required Licensee to complete the relocation of the Property. Licensee shall be permitted to operate a temporary facility at the Property (e.g. cell on wheels) in a location reasonably approved by Licensor during any such relocation; provided that Licensee has obtained all required Governmental Approvals. Licensee hereby WAIVES ALL RELOCATION RIGHTS AND BENEFITS UNDER CALIFORNIA LAW IN CONNECTION WITH ANY SUCH RELOCATION OR LEASE TERMINATION.

ARTICLE 14. MISCELLANEOUS.

14.01 Proprietary and Governmental Roles; Actions by City. Except where clearly and expressly provided otherwise in this License, the capacity of the Licensor in this License shall be as owner and licensor only ("**Proprietary Capacity**"), and any obligations or restrictions imposed by this License on the Licensor shall be limited to that capacity and shall not relate to, constitute a waiver of, supersede or otherwise limit or affect its governmental capacities, including enacting laws, inspecting structures, reviewing and issuing permits, and all of the other legislative and administrative or enforcement functions pursuant to federal, state or local law ("**Governmental Capacity**"). When acting in its Proprietary Capacity, discretionary actions may be undertaken by the City Manager or other designees as designated by the City Manager to the extent otherwise provided for in this License. In addition, nothing in this License shall supersede or waive any discretionary or regulatory approvals required to be obtained from the Licensor under applicable law, nor guarantee that the Licensor, in its Governmental Capacity, will grant any particular request for a license, permit or other regulatory approval. Licensee understands that the Licensor may grant or deny such request in its sole discretion and may impose such terms and conditions as it deems consistent with that discretion and applicable law.

14.02 Attorneys' Fees. If any action or arbitration is brought by either Party hereto as against the other Party hereto for the enforcement or declaration of any rights or remedies in or under this License or for the breach of any covenant or condition of this License, then and in that event the prevailing Party shall be entitled to recover, and the other Party agrees to pay, all reasonable fees and costs to be fixed by the court or arbitrator therein including, but not limited to, reasonable attorneys' fees.

14.03 Notices. All notices, requests, payments of rent, demands, and other communications required or permitted hereunder shall be given as follows:

For Notices of Default to Licensee:
(a) To Licensee's Lease Administration Department at NoticeIntake@att.com; and
(b) To Licensee's Law Department via First Class certified or registered mail, return receipt requested, or by a nationally recognized overnight courier, postage prepaid:

New Cingular Wireless PCS, LLC
Attn.: Legal Dept - Network Operations
Site No. CCL03977; Cell Site Name: DT PIEDMONT (CA)
Fixed Asset: 10087905
208 S. Akard Street
Dallas, TX 75202-4206

For Notices of Default to Licensor:
(a) To Licensor at
City of Piedmont
Attn: City Administrator
120 Vista Avenue

Piedmont, CA 94611
Email: cityclerk@piedmont.ca.gov

(b) To Licensor's Law Department via First Class certified or registered mail, return receipt requested, or by a nationally recognized overnight courier, postage prepaid:

Burke, Williams and Sorensen, LLP
Attn: Deepa Sharma, Piedmont City Attorney
1901 Harrison Street, STE. 900
Oakland, CA 94612
Facsimile: 510-839-9104

All other Notices will be sent:
(a) To Licensee's Lease Administration Department at NoticeIntake@att.com; and
(b) To Licensor at

City of Piedmont
Attn: City Administrator
120 Vista Avenue
Piedmont, CA 94611
Email: cityclerk@piedmont.ca.gov

Notices by email will be effective on the first calendar day after it was sent unless the sender receives an automated message that the email has not been delivered. Electronic mail shall be sent with a read receipt, but a read receipt shall not be required to establish that notice was given and received. All other Notices shall be effective when received unless returned undelivered. Either party hereto may change the place for the giving of notice to it by thirty (30) days' prior written notice to the other party hereto as provided herein.

14.04 Waiver. No waiver of any breach of any of the terms, covenants, agreements, restrictions, or conditions of this License shall be construed to be a waiver of any succeeding breach of the same or other terms, covenants, agreements, restrictions, and conditions hereof.

14.05 Surrender. Upon the expiration or sooner termination of the Term of this License, and notwithstanding anything herein contained to the contrary, Licensee shall surrender to Licensor the Licensed Area, and, subject to the provisions of Sections 7.03 and 7.04, and Article 13 hereof, the improvements then situated thereon.

14.06 Binding. Subject to the restrictions set forth herein regarding assignment, each of the terms, covenants, and conditions of this License shall extend to and be binding on and shall inure to the benefit of not only Licensor and Licensee, but to each of their respective successors, and assigns.

14.07 Licensor's Right to Enter the Licensed Area. Licensor and its authorized representatives shall have the right to enter the Licensed Area at all reasonable times, after giving

Licensee one business day prior written notice, for any of the following purposes: (a) to determine whether the Licensed Area is in good condition and whether Licensee is complying with its obligations under this License; and (b) to do any necessary maintenance and to make any restoration to the Licensed Area that Licensor has the right or obligation to perform. Notwithstanding the foregoing, in the event of an emergency, Licensor may enter the Licensed Area for the foregoing purposes without giving Licensee prior written notice.

Licensor shall not be liable in any manner for any inconvenience, disturbance, loss of business, nuisance, or other damage arising out of Licensor's entry on the Licensed Area as provided in this Section other than those caused by Licensor's or its agents or contractors sole negligence or willful misconduct.

Licensee shall not be entitled to an abatement or reduction of the License Fee if Licensor exercises any rights reserved in this Section; provided however, that Licensor's exercising of such rights does not materially affect Licensee's rights under this License.

14.08 [Reserved]

14.09 Interpretation. The titles to the Sections of this License are not a part of this License and shall have no effect upon the construction or interpretation of any part of this License. It is the intent of the Parties that this License not be construed to convey to Licensee any interest or estate whatsoever in the Property or the Licensed Area (other than a mere license to use the Licensed Area), nor to create any landlord-tenant relationship between the Parties, or create any type of tenancy whatsoever. Licensee agrees that it will never contest Licensor's title or interest in the Property and the Licensed Area, nor assert any claim thereto beyond the revocable license granted to it hereunder.

14.10 Covenants and Conditions. Each term and each provision, including, without limitation, the obligation for the payment of the License Fee, to be performed by Licensee or Licensor, as the case may be, shall be construed to be both a covenant and a condition of this License.

14.11 Force Majeure. If performance by a Party of any portion of this License is made impossible by any prevention, delay, or stoppage caused by strikes; lockouts; labor disputes; acts of God; inability to obtain services, labor, or materials or reasonable substitutes for those items; government actions; civil commotions; fire or other casualty; epidemic or pandemic; or other causes beyond the reasonable control of the Party obligated to perform, performance by that Party for a period equal to the period of that prevention, delay, or stoppage is excused.

14.12 Integration. This License and the exhibits and documents incorporated by reference, constitutes the entire agreement between the Parties and there are no conditions, representations, or agreements regarding the matters covered by this License which are not expressed herein.

14.13 Modification. This License shall not be varied or modified in any way, except by an instrument in writing, executed by the Parties hereto.

14.14 Mutual Consent. Wherever in this License the consent or approval of Licensor and/or Licensee is required, it is agreed that such consent or approval shall not be unreasonably withheld, conditioned or delayed, unless otherwise specified herein.

14.15 Governing Law. This License shall be governed by and construed according to the laws of the State of California applicable to agreements made and entirely performed therein. Venue in any action on this Agreement shall be in the courts of Alameda County, California.

14.16 Executing Authority. The Parties have full power and authority to enter into this License and complete their respective responsibilities and duties contemplated by this License.

14.17 Time. Time is of the essence with respect to each and every term and condition of this Agreement.

[Signatures on following page.]

LICENSEE:

New Cingular Wireless PCS, LLC, a Delaware limited liability company

By: AT&T Mobility Corporation
Its: Manager

Dated: _____

By:_____
Name:
Title:

LICENSOR:

City of Piedmont,
a California municipal corporation

Dated: _____

By:_____
Name: Rosanna Bayon Moore
Title: City Administrator

Attest: _____

Anna Brown, City Clerk

Approved as to Form:

_____
Deepa Sharma, City Attorney

EXHIBIT A

PROPERTY DESCRIPTION

The land described herein is situated in the State of California, County of Alameda, City of Piedmont, and is described as follows:

120 Vista Avenue, Piedmont, California 94611, and also known as Assessor's Parcel No. 050-4625-001-03

EXHIBIT B

CITY APPROVED PLANS INCLUDING ALL SPECIFICATIONS AND ALL LAND USE APPROVALS

FILE

NOTE: IF WORK IS TO BE PERFORMED WITH CONSTRUCTION CREWS USING ROOF AS ACCESS AREA, A PRE & POST CONSTRUCTION INSPECTION OF THE ROOF MUST BE PERFORMED BY A ROOFING CONTRACTOR CHOSEN BY THE CITY OF PIEDMONT. CONTACT THE PIEDMONT PUBLIC WORKS DEPARTMENT FOR MORE INFORMATION.

SITE NUMBER: CCL03977
SITE NAME: AWE - DT PIEDMONT
FA NUMBER: 10087900
PACE NUMBER: MRSFR001048/MRSFR016668
PTN NUMBER: 3701014572/3701569922
PROJECT: LTE 1C/2C
SITE TYPE: TOWER (INDOOR)
SITE ADDRESS: 120 VISTA AVE
PIEDMONT, CA 94611

NOTE: 48 HOUR NOTICE REQUIRED PRIOR TO ACCESS TO ROOF WITH CONSTRUCTION LIFT. CONTACT CITY CLERK'S OFFICE AT 510.420.3040 OR JTULLOCH@ci.PIEDMONT.CA.US

at&t
5001 EXECUTIVE PKWY,
SAN RAMON, CA 94583

Vinculums
575 LENNON LANE, SUITE 125
WALNUT CREEK, CA 94598

BREEN Engineering Inc
6281 BEACH BLVD. #125
BUENA PARK, CALIFORNIA 90621
TEL: (657) 529-2111
WWW.BREENENG.COM

UNDERGROUND SERVICE ALERT OF SOUTHERN CALIFORNIA
800-227-2600
48 HOURS BEFORE YOU DIG

SITE INFORMATION

PROPERTY OWNER:	CITY OF PIEDMONT 120 VISTA AVE PIEDMONT, CA 94611
APPLICANT: ADDRESS:	AT&T 5001 EXECUTIVE PKWY, SAN RAMON, CA 94583
APPLICANT REPRESENTATIVE: ADDRESS:	VINCULUMS SERVICES 575 LENNON LANE, SUITE 125 WALNUT CREEK, CA 94598
LATITUDE (NAD 83):	37° 49' 16.6" N (37.821473°)
LONGITUDE (NAD 83):	122° 13' 29.2" W (-122.224767°)
GROUND ELEVATION:	390'-0" AGL
OCCUPANCY:	TELECOMMUNICATIONS FACILITY
CONSTRUCTION TYPE:	II-B
APN #:	50-4625-1-3
ZONING JURISDICTION:	CITY OF PIEDMONT
CURRENT ZONING:	U-2

PROJECT TEAM

APPLICANTS REPRESENTATIVE:
VINCULUMS SERVICES
575 LENNON LANE, SUITE 125
WALNUT CREEK, CA 94598
CONTACT: JEREMY KENNISH
PHONE: (206) 265-2213
EMAIL: JKENNISH@VINCULUMS.COM

ENGINEER:
BREEN ENGINEERING INC.
6281 BEACH BLVD. #125
BUENA PARK, CA 90621
CONTACT: LUIS CARDONA
PHONE: (657) 529-2111
EMAIL: LCARDONA@BREENENG.COM

APPLICANT:
5001 EXECUTIVE PARKWAY
SAN RAMON, CA. 94583

LOCATION MAPS

VICINITY MAP

LOCAL MAP

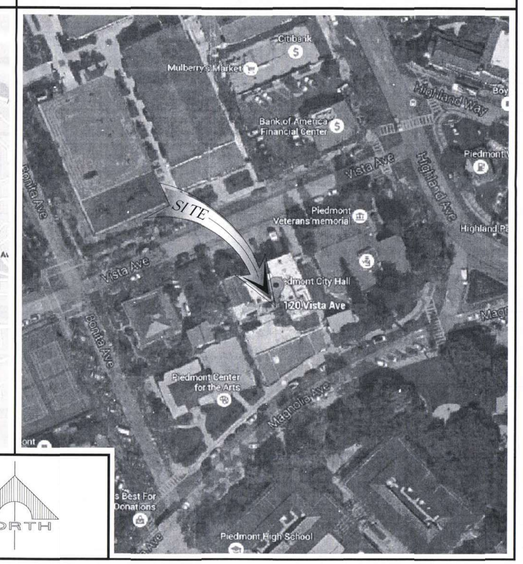

DRIVING DIRECTIONS

DIRECTIONS FROM AT&T OFFICE: HEAD NORTHEAST ON BISHOP DR TOWARD SUNSET DR, TURN RIGHT ONTO SUNSET DR, USE THE RIGHT 2 LANES TO TURN RIGHT ONTO BOLLINGER CANYON RD, USE THE RIGHT 2 LANES TO MERGE ONTO I-680 N VIA THE RAMP TO SACRAMENTO, CONTINUE ON I-680 N, TAKE CA-24 W TO MORAGA AVE IN OAKLAND. TAKE EXIT 4 FROM CA-13 S, MERGE ONTO I-580 N, USE THE RIGHT 2 LANES TO TAKE EXIT 46A FOR STATE ROUTE 24 TOWARD OAKLAND/LAFAYETTE, CONTINUE ONTO CA-24 W, KEEP LEFT AT THE FORK TO STAY ON CA-24 W, TAKE EXIT 5A FOR HAYWARD TOWARD CALIFORNIA 13 S, MERGE ONTO CA-13 S, TAKE EXIT 4 FOR MORAGA AVENUE W, TAKE ESTATES DR, HARBORD DR AND MOUNTAIN AVE TO LINCOLN AVE IN PIEDMONT, MERGE ONTO MORAGA AVE, TURN LEFT ONTO ESTATES DR, TURN RIGHT ONTO MCANDREW DR, TURN LEFT ONTO HARBORD DR, TURN LEFT ONTO BLAIR AVE, TURN LEFT ONTO MOUNTAIN AVE, TURN LEFT ONTO SEA VIEW AVE, TURN RIGHT ONTO LINCOLN AVE.

DO NOT SCALE DRAWINGS

SUBCONTRACTOR SHALL VERIFY ALL PLANS & EXISTING DIMENSIONS & CONDITIONS ON THE JOB SITE & SHALL IMMEDIATELY NOTIFY THE ENGINEER IN WRITING OF ANY DISCREPANCIES BEFORE PROCEEDING WITH THE WORK OR BE RESPONSIBLE FOR SAME.

IF USING 11"X17" PLOT, DRAWINGS WILL BE HALF SCALE

PROJECT DESCRIPTION

AT&T WIRELESS PROPOSES TO MODIFY AN EXISTING APPROVED WIRELESS FACILITY.
THE SCOPE WILL CONSIST OF THE FOLLOWING:

- REMOVE 2 (E) 2' PANEL ANTENNAS AND REPLACE WITH 2 (N) 2' HEXPORT PANEL ANTENNAS (1 PER SECTOR).
- REMOVE 2 (E) TMAs AND REPLACE WITH 2 (N) DTMAs (1 PER SECTOR).
- REMOVE 6 (E) RRUS-22 AND REPLACE WITH 2 (N) RRUS-11.
- REMOVE (E) BTS CABINET.
- REMOVE 2 (E) PBC-02.
- INSTALL 2 (N) LTE 1C RRUS-11 INSIDE LEASE AREA (1 PER SECTOR).
- INSTALL 2 (N) LTE 2C RRUS-12 INSIDE LEASE AREA (1 PER SECTOR).
- INSTALL (N) RBA72 POWER CABINET.
- INSTALL 2 (N) DIPLEXERS.
- INSTALL (N) 6601 V2 CHASSIS WITHIN (E) CABINET.
- INSTALL (N) DUS-41 WITHIN (N) CHASSIS.
- INSTALL (N) FIBER TRUNKS.
- INSTALL (N) FIBER TRUNKS.
- INSTALL 1 (N) PURCELL CABINET.
- REUSE (E) COAX CABLES.

REVIEWED CG 5-3-16

DRAWING INDEX

SHEET NO:	SHEET TITLE
T-1	TITLE SHEET
GN-1	GENERAL NOTES
A-1	SITE PLAN
A-2	ROOF PLAN AND EQUIPMENT LAYOUT PLAN
A-3	ANTENNA LAYOUT PLAN AND ANTENNA & RRU SPECS
A-4	ELEVATIONS
A-5	ELEVATIONS
A-6	EQUIPMENT SPECS & DETAILS
E-1	GROUNDING PLAN AND NOTES
E-2	GROUNDING DETAILS

BUILDING INSPECTION SERVICES DEPT.
APPROVED
Subject to all City and State laws or Ordinances; also all state & city licenses; all field inspections, and all notations hereon. This approval in no way validates any violation of any local or state law.
5/9/16
Building Inspector
B16-00349
CITY OF PIEDMONT

CODE COMPLIANCE

ALL WORKS AND MATERIALS SHALL BE PERFORMED AND INSTALLED IN ACCORDANCE WITH THE CURRENT EDITIONS OF THE FOLLOWING CODES AS ADOPTED BY THE LOCAL GOVERNING AUTHORITIES. NOTHING IN THESE PLANS IS TO BE CONSTRUED TO PERMIT WORK NOT CONFORMING TO THE LATEST EDITIONS OF THE FOLLOWING CODES.

1. 2013 CALIFORNIA BUILDING CODE
2. 2013 CALIFORNIA ELECTRICAL CODE ADOPTED 2008 NEC
3. 2013 CALIFORNIA FIRE CODE
4. 2013 CALIFORNIA MECHANICAL CODE
5. 2013 CALIFORNIA PLUMBING CODE
6. 2010 CALIFORNIA ENERGY CODE
7. COUNTY COASTAL ZONE LAND USE ORDINANCE-TITLE 23
8. COUNTY FIRE CODE ORDINANCE – TITLE 16
9. COUNTY LAND USE ORDINANCE – TITLE 22
10. COUNTY BUILDING AND CONSTRUCTION ORDINANCE – TITLE 19

REV	DATE	DESCRIPTION
1	03/21/16	100% CONSTRUCTION DRAWINGS
0	02/26/16	90% CONSTRUCTION DRAWINGS

REGISTERED PROFESSIONAL ENGINEER
LUIS CARDONA
NO. C41035
EXP. 03-17
CIVIL
STATE OF CALIFORNIA

IT IS A VIOLATION OF LAW FOR ANY PERSON, UNLESS THEY ARE ACTING UNDER THE DIRECTION OF A LICENSED PROFESSIONAL ENGINEER, TO ALTER THIS DOCUMENT.

CCL03977
AWE – DT PIEDMONT
120 VISTA AVE.,
PIEDMONT, CA 94611
TOWER (INDOOR)

SHEET TITLE
TITLE SHEET

SHEET NUMBER
T-1

PERMIT NO. B16-00349

ABBREVIATIONS

AB	ANCHOR BOLT
AC	ASPHALTIC CONCRETE
A/C	AIR CONDITIONING
ADJ	ADJUSTABLE
A.F.F.	ABOVE FINISH FLOOR
ARCH	ARCHITECTURAL
APPROX	APPROXIMATELY
A.G.L.	ABOVE GRADE LEVEL
A.M.S.L.	ABOVE MEAN SEA LEVEL
BD	BOARD
BLDG	BUILDING
BLKG	BLOCKING
BOT	BOTTOM
BSMT	BASEMENT
BTS	BASE TRANSCEIVER STATION
C	COURSE(S)
CEM	CEMENT
CL	CHAIN LINK
CLG	CEILING
CLR	CLEAR
COL	COLUMN
CONC	CONCRETE
CONST	CONSTRUCTION
CONT	CONTINUOUS
CORR	CORRIDOR
CO	CONDUIT ONLY
DIA	DIAMETER
DBL	DOUBLE
DEPT	DEPARTMENT
DEMO	DEMOLITION
DIM	DIMENSION
DN	DOWN
DR	DOOR
DTL	DETAIL
DWG	DRAWING
(E)	EXISTING
EA	EACH
ELEC	ELECTRIC
ELEV	ELEVATION
EQUIP	EQUIPMENT
EXP	EXPANSION
EXT	EXTERIOR
FA	FIRE ALARM
FB	FLAT BAR
FF	FINISH FLOOR
FH	FLAT HEAD
FIN	FINISH(ED)
FLR	FLOOR
FOS	FACE OF STUDS
FS	FINISH SURFACE
FT	FOOT, FEET
FTG	FOOTING
FW	FINISH WALL
F.G.	FINISH GRADE
FUT	FUTURE
GA	GAUGE
GALV	GALVANIZED
GL	GLASS
GR	GRADE
GYP	GYPSUM
GFCI	GROUND FAULT CIRCUIT INTERRUPT
GND	GROUND
HC	HOLLOW CORE
HDW	HARDWARE
HTR	HEATER
HM	HOLLOW METAL
HORIZ	HORIZONTAL
HR	HOUR
HT	HEIGHT
HV	HIGH VOLTAGE
ID	INSIDE DIMENSION
INS	INSULATION
INT	INTERIOR
JT	JOINT
LAM	LAMINATED
LBS	POUNDS
LT	LIGHT
LA	LIGHTNING ARRESTOR
LNA	LOW NOISE AMPLIFIER
MFR	MANUFACTURER
MAT	MATERIAL
MAX	MAXIMUM
MECH	MECHANICAL
MIN	MINIMUM
MISC	MISCELLANEOUS
ML	METAL LATH
MO	MASONRY OPENING
MS	MACHINE SCREW
MTD	MOUNTED
MTL	METAL
(N)	NEW
NIC	NOT IN CONTRACT
NO	NUMBER
NTS	NOT TO SCALE
OA	OVERALL
O.C.	ON CENTER
OPNG	OPENING
OPP	OPPOSITE
PARTN	PARTITION
PL	PLATE
PLAS	PLASTER
PLYWD	PLYWOOD
POC	POINT OF CONNECTION
PROP	PROPERTY
PT	PRESSURE TREATED
R	RISER
REQD	REQUIRED
RD	ROOF DRAIN
RM	ROOM
RMS	ROOMS
RO	ROUGH OPENING
SC	SOLID CORE
SCHED	SCHEDULE
SECT	SECTION
SHT	SHEET
SIM	SIMILAR
SPECS	SPECIFICATIONS
SS	STAINLESS STEEL
STL	STEEL
STOR	STORAGE
STRUCT	STRUCTURAL
SUSP	SUSPENDED
SW	SWITCH
SWBD	SWITCHBOARD
THK	THICK
TI	TENANT IMPROVEMENT
TMA	TOWER MOUNTED AMPLIFIER
TOS	TOP OF SURFACE
TS	TUBE STEEL
TYP	TYPICAL
UNO	UNLESS NOTED OTHERWISE
VCT	VINYL COMPOSITION TILE
VERT	VERTICAL
V.I.F.	VERIFY IN FIELD
VG	VERTICAL GRAIN
W/	WITH
WD	WOOD
WR	WATER RESISTANT
WT	WEIGHT
XFMR	TRANSFORMER
@	AT
[	CHANNEL
℄	CENTERLINE
∠	ANGLE
⅊	PROPERTY LINE

SYMBOLS:

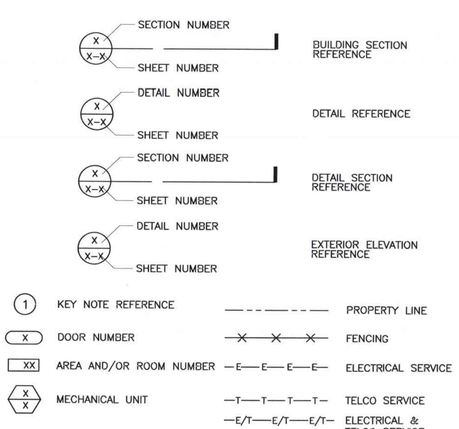

GENERAL:

1. THESE NOTES SHALL BE CONSIDERED A PART OF THE WRITTEN SPECIFICATIONS.

2. THE CONTRACTOR SHALL NOTIFY ARCHITECT/ENGINEER OF ANY ERRORS, OMISSIONS, OR DISCREPANCIES AS THEY MAY BE DISCOVERED IN THE PLANS, SPECIFICATIONS, AND NOTES PRIOR TO STARTING CONSTRUCTION. INCLUDING BUT NOT LIMITED BY DEMOLITION. THE CONTRACTOR SHALL BE RESPONSIBLE FOR CORRECTING ANY ERRORS, OMISSION, OR INCONSISTENCY AFTER THE START OF CONSTRUCTION WHICH HAS NOT BEEN BROUGHT TO THE ATTENTION OF THE ARCHITECT/ENGINEER AND SHALL INCUR ANY EXPENSES TO RECTIFY THE SITUATION. THE METHOD OF CORRECTION SHALL BE APPROVED BY THE ARCHITECT/ENGINEER.

3. PRIOR TO STARTING CONSTRUCTION THE CONTRACTOR HAS THE RESPONSIBILITY TO LOCATE ALL EXISTING UTILITIES, WHETHER OR NOT SHOWN ON THE PLANS, AND TO PROTECT THEM FROM DAMAGE. THE CONTRACTOR OR SUBCONTRACTOR SHALL BEAR THE EXPENSE OF REPAIRING OR REPLACING ANY DAMAGE TO THE UTILITIES CAUSED DURING THE EXECUTION OF THE WORK.

4. A COPY OF THE APPROVED PLANS SHALL BE KEPT IN A PLACE SPECIFIED BY THE GOVERNING AGENCY, AND BY LAW SHALL BE AVAILABLE FOR INSPECTION AT ALL TIMES. IT IS THE CONTRACTORS RESPONSIBILITY TO ENSURE ALL CONSTRUCTION SETS REFLECT THE SAME INFORMATION AS THE APPROVED PLANS. THE CONTRACTOR SHALL ALSO MAINTAIN ONE SET OF PLANS AT THE SITE FOR THE PURPOSE OF DOCUMENTING ALL AS-BUILT CHANGES, REVISIONS, ADDENDUM'S, OR CHANGE ORDERS. THE CONTRACTOR SHALL FORWARD THE AS-BUILT DRAWINGS TO THE ARCHITECT/ENGINEER AT THE CONCLUSION OF THE PROJECT.

5. THE CONTRACTOR SHALL BE RESPONSIBLE FOR THE COMPLETE SECURITY OF THE SITE FROM START OF PROJECT TO COMPLETION OF PROJECT.

6. THE CONTRACTOR IS RESPONSIBLE TO PROVIDE TEMPORARY POWER, WATER, AND TOILET FACILITIES.

7. ALL CONSTRUCTION THROUGH THE PROJECT SHALL CONFORM TO THE 2013 C.B.C. AND ALL THE OTHER LATEST GOVERNING CODES.

8. THE CONTRACTOR SHALL BE RESPONSIBLE FOR COMPLYING WITH ALL SAFETY PRECAUTIONS AND REGULATIONS DURING THE WORK. THE ENGINEER WILL NOT ADVISE ON NOR PROVIDE DIRECTION AS TO SAFETY PRECAUTIONS AND PROGRAMS.

9. THE CONTRACTOR SHALL SUPERVISE AND COORDINATE ALL WORK, USING HIS PROFESSIONAL KNOWLEDGE AND SKILLS. HE IS SOLELY RESPONSIBLE FOR ALL CONSTRUCTION MEANS, METHODS, TECHNIQUES, PROCEDURES AND SEQUENCING AND COORDINATING ALL PORTIONS OF THE WORK.

10. THE CONTRACTOR SHALL BE RESPONSIBLE TO OBTAIN AND PAY FOR ALL PERMITS, LICENSES AND INSPECTIONS WITH RESPECT TO THE WORK TO COMPLETE THE PROJECT. BUILDING PERMIT APPLICATIONS SHALL BE FILED BY THE OWNER OR HIS REPRESENTATIVE. CONTRACTOR SHALL OBTAIN THE PERMIT AND MAKE FINAL PAYMENT OF SAID DOCUMENT.

11. ALL DIMENSIONS TAKE PRECEDENCE OVER SCALE UNLESS NOTED OTHERWISE.

12. THE CONTRACTOR SHALL PROVIDE ALL NECESSARY BLOCKING, BACKING, FRAMING, HANGERS OR SUPPORTS FOR INSTALLATION OF ITEMS INDICATED ON THE DRAWINGS.

13. THE CONTRACTOR SHALL PROVIDE THE FIRE MARSHALL APPROVED MATERIALS TO FILL/SEAL PENETRATIONS THROUGH FIRE RATED ASSEMBLIES.

14. NEW CONSTRUCTION ADDED TO EXISTING CONSTRUCTION SHALL BE MATCHED IN FORM, TEXTURE, MATERIAL AND PAINT COLOR UNLESS NOTED OTHERWISE IN THE PLANS.

15. WHERE SPECIFIED, MATERIALS TESTING SHALL BE TO THE LATEST STANDARDS AVAILABLE AS REQUIRED BY THE LOCAL GOVERNING AGENCY RESPONSIBLE FOR RECORDING THE RESULTS.

16. ALL GENERAL NOTES AND STANDARD DETAILS ARE THE MINIMUM REQUIREMENTS TO BE USED IN CONDITIONS WHICH ARE NOT SPECIFICALLY SHOWN OTHERWISE.

17. ALL DEBRIS AND REFUGE IS TO BE REMOVED FROM THE PROJECT DAILY. PREMISES SHALL BE LEFT IN A CLEAN BROOM FINISHED CONDITION AT ALL TIMES.

18. ALL SYMBOLS AND ABBREVIATIONS ARE CONSIDERED CONSTRUCTION INDUSTRY STANDARDS. IF A CONTRACTOR HAS A QUESTION REGARDING THEIR EXACT MEANING THE ARCHITECT/ENGINEER SHALL BE NOTIFIED FOR CLARIFICATIONS.

19. THE ENGINEER SHALL NOT BE RESPONSIBLE FOR THE METHODS, TECHNIQUES AND SEQUENCES OF PROCEDURES TO PERFORM THE WORK. THE SUPERVISION OF THE WORK IS THE SOLE RESPONSIBILITY OF THE CONTRACTOR.

20. CONTRACTORS SHALL VISIT THE SITE PRIOR TO BID TO ASCERTAIN CONDITIONS WHICH MAY ADVERSELY AFFECT THE WORK OR COST THEREOF.

21. THE CONTRACTOR SHALL FIELD VERIFY THE DIMENSION, ELEVATION, ETC. NECESSARY FOR THE PROPER CONSTRUCTION AND ALIGNMENT OF THE NEW PORTION OF THE WORK TO THE EXISTING WORK. THE CONTRACTOR SHALL MAKE ALL MEASUREMENTS NECESSARY FOR FABRICATION AND ERECTION OF STRUCTURAL MEMBERS. ANY DISCREPANCY SHALL BE IMMEDIATELY BROUGHT TO THE ATTENTION OF THE ARCHITECT/ENGINEER.

22. ALL EXISTING ACTIVE SEWER, WATER, GAS, ELECTRIC, AND OTHER UTILITIES WHERE ENCOUNTERED IN THE WORK, SHALL BE PROTECTED AT ALL TIMES, AND WHERE REQUIRED FOR THE PROPER EXECUTION OF THE WORK, SHALL BE RELOCATED AS DIRECTED BY ENGINEERS. EXTREME CAUTION SHOULD BE USED BY THE CONTRACTOR WHEN EXCAVATING OR PIER DRILLING AROUND OR NEAR UTILITIES.

23. ALL EXISTING INACTIVE SEWER, WATER, GAS, ELECTRIC AND OTHER UTILITIES, WHICH INTERFERE WITH THE EXECUTION OF THE WORK, SHALL BE REMOVED AND SHALL BE CAPPED, PLUGGED OR OTHERWISE DISCONTINUED AT POINTS WHICH WILL NOT INTERFERE WITH THE EXECUTION OF THE WORK, SUBJECT TO THE APPROVAL OF THE ENGINEER.

24. NO CHANGES ARE TO BE MADE TO THESE PLANS WITHOUT THE KNOWLEDGE AND WRITTEN CONSENT OF THE ARCHITECT/ENGINEER. UNATHORIZED CHANGES RENDER THESE DRAWINGS VOID.

25. ANY REFERENCE TO THE WORDS APPROVED, OR APPROVAL IN THESE DOCUMENTS SHALL BE HERE DEFINED TO MEAN GENERAL ACCEPTANCE OR REVIEW AND SHALL NOT RELIEVE THE CONTRACTOR AND/OR HIS SUB-CONTRACTORS OF ANY LIABILITY IN FURNISHING THE REQUIRED MATERIALS OR LABOR SPECIFIED.

26. IT SHALL BE THE RESPONSIBILITY OF THE CONTRACTOR TO LOCATE ALL EXISTING UTILITIES WHETHER SHOWN HEREON OR NOT, AND TO PROTECT THEM FROM DAMAGE. THE CONTRACTOR SHALL BEAR ALL EXPENSE OF REPAIR OR REPLACEMENT IN CONJUNCTION WITH THE EXECUTION OF THIS WORK. GENERAL CONTRACTOR SHALL NOTIFY THE ENGINEER AND ARCHITECT IMMEDIATELY OF ANY DISCREPANCIES FOUND WITHIN THE CONTRACT DOCUMENTS, PRIOR TO STARTING WORK.

SITE PREPARATION NOTES:

1. THE PREPARATION OF THE SITE FOR CONSTRUCTION SHALL INCLUDE THE REMOVAL OF ALL BROKEN CONCRETE, TREE TRUNKS AND ANY OTHER DEBRIS THAT WOULD BE DAMAGING TO THE FOOTINGS OF THE NEW STRUCTURE.

2. BACK FILLING AT TRENCHES SHALL BE OF CLEAN, STERILE SOIL HAVING A SAND EQUIVALENT OF 30 OR GREATER. BACK FILLING SHALL BE DONE IN 8 INCH LAYERS, MOISTURE CONDITIONED AND PROPERLY COMPACTED. ADEQUATE DRAINAGE SHALL BE PROVIDED SUCH THAT NO PONDING OCCURS.

3. ALL FOUNDATION FOOTINGS SHALL EXTEND INTO AND BEAR AGAINST NATURAL UNDISTURBED SOIL OR APPROVED COMPACTED FILL. FOOTINGS SHALL EXTEND INTO SOIL DEPTH AS INDICATED IN PLANS.

4. SHOULD ANY LOOSE FILL, EXPANSIVE SOIL, GROUND WATER OR ANY OTHER UNEXPECTED CONDITIONS BE ENCOUNTERED DURING THE EXCAVATION FOR THE NEW FOUNDATION, THE ARCHITECT/ENGINEER SHALL BE NOTIFIED AND ALL FOUNDATION WORK SHALL CEASE IMMEDIATELY.

5. WITHIN AN AREA A MINIMUM OF 5 FEET BEYOND THE BUILDING LIMITS, EXCAVATE A MINIMUM OF 4" OF EXISTING SOIL. REMOVE ALL ORGANICS, PAVEMENT, ROOTS, DEBRIS AND OTHERWISE UNSUITABLE MATERIAL.

6. THE SURFACE OF THE EXPOSED SUBGRADE SHALL BE INSPECTED BY PROBING OR TESTING TO CHECK FOR POCKETS OF SOFT OR UNSUITABLE MATERIAL. EXCAVATE UNSUITABLE SOIL AS DIRECTED BY THE GEOTECHNICAL ENGINEER/TESTING AGENCY.

7. PROOFROLL THE SURFACE OF THE EXPOSED SUBGRADE WITH A LOADED TANDEM AXLE DUMP TRUCK. REMOVE ALL SOILS WHICH PUMP OR DO NOT COMPACT PROPERLY AS DIRECTED BY THE GEOTECHNICAL ENGINEER/TESTING AGENCY.

8. FILL ALL EXCAVATED AREAS WITH APPROVED CONTROLLED FILL. PLACE IN 8" LOOSE LIFTS AND THE MAXIMUM DRY DENSITY IN ACCORDANCE WITH ASTM D-698. COMPACT TO A MINIMUM OF 90% RELATIVE COMPACTION.

9. THE STRUCTURAL DRAWINGS HERE IN REPRESENT THE FINISHED STRUCTURE. THE CONTRACTOR SHALL PROVIDE ALL TEMPORARY GUYING AND BRACING REQUIRED TO ERECT AND HOLD THE STRUCTURE IN PROPER ALIGNMENT UNTIL ALL STRUCTURAL WORK AND CONNECTIONS HAVE BEEN COMPLETED. THE INVESTIGATION, DESIGN, SAFETY, ADEQUACY AND INSPECTION OF ERECTION BRACING, SHORING, TEMPORARY SUPPORTS, ETC. IS THE SOLE RESPONSIBILITY OF THE CONTRACTOR.

10. PRIOR TO STARTING CONSTRUCTION, THE CONTRACTOR SHALL PROTECT ALL AREAS FROM DAMAGE WHICH MAY OCCUR DURING CONSTRUCTION. ANY DAMAGE TO NEW OR EXISTING SURFACES, STRUCTURES OR EQUIPMENT SHALL BE IMMEDIATELY REPAIRED OR REPLACED TO THE SATISFACTION OF THE PROPERTY OWNER. THE CONTRACTOR SHALL BEAR THE EXPENSE OF REPAIRING OR REPLACING ANY DAMAGED AREAS.

11. WHEN REQUIRED STORAGE OF MATERIALS OCCURS, THEY SHALL BE EVENLY DISTRIBUTED OVER THE FLOOR OR ROOF SO AS NOT TO EXCEED THE DESIGNED LIVE LOADS FOR THE STRUCTURE. TEMPORARY SHORING OR BRACING SHALL BE PROVIDED WHERE THE STRUCTURE OR SOIL HAS NOT ATTAINED THE DESIGN STRENGTH FOR THE CONDITIONS PRESENT.

12. PRIOR TO PROCEEDING WITH ANY WORK WITHIN THE EXISTING FACILITY, THE CONTRACTOR SHALL FAMILIARIZE HIMSELF WITH EXISTING STRUCTURAL AND OTHER CONDITIONS. IT SHALL BE THE CONTRACTOR'S RESPONSIBILITY TO PROVIDE ALL NECESSARY BRACING, SHORING AND OTHER SAFEGUARDS TO MAINTAIN ALL PARTS OF THE EXISTING WORK IN A SAFE CONDITION DURING THE PROCESS OF DEMOLITION AND CONSTRUCTION AND TO PROTECT FROM DAMAGE THOSE PORTIONS OF THE EXISTING WORK WHICH ARE TO REMAIN.

SUBMITTALS:

SUBMITTALS FOR SHOP DRAWINGS, MILL TESTS, PRODUCT DATA, ECT. FOR ITEMS DESIGNED BY THE ARCHITECT/ENGINEER OF RECORD SHALL BE MADE TO THE ARCHITECT/ENGINEER PRIOR TO CONSTRUCTION. THE CONTRACTOR SHALL REVIEW THE SUBMITTAL BEFORE FORWARDING TO THE ARCHITECT. SUBMITTALS SHALL BE MADE IN ADVANCED TO ARCHITECT-ENGINEER. SUBMITTALS REQUIRED FOR EACH SECTION OF THESE NOTES ARE SPECIFIED IN THAT SECTION.

SHOP DRAWING REVIEW:

REVIEW BY THE ARCHITECT/ENGINEER IS FOR GENERAL COMPLIANCE WITH THE DESIGN CONCEPT AND THE CONTRACT DOCUMENTS. MARKINGS OR COMMENTS SHALL NOT BE CONSTRUED AS RELIEVING THE CONTRACTOR FROM COMPLIANCE WITH THE PROJECT PLANS AND SPECIFICATIONS, NOR DEPARTURES THEREFROM. THE CONTRACTOR REMAINS RESPONSIBLE FOR DETAILS AND ACCURACY, FOR CONFIRMING AND CORRELATING ALL QUANTITIES AND DIMENSIONS, FOR SELECTION FABRICATION PROCESSES.

ACCESSIBILITY NOTE:

THE TELECOMMUNICATIONS EQUIPMENT SPACE SHOWN HEREON THESE PLANS IS NOT CUSTOMARILY OCCUPIED. WORK TO BE PERFORMED IN THIS FACILITY CANNOT REASONABLY BE PERFORMED BY PERSONS WITH A SEVERE IMPAIRMENT: MOBILITY, SIGHT, AND/OR HEARING. THEREFORE, PER 2013 C.B.C. CHAPTER 11B, THIS FACILITY SHALL BE EXEMPTED FROM ALL TITLE 24 ACCESS REQUIREMENTS.

BID WALK NOTES:

1. CONTRACTOR TO FIELD VERIFY ALL EXISTING CONSTRUCTION CONDITIONS BEFORE SUBMITTAL OF FINAL BIDS, START OF CONSTRUCTION AND/OR FABRICATION. AFTER THOROUGHLY EXAMINING THE PLANS AND EXISTING SITE CONDITIONS NOTIFY THE ENGINEER IN WRITING OF ANY DISCREPANCIES OR ANY ITEMS NEEDING CLARIFICATIONS PRIOR TO SUBMITTING FINAL BIDS.

2. IF THE ENGINEER IS NOT NOTIFIED OF ANY DISCREPANCIES OR CLARIFICATIONS IN WRITING AS DESCRIBED IN #1 IT WILL BE CONFIRMED THAT THE CONTRACTOR HAS CONSIDERED ALL ITEMS THAT WILL AFFECT THE COST OF THE CONSTRUCTION OF THE SITE UNDER THE MOST STRINGENT CONDITIONS. THE CONTRACTOR WILL NOT BE ENTITLED TO ANY ADDITIONAL COMPENSATION AFTER THE FINAL BIDS HAVE BEEN SUBMITTED AND AWARDED FROM THE CARRIER.

STRUCTURAL STEEL:

1. ALL MATERIALS AND WORKMANSHIP SHALL BE IN ACCORDANCE WITH THE LATEST REVISED EDITION OF THE AISC MANUAL OF STEEL CONSTRUCTION, WHICH INCLUDES THE SPECIFICATION FOR STRUCTURAL STEEL BUILDINGS, THE CODE OF STANDARD PRACTICE AND THE AWS STRUCTURAL WELDING CODE. IDENTIFY AND MARK STEEL PER AISC 14TH EDITION AND C.B.C. 2013.

2. STRUCTURAL STEEL SHOP DRAWINGS SHALL BE REVIEWED BY THE ENGINEER/ARCHITECT PRIOR TO FABRICATION.

3. GROUTING OF COLUMN BASE PLATES: BASE PLATES SHALL BE DRYPACKED OR GROUTED WITH NON-SHRINK, NON-FERROUS GROUT. MINIMUM COMPRESSIVE STRENGTH SHALL BE 4,000 PSI AT 28 DAYS. ALL SURFACES SHALL BE PROPERLY CLEANED OF FOREIGN MATERIAL PRIOR TO GROUTING.

4. ALL EXPOSED WELDS SHALL BE FILLED AND GROUND SMOOTH WHERE METAL COULD COME IN CONTACT WITH THE PUBLIC.

5. NO HOLES OTHER THAN THOSE SPECIFICALLY DETAILED SHALL BE ALLOWED THRU STRUCTURAL STEEL MEMBERS. BOLT HOLES SHALL CONFORM TO AISC SPECIFICATION, AND SHALL BE STANDARD HOLES UNLESS NOTED OTHERWISE. NO CUTTING OR BURNING OF STRUCTURAL STEEL WILL BE PERMITTED WITHOUT PRIOR CONSENT OF THIS ENGINEER.

6. WELDING: CONFORM TO AWS D1 1. WELDERS SHALL BE CERTIFIED IN ACCORDANCE WITH WABO REQUIREMENTS. USE E70 ELECTRODES OF TYPE REQUIRED FOR MATERIALS TO BE WELDED.

7. BOLTING: ASTM A307 BOLTS SHALL BE INSTALLED "SNUG TIGHT" PER AISC. SECTION RCSC 8(C) ASTM A325 BOLTS SHALL CONFORM TO THE RCSC SPECIFICATION SECTION 8 (D).

8. FABRICATION: CONFORM TO AISC SPECIFICATION SEC M2 "FABRICATION" AND AISC CODE SEC 6 "FABRICATION AND DELIVERY" PERFORM WORK ON PREMISES OF A FABRICATOR APPROVED BY THE BUILDING OFFICIAL.

9. GALVANIZING: ALL EXPOSED STEEL OUTSIDE THE BUILDING ENVELOPE SHALL BE HOT-DIPPED GALVANIZED. APPLY FIELD TOUCH-UPS PER SPECIFICATIONS. PER ASTM A153.

10. MATERIALS: CONFORM TO

ANCHOR BOLTS (HEADED):	ASTM A307
ANCHOR BOLTS (J-TYPE):	ASTM A36
BARS AND PLATES:	ASTM A36
BOLTS:	ASTM A307
C-, M-, AND ANGLE SHAPES:	ASTM A36
DEFORMED WELDED WIRE FABRIC:	ASTM A497
EPOXY AND EXPANSION ANCHORS:	HILTI OR EQUIVALENT
GROUT:	EMBECO OR EQUIVALENT
HIGH-STRENGTH BOLTS:	ASTM A325SC OR (A325N)
OTHER STRUCTURAL SHAPES:	ASTM A36
REINFORCING BARS:	ASTM A615. GRADE 60, DEFORMED BARS
SMOOTH WELDED WIRE FABRIC:	ASTM A185
STRUCTURAL WF SHAPES:	ASTM A572-GR50
STEEL PIPE:	ASTM A53, GRADE B
TIE WIRE:	16.5 GAGE OR HEAVIER, BLACK ANNEALED
TUBE STEEL AND PIPE COLUMS:	ASTM A500, GRADE B
WELDING ELECTRODES:	E70XX
W - SHAPES:	ASTM A992, GRADE 50

11. HOLES IN STEEL SHALL BE DRILLED OR PUNCHED. ALL SLOTTED HOLES SHALL BE PROVIDED WITH SMOOTH EDGES. BURNING OF HOLES AND TORCH CUTTING AT THE SITE IS NOT PERMITTED.

12. ALL FRAMING CONNECTORS SUCH AS CONCRETE ANCHORS, HOLD-DOWNS, POST BASES, FRAMING CAPS, HANGER AND OTHER MISCELLANEOUS STRUCTURAL METALS SHALL BE AS MANUFACTURED BY SIMPSON STRONG TIE CO. OR APPROVED EQUAL.

INSPECTION SERVICES DEPT.
APPROVED
Subject to all City and State Laws or Ordinances; also all state & city licenses; all field inspections, tests and notations hereon.
This approval in no way validates any violation of any local or state law.
RH 5/5/16
Building Inspector
B16-00349
CITY OF PIEDMONT

at&t
5001 EXECUTIVE PKWY,
SAN RAMON, CA 94583

Vinculums
575 LENNON LANE, SUITE 125
WALNUT CREEK, CA 94598

BREEN Engineering Inc
6261 BEACH BLVD. #125
BUENA PARK, CALIFORNIA 90621
TEL: (657) 529-2111
WWW.BREENENG.COM

REV	DATE	DESCRIPTION
1	03/21/16	100% CONSTRUCTION DRAWINGS
0	02/26/16	90% CONSTRUCTION DRAWINGS

REGISTERED PROFESSIONAL ENGINEER
PAUL D. FINAL
NO. C41035
EXP. 03-17
CIVIL
STATE OF CALIFORNIA

IT IS A VIOLATION OF LAW FOR ANY PERSON, UNLESS THEY ARE ACTING UNDER THE DIRECTION OF A LICENSED PROFESSIONAL ENGINEER, TO ALTER THIS DOCUMENT.

CCL03977
AWE - DT PIEDMONT
120 VISTA AVE.,
PIEDMONT, CA 94611
TOWER (INDOOR)

SHEET TITLE
GENERAL NOTES

SHEET NUMBER
GN-1

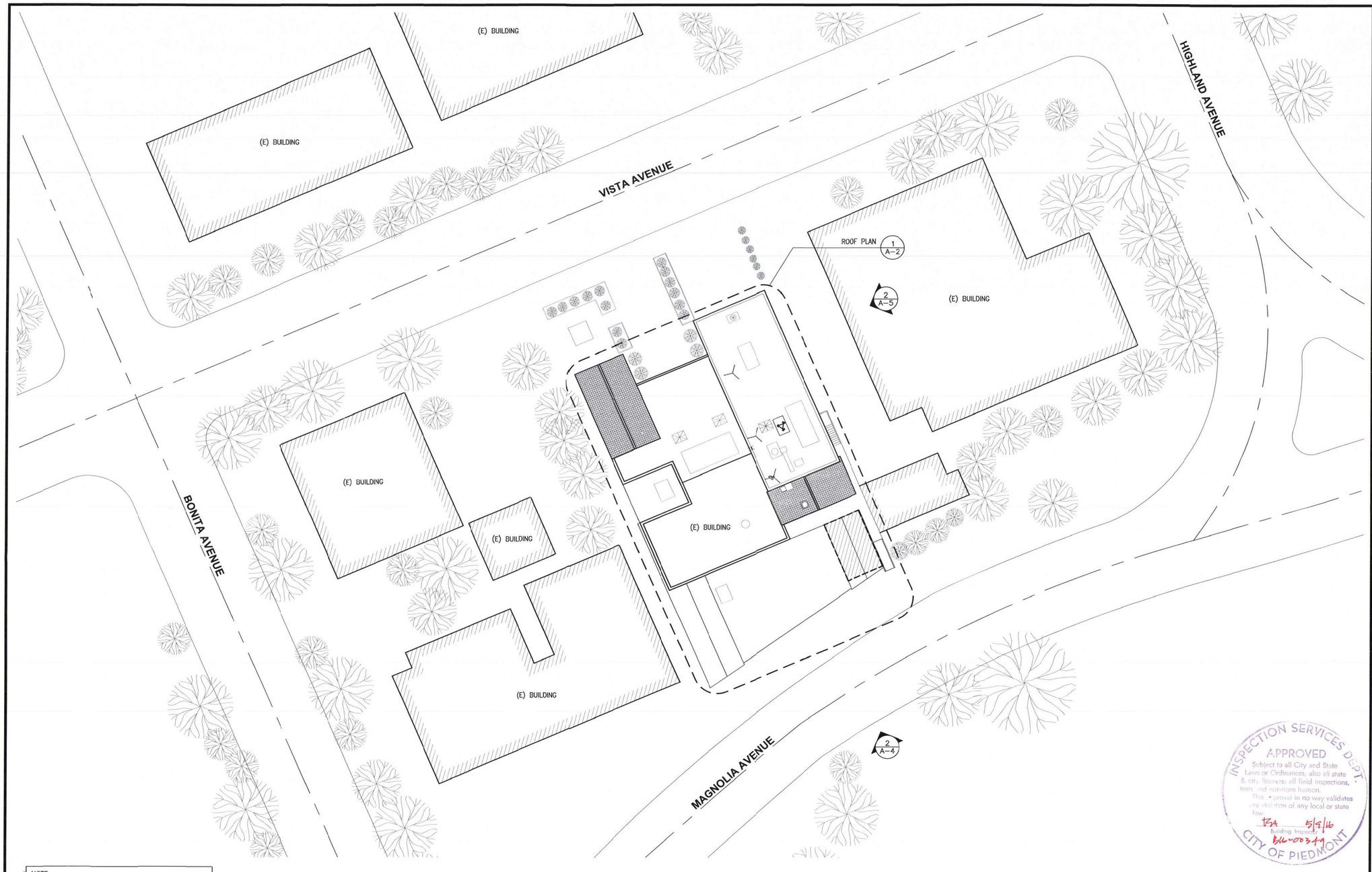

NOTE:
THESE DRAWINGS HAVE BEEN CREATED BY INFORMATION GATHERED AT THE SITE, (E) AS-BUILTS PROVIDED BY AT&T AND WITHOUT A SURVEY. PLEASE VERIFY ALL DIMENSIONS, LENGTHS, PROPERTY LINES AND CONDUIT RUNS.

INSPECTION SERVICES DEPT.
APPROVED
Subject to all City and State Laws or Ordinances; also all state & city licenses; all field inspections, tests and notations hereon.
This approval in no way validates any violation of any local or state law.
TSA 5/9/16
Building Inspector
BLD-00344
CITY OF PIEDMONT

SITE PLAN

SCALE: 1"=20'-0" 10' 20' 40'

1

at&t
5001 EXECUTIVE PKWY,
SAN RAMON, CA 94583

Vinculums
575 LENNON LANE, SUITE 125
WALNUT CREEK, CA 94598

BREEN Engineering Inc
6281 BEACH BLVD. #125
BUENA PARK, CALIFORNIA 90621
TEL: (657) 529-2111
WWW.BREENENG.COM

REV	DATE	DESCRIPTION
1	03/21/16	100% CONSTRUCTION DRAWINGS
0	02/25/16	90% CONSTRUCTION DRAWINGS

REGISTERED PROFESSIONAL ENGINEER
NO. C41035
EXP. 03-17
CIVIL
STATE OF CALIFORNIA

IT IS A VIOLATION OF LAW FOR ANY PERSON, UNLESS THEY ARE ACTING UNDER THE DIRECTION OF A LICENSED PROFESSIONAL ENGINEER, TO ALTER THIS DOCUMENT.

CCL03977
AWE – DT PIEDMONT
120 VISTA AVE.,
PIEDMONT, CA 94611
TOWER (INDOOR)

SHEET TITLE
SITE PLAN

SHEET NUMBER
A-1

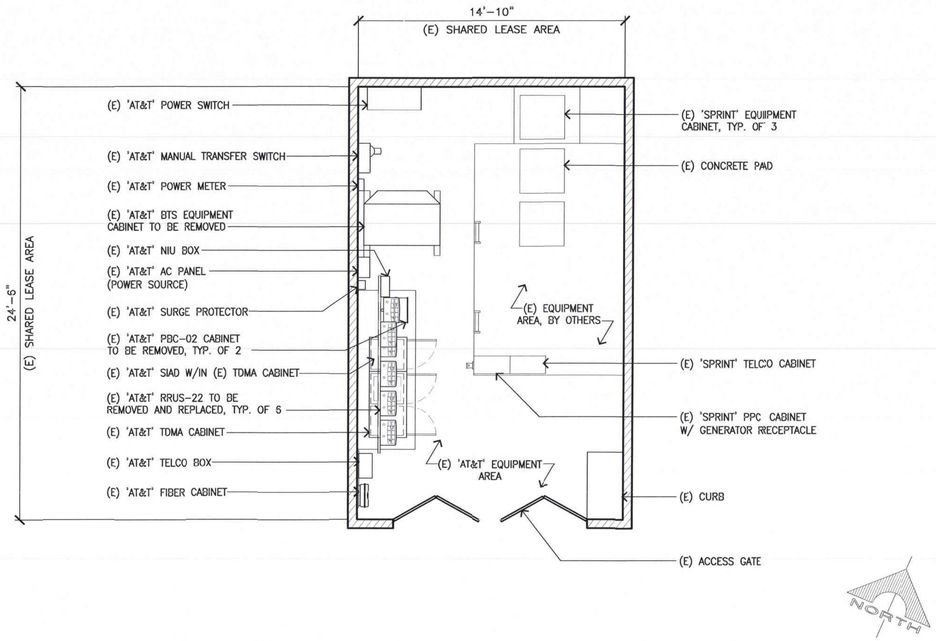

(E) EQUIPMENT LAYOUT PLAN

SCALE: 1/4"=1'-0" 2' 4' 8' **2**

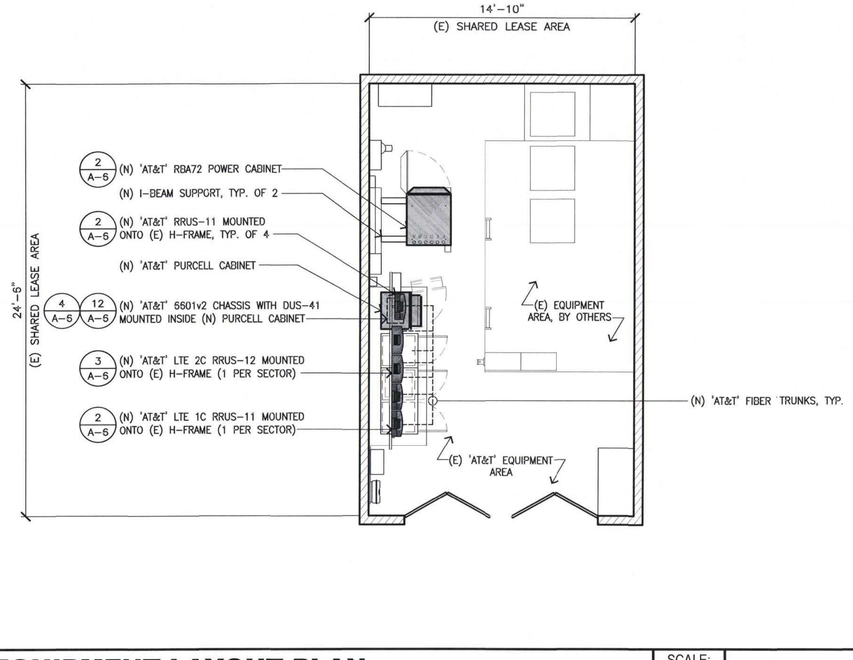

(N) EQUIPMENT LAYOUT PLAN

SCALE: 1/4"=1'-0" 2' 4' 8' **3**

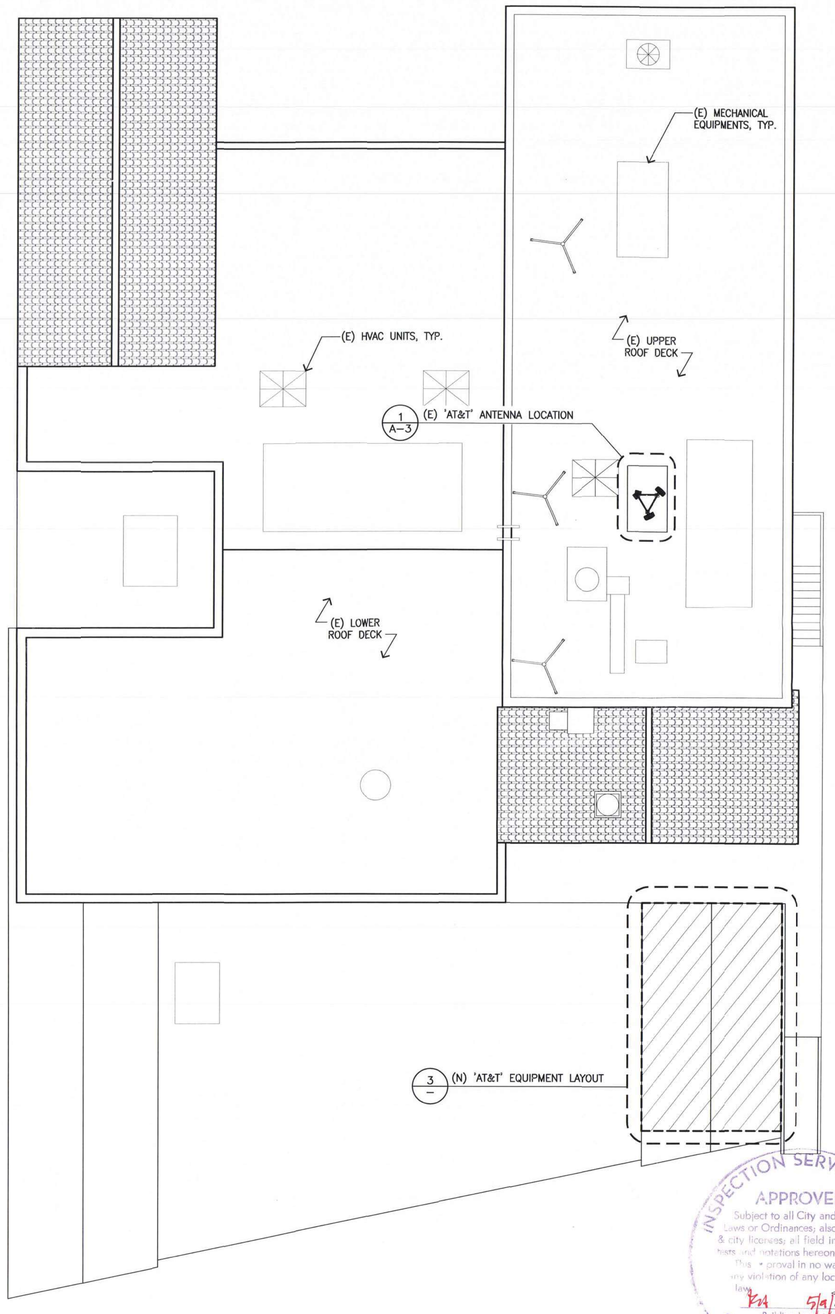

INSPECTION SERVICES DEPT. APPROVED Subject to all City and State Laws or Ordinances; also all state & city licenses; all field inspections, tests and notations hereon. This approval in no way validates any violation of any local or state law. Building Inspector 5/9/16 B16-00349 CITY OF PIEDMONT

ROOF PLAN

SCALE: 1/8"=1'-0" 4' 8' 16' **1**

at&t
5001 EXECUTIVE PKWY,
SAN RAMON, CA 94583

Vinculums
575 LENNON LANE, SUITE 125
WALNUT CREEK, CA 94598

BREEN Engineering Inc
5281 BEACH BLVD. #125
BUENA PARK, CALIFORNIA 90621
TEL: (657) 529-2111
WWW.BREENENG.COM

REV	DATE	DESCRIPTION
1	03/21/16	100% CONSTRUCTION DRAWINGS
0	02/26/16	90% CONSTRUCTION DRAWINGS

REGISTERED PROFESSIONAL ENGINEER
ERIK E. SPINA
NO. C41035
EXP. 03-17
CIVIL
STATE OF CALIFORNIA

IT IS A VIOLATION OF LAW FOR ANY PERSON, UNLESS THEY ARE ACTING UNDER THE DIRECTION OF A LICENSED PROFESSIONAL ENGINEER, TO ALTER THIS DOCUMENT.

CCL03977
AWE - DT PIEDMONT
120 VISTA AVE.,
PIEDMONT, CA 94611
TOWER (INDOOR)

SHEET TITLE
ROOF PLAN AND EQUIPMENT LAYOUT PLAN

SHEET NUMBER
A-2

OPTIMUM ANTENNA AND TRANSMISSION CABLE REQUIREMENTS (VERIFY WITH CURRENT RFDS)

	SECTOR	TECHNOLOGY		ANTENNA MODEL		ANTENNA AZIMUTH		RAD CENTER		TRANSMISSION CABLE	
		EXIST	PROP	EXISTING	PROPOSED	EXISTING	PROPOSED	EXIST	PROP	LENGTH	PART NUMBER
ALPHA SECTOR	A1	UMTS/GSM	UMTS/ LTE 1C/2C	ALAN DICK DFX-CS65-32/18-0/0	FILTRONIC P6T2BF-V1	20°	20°	56'-7"	56'-7"	160'	COAX
	A2										
	A3										
	A4										
BETA SECTOR	B1	UMTS/GSM	UMTS/ LTE 1C/2C	ALAN DICK DFX-CS65-32/18-0/0	FILTRONIC P6T2BF-V1	130°	130°	56'-7"	56'-7"	160'	COAX
	B2										
	B3										
	B4										
GAMMA SECTOR	C1	N/A									
	C2										
	C3										
	C4										
DELTA SECTOR	D1	N/A									
	D2										
	D3										
	D4										

REMOTE RADIO UNITS (RRU'S)

	SECTOR	RRU TYPE	(E)	(N)	RRU LOCATION (DISTANCE FROM ANTENNA)	MINIMUM CLEARANCES			DC CABLE		
						ABOVE	BELOW	SIDES	QTY	LENGTH	AWG
ALPHA SECTOR	A1	ERICSSON RRUS-11 (700 MHz)		1	±140'	16"	8"	8"	1	±10'	8
	A1	ERICSSON RRUS-12 (1900 MHz)		1	±140'	16"	8"	8"	1	±10'	8
	A2										
	A3										
BETA SECTOR	B1	ERICSSON RRUS-11 (700 MHz)		1	±140'	16"	8"	8"	1	±10'	8
	B1	ERICSSON RRUS-12 (1900 MHz)		1	±140'	16"	8"	8"	1	±10'	8
	B2										
	B3										
GAMMA SECTOR	C1	N/A									
	C2										
	C3										
	C4										
DELTA SECTOR	D1	N/A									
	D2										
	D3										
	D4										

ANTENNA AND RRU SPECS NTS **3**

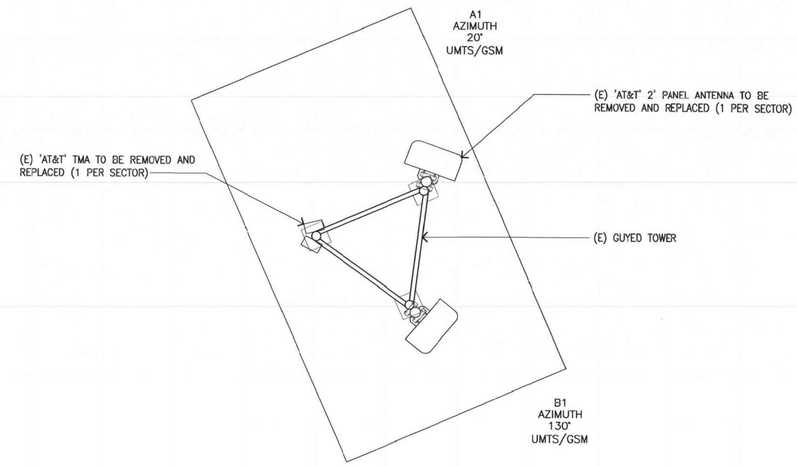

(E) ANTENNA LAYOUT PLAN SCALE: 3/4"=1'-0" 1' 2' 4' **1**

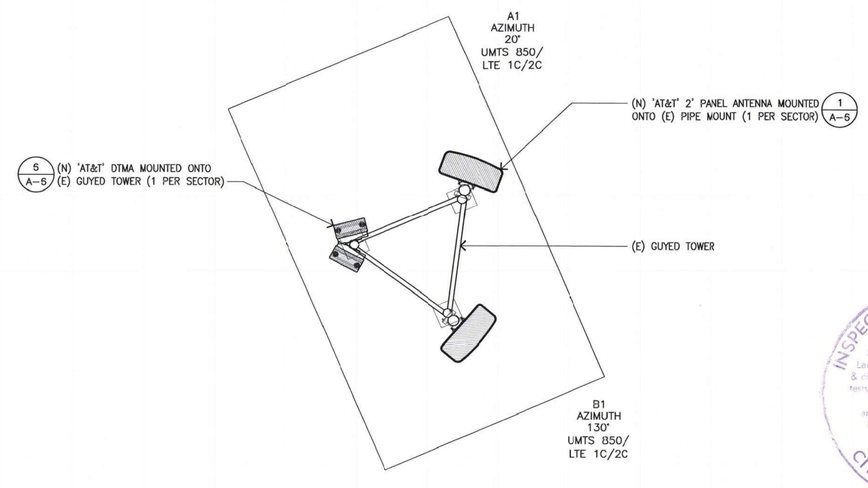

INSPECTION SERVICES DEPT.
APPROVED
Subject to all City and State Laws or Ordinances; also all state & city licenses; all field inspections, tests and notations hereon.
This approval in no way validates any violation of any local or state law.
Building Inspector
5/9/16
B16-00349
CITY OF PIEDMONT

(N) ANTENNA LAYOUT PLAN SCALE: 3/4"=1'-0" 1' 2' 4' **2**

at&t
5001 EXECUTIVE PKWY,
SAN RAMON, CA 94583

Vinculums
575 LENNON LANE, SUITE 125
WALNUT CREEK, CA 94598

BREEN Engineering Inc
5281 BEACH BLVD. #125
BUENA PARK, CALIFORNIA 90621
TEL:(657) 529-2111
WWW.BREENENG.COM

REV	DATE	DESCRIPTION
1	03/21/16	100% CONSTRUCTION DRAWINGS
0	02/26/16	90% CONSTRUCTION DRAWINGS

REGISTERED PROFESSIONAL ENGINEER
RAJU GARG
NO. C41035
EXP. 03-17
CIVIL
STATE OF CALIFORNIA

IT IS A VIOLATION OF LAW FOR ANY PERSON, UNLESS THEY ARE ACTING UNDER THE DIRECTION OF A LICENSED PROFESSIONAL ENGINEER, TO ALTER THIS DOCUMENT.

CCL03977
AWE - DT PIEDMONT
120 VISTA AVE.,
PIEDMONT, CA 94611
TOWER (INDOOR)

SHEET TITLE
ANTENNA LAYOUT PLAN AND ANTENNA & RRU SPECS

SHEET NUMBER
A-3

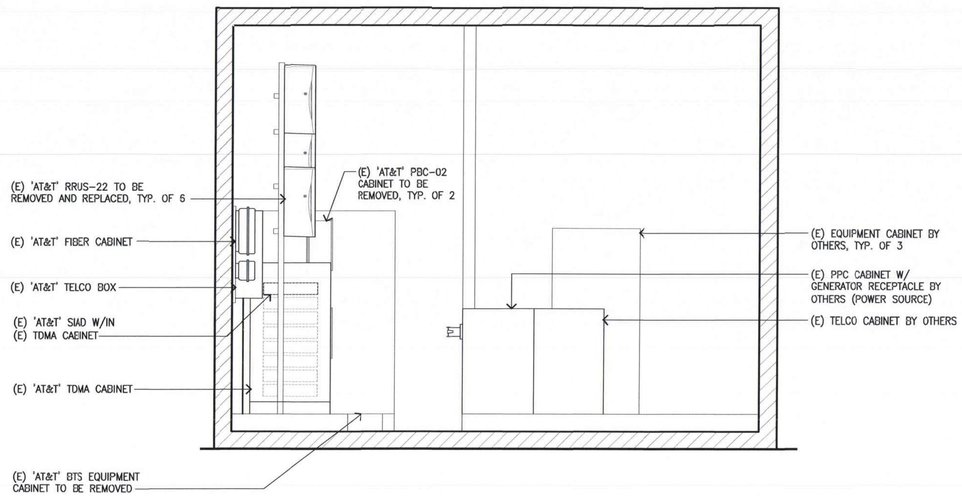

(E) SOUTH ELEVATION DETAIL

SCALE: 1/2"=1'-0" 1' 2' 4' **3**

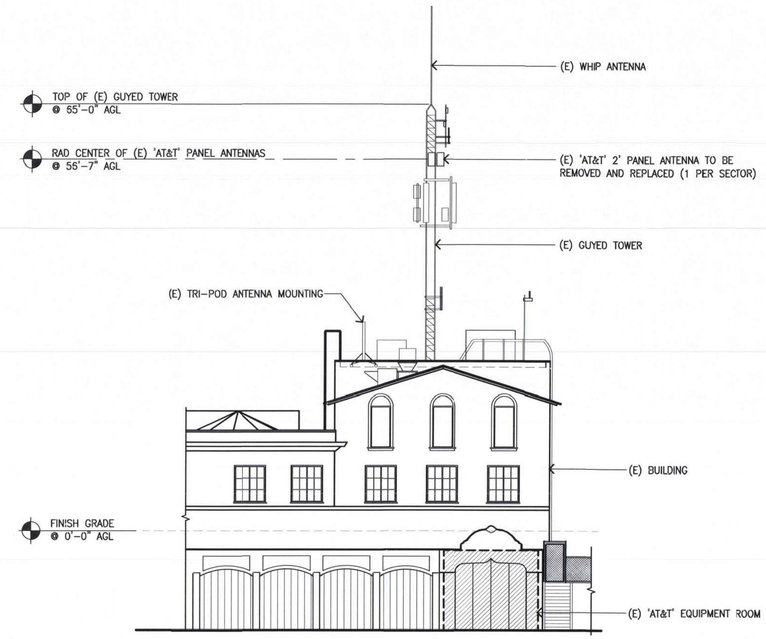

(E) SOUTH ELEVATION

SCALE: 3/32"=1'-0" 4' 8' 20' **1**

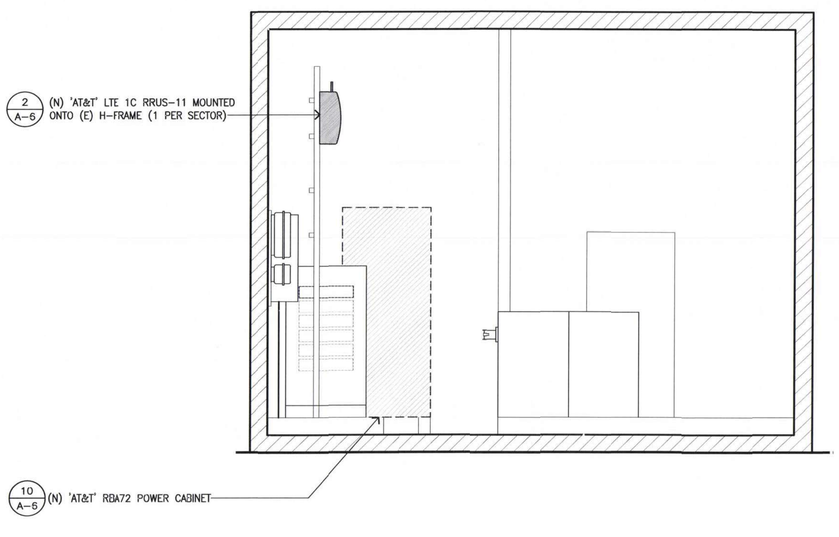

(N) SOUTH ELEVATION DETAIL

SCALE: 1/2"=1'-0" 1' 2' 4' **4**

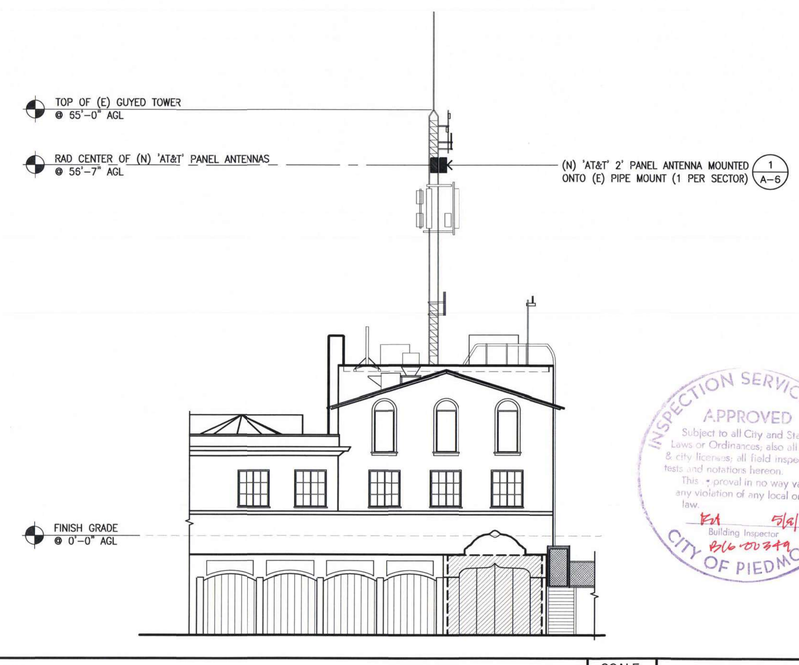

(N) SOUTH ELEVATION

SCALE: 3/32"=1'-0" 4' 8' 20' **2**

INSPECTION SERVICES DEPT.
APPROVED
Subject to all City and State Laws or Ordinances; also all state & city licenses; all field inspections, tests and notations hereon.
This approval in no way validates any violation of any local or state law.
Building Inspector
5/9/16
B16-00349
CITY OF PIEDMONT

at&t
5001 EXECUTIVE PKWY,
SAN RAMON, CA 94583

Vinculums
575 LENNON LANE, SUITE 125
WALNUT CREEK, CA 94598

BREEN Engineering Inc
6281 BEACH BLVD. #125
BUENA PARK, CALIFORNIA 90621
TEL: (657) 529-2111
WWW.BREENENG.COM

REV	DATE	DESCRIPTION
1	03/21/16	100% CONSTRUCTION DRAWINGS
0	02/26/16	90% CONSTRUCTION DRAWINGS

REGISTERED PROFESSIONAL ENGINEER
PAUL C. PINA
NO. C41035
EXP. 03-17
CIVIL
STATE OF CALIFORNIA

IT IS A VIOLATION OF LAW FOR ANY PERSON, UNLESS THEY ARE ACTING UNDER THE DIRECTION OF A LICENSED PROFESSIONAL ENGINEER, TO ALTER THIS DOCUMENT.

CCL03977
AWE – DT PIEDMONT
120 VISTA AVE.,
PIEDMONT, CA 94611
TOWER (INDOOR)

SHEET TITLE
ELEVATIONS

SHEET NUMBER
A-4

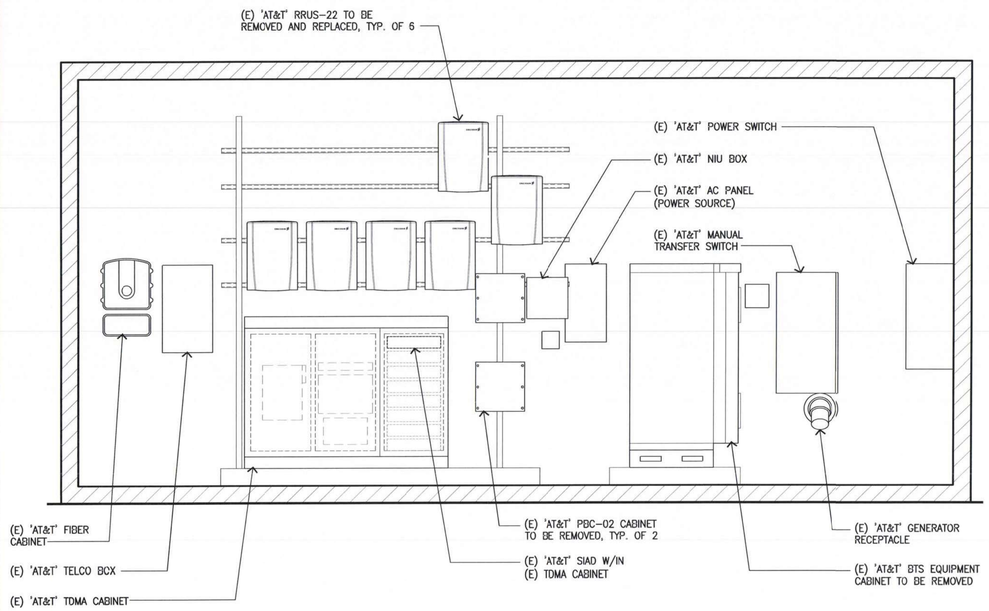

(E) EAST ELEVATION DETAIL

SCALE: 1/2"=1'-0" 1' 2' 4' **3**

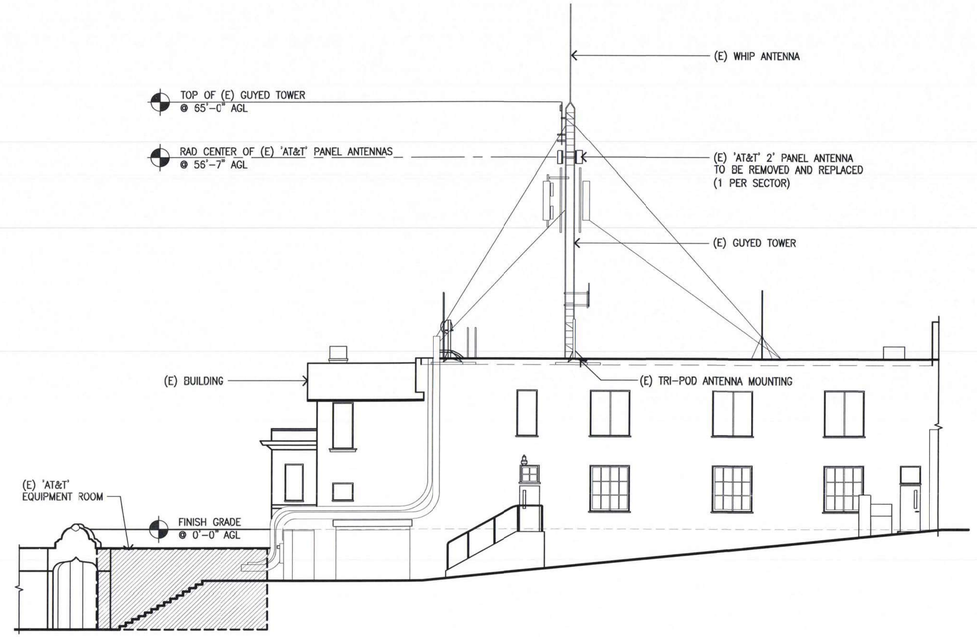

(E) EAST ELEVATION

SCALE: 3/32"=1'-0" 4' 8' 20' **1**

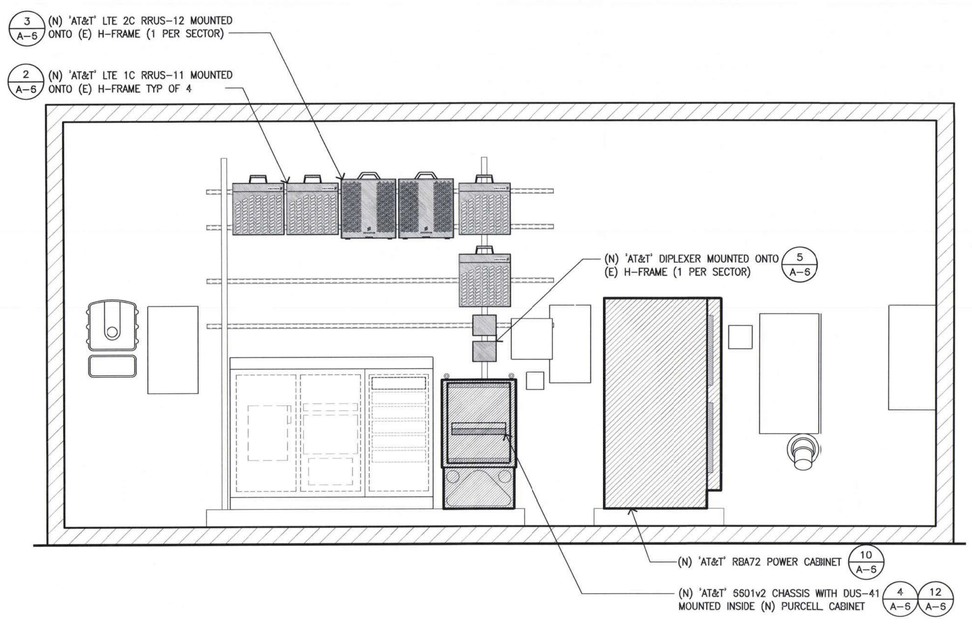

(N) EAST ELEVATION DETAIL

SCALE: 1/2"=1'-0" 1' 2' 4' **4**

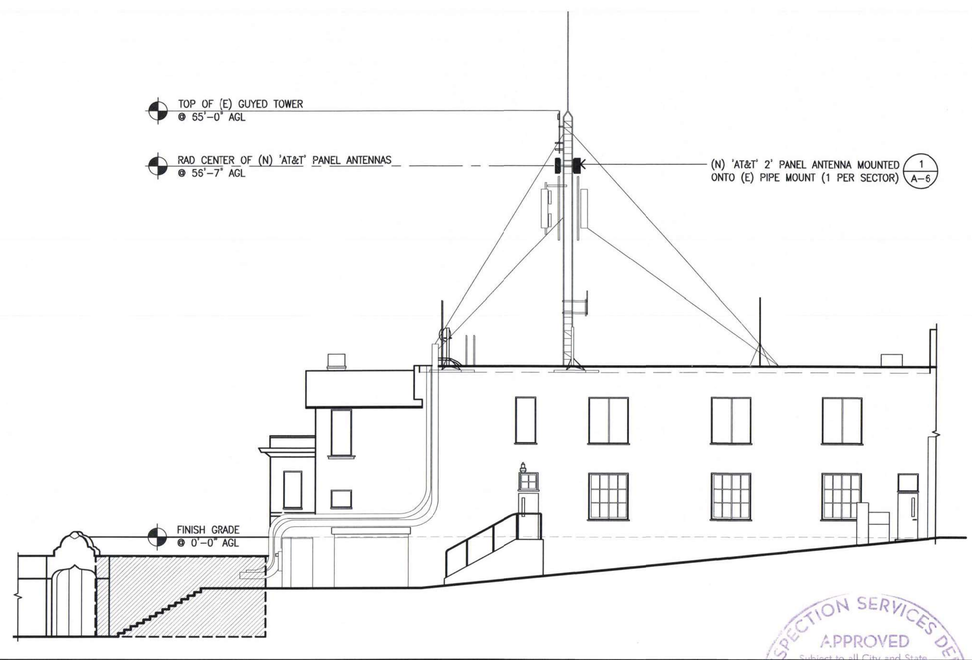

(N) EAST ELEVATION

SCALE: 3/32"=1'-0" 4' 8' 20' **2**

at&t
5001 EXECUTIVE PKWY,
SAN RAMON, CA 94583

Vinculums
575 LENNON LANE, SUITE 125
WALNUT CREEK, CA 94598

BREEN Engineering Inc
5281 BEACH BLVD. #125
BUENA PARK, CALIFORNIA 90621
TEL: (657) 529-2111
WWW.BREENENG.COM

REV	DATE	DESCRIPTION
1	03/21/16	100% CONSTRUCTION DRAWINGS
0	02/25/16	90% CONSTRUCTION DRAWINGS

REGISTERED PROFESSIONAL ENGINEER PAUL C. RIPKA NO. C41035 EXP. 03-17 CIVIL STATE OF CALIFORNIA

IT IS A VIOLATION OF LAW FOR ANY PERSON, UNLESS THEY ARE ACTING UNDER THE DIRECTION OF A LICENSED PROFESSIONAL ENGINEER, TO ALTER THIS DOCUMENT.

CCL03977
AWE - DT PIEDMONT
120 VISTA AVE.,
PIEDMONT, CA 94611
TOWER (INDOOR)

SHEET TITLE
ELEVATIONS

SHEET NUMBER
A-5

INSPECTION SERVICES DEPT. APPROVED
Subject to all City and State [redacted] ordinances and state [redacted] laws. Approval of field inspections, misstatements or omissions hereon shall not be construed in any way to validate any violation of any local or state law.
Building Inspector
5/9/16
BLD-00547
CITY OF PIEDMONT

MANUFACTURER: COMMSCOPE
MODEL: RBA72
CABINET DIMENSIONS (HxWxD): 72.00" X 43" X 36"
WEIGHT: 425lbs (EMPTY)
3900lbs W/ BATTERY

DRILL INSTRUCTION NOTES:
1. USE OF ALL FIVE REAR INTERNAL MOUNTING HOLES REQUIRES IN REGIONS OF HIGH GEOLOGICAL INSTABILITY
2. USE MOUNTING HOLES SHOWN IN SOLID BLACK FOR MIN. MOUNTING, 12 EA.

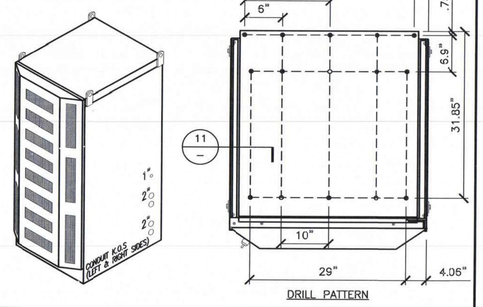

RBA72 POWER CABINET | 10

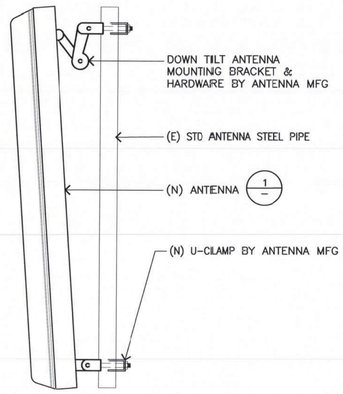

ANTENNA MOUNT | 7

DIMENSIONS, WxDxH: 482x350x66mm (19"x13.75"x2.63")
NOMINAL OPERATING VOLTAGE: 48 VDC
TOTAL WEIGHT: ± 19.8 lbs

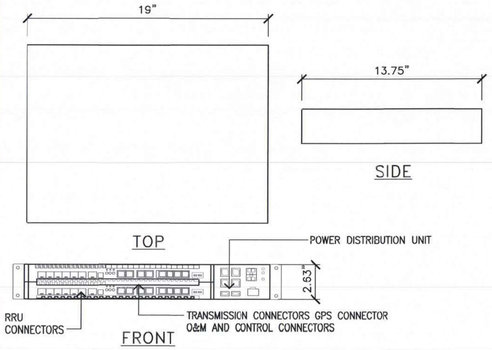

RBS 6601 W/ DUS-41 SPECS | 4

MANUFACTURER: FILTRONIC
MODEL NO.: DTS-P6T2BF-V1-5
DIMENSIONS, HxWxD: 2.3"X13.8"X6.1"
WEIGHT:
[ANTENNA] 17.7 lbs.
[MOUNT] 11.0 lbs.
[SHIPPING WIEGHT] 33.0 lbs.

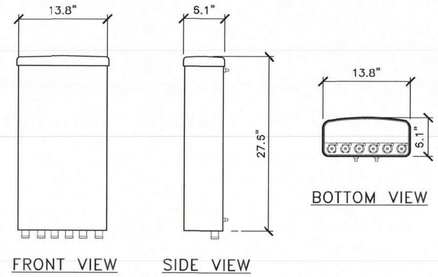

ANTENNA SPECS | 1

NOTE:
*GC TO VERIFY MOUNTING HOLES ON CABINET, MIN. OF 4.

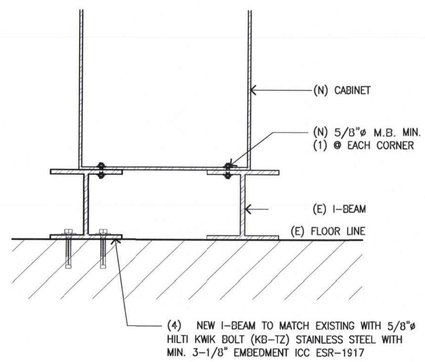

CABINET ANCHORAGE | 11

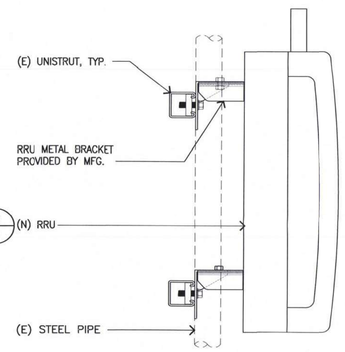

RRUS-11 MOUNT | 8

MANUFACTURER: COMMSCOPE
MODEL: CBC78-DF
DIMENSIONS, WxDxH: 5.9"x2.6"x7.9"
WEIGHT: 5.6 lbs

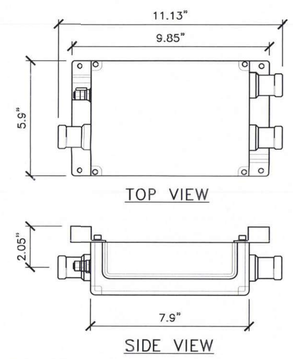

DIPLEXER SPECS | 5

MANUFACTURER: ERICSSON
MODEL: RRUS11 B12
DIMENSIONS, WxDxH: 17.3"x7.2"x17.8"
WEIGHT: 50 lbs

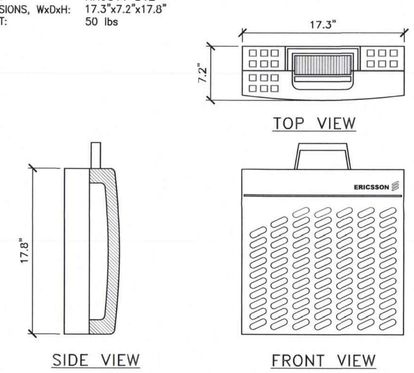

RRU SPECIFICATIONS | 2

MANUFACTURER: FLEXSURE
MODEL: FLX15WS WITH 14" PLINTH
DIMENSIONS, WxDxH: 25"x20"x44"
WEIGHT: 500 lbs

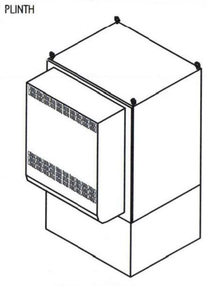

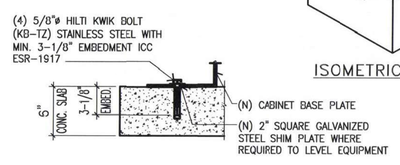

PURCELL CABINET SPECIFICATIONS | 12

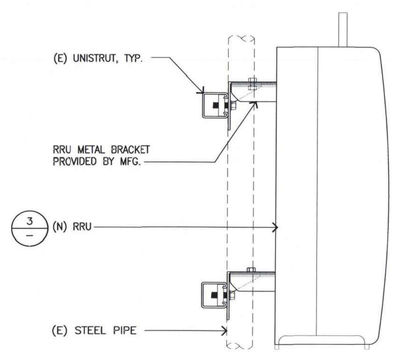

RRUS-12 MOUNT | 9

MANUFACTURER: KAELUS
MODEL: TMA2044F1V1-1
DIMENSIONS, HxDxW: 284x181.5x89mm (11.2"x7.14"x3.5")
WEIGHT: 9kg / 20 lbs

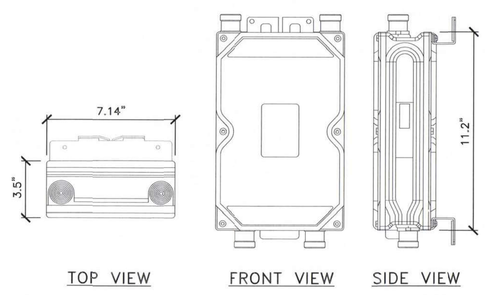

DTMA SPECS | 6

MANUFACTURER: ERICSSON
MODEL: RRUS-12
DIMENSIONS, WxDxH: 20.4"x18.5"x7.5"
WEIGHT: 50 lbs

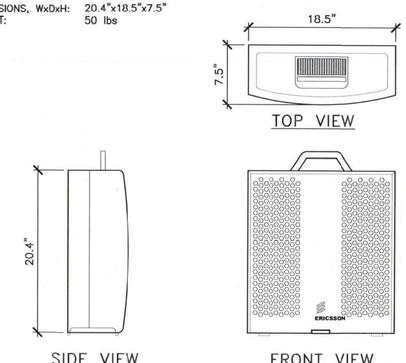

RRU SPECIFICATIONS | 3

at&t
5001 EXECUTIVE PKWY,
SAN RAMON, CA 94583

Vinculums
575 LENNON LANE, SUITE 125
WALNUT CREEK, CA 94598

BREEN Engineering Inc
6281 BEACH BLVD. #125
BUENA PARK, CALIFORNIA 90621
TEL: (657) 529-2111
WWW.BREENENG.COM

REV	DATE	DESCRIPTION
1	03/21/16	100% CONSTRUCTION DRAWINGS
0	02/26/16	90% CONSTRUCTION DRAWINGS

REGISTERED PROFESSIONAL ENGINEER
RAUL PINA
NO. C41035
EXP. 03-17
CIVIL
STATE OF CALIFORNIA

IT IS A VIOLATION OF LAW FOR ANY PERSON, UNLESS THEY ARE ACTING UNDER THE DIRECTION OF A LICENSED PROFESSIONAL ENGINEER, TO ALTER THIS DOCUMENT.

CCL03977
AWE - DT PIEDMONT
120 VISTA AVE.,
PIEDMONT, CA 94611
TOWER (INDOOR)

SHEET TITLE
EQUIPMENT SPECS AND DETAILS

SHEET NUMBER
A-6

INSPECTION SERVICES DIV.
APPROVED
Subject to all City and State Laws or Ordinances; also all state & city licenses; all field inspections, tests, and notations hereon. This approval in no way validates any violation of any local or state law.
5/9/16
Building Inspector
B16-00349
CITY OF PIEDMONT

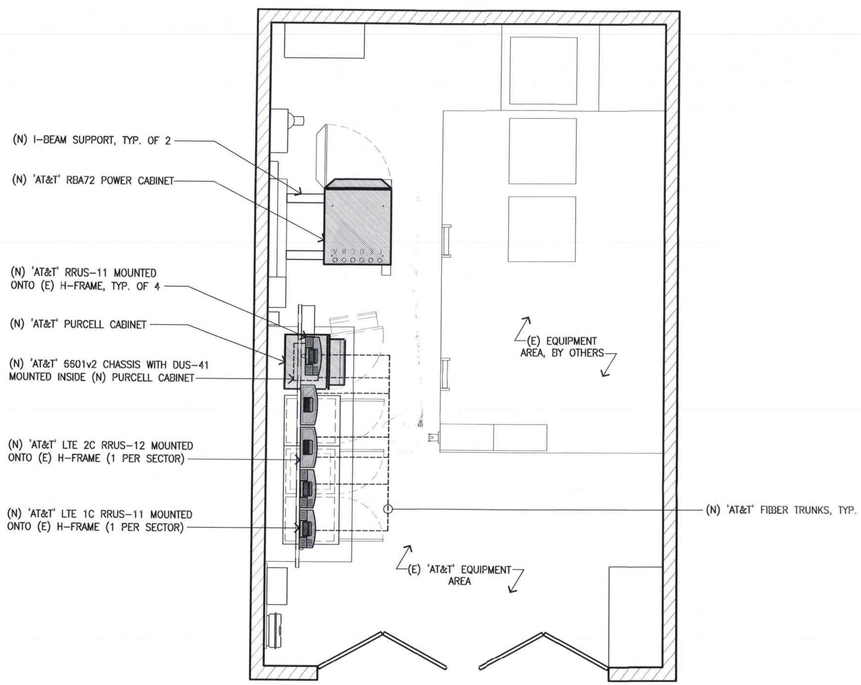

(N) EQUIPMENT ELECTRICAL PLAN

SCALE: 3/8"=1'-0" 2' 4' 6' **2**

NOTES

1. CONDUIT ROUTING AND GROUNDING ARE DIAGRAMMATICALLY SHOWN THE ON THE PLANS AND ARE ONLY APPROXIMATIONS. THE EXACT LOCATION AND ROUTING SHALL BE FIELD VERIFIED. FOR GROUNDING DETAILS SEE SHEET E-2.
2. ALL ELECTRICAL EQUIPMENT AND CONTROLLING DEVICES SHALL BE PROVIDED WITH ENGRAVED LAMICOID NAMEPLATES, INDICATING THE CIRCUITS ORIGINATION AND ALL EQUIPMENT TERMINATIONS.
3. CABLE SUPPORTS FOR ALL CABLE ASSEMBLIES, COAX CABLES, AND RET CONTROL CABLES. CABLE STRAIN-RELIEFS, CABLE SUPPORTS SHALL BE APPROVED FOR THE PURPOSE. INSTALLATION SHALL BE IN ACCORDANCE WITH THE MANUFACTURER'S SPECIFICATIONS AND RECOMMENDATIONS.
4. SUBCONTRACTOR SHALL PROVIDE ALL BREAKERS, CONDUITS, AND CIRCUIT CONDUCTORS, AS REQUIRED FOR A COMPLETED SYSTEM AND SHALL BE IN COMPLIANCE WITH THE MANUFACTURER'S SPECIFICATIONS.
5. CONTRACTOR SHALL RESTORE ANY TRENCHED AREAS TO ORIGINAL CONDITIONS BY EITHER SEEDING OR SODDING GRASS AREAS, OR REPLACING ASPHALT OR CONCRETE AREAS TO ORIGINAL CROSS SECTION.
6. ALL UNDERGROUND CONDUITS SHALL BE SCHEDULE 80 PVC, EXCEPT THAT ELBOWS AND RISERS SHALL BE RMC. ALL UNDERGROUND ELBOWS SHALL BE SWEEPING BENDS (2" MINIMUM REQUIRED).
7. THE SUBCONTRACTOR SHALL SUPPLY AT&T WITH RESULTS FROM PRE-CONSTRUCTION AND POST-CONSTRUCTION OHM TESTING (GROUNDING) RESULTS.
8. THE SUBCONTRACTOR SHALL BE RESPONSIBLE TO PROVIDE A "FALL OF POTENTIAL" TEST ON THE PROPOSED SUPPLEMENTAL GROUNDING FIELD PRIOR TO FINAL CONNECTION OF THE GROUNDING SYSTEM TO EQUIPMENT. THE TEST SHALL BE PERFORMED BY A QUALIFIED AND CERTIFIED TESTING AGENT. PROVIDE INDEPENDENT TEST RESULTS TO THE PROJECT MANAGER FOR REVIEW. THE GROUNDING SYSTEM RESISTANCE TO EARTH GROUNDING SHALL NOT EXCEED FIVE (5) OHMS. IF THE GROUNDING TEST EXCEEDS THE MAXIMUM OF (5) OHMS, THE SUBCONTRACTOR SHALL BE RESPONSIBLE TO PROVIDE ADDITIONAL GROUNDING RODS AND CONNECTIONS AS REQUIRED TO MEET THE (5) OHMS' MAXIMUM.
9. THE INSPECTOR HAVING JURISDICTION SHALL INSPECT ALL GROUNDING CONNECTIONS FOR TIGHTNESS. EXOTHERMIC WELDED CONNECTIONS SHALL BE APPROVED BEFORE BEING PERMANENTLY CONCEALED.
10. SUBCONTRACTOR SHALL GROUND ALL EQUIPMENT AS A COMPLETE SYSTEM. GROUNDING SHALL BE PERFORMED BY QUALIFIED WIREMEN IN COMPLIANCE WITH MANUFACTURER'S SPECIFICATIONS AND RECOMMENDATIONS.

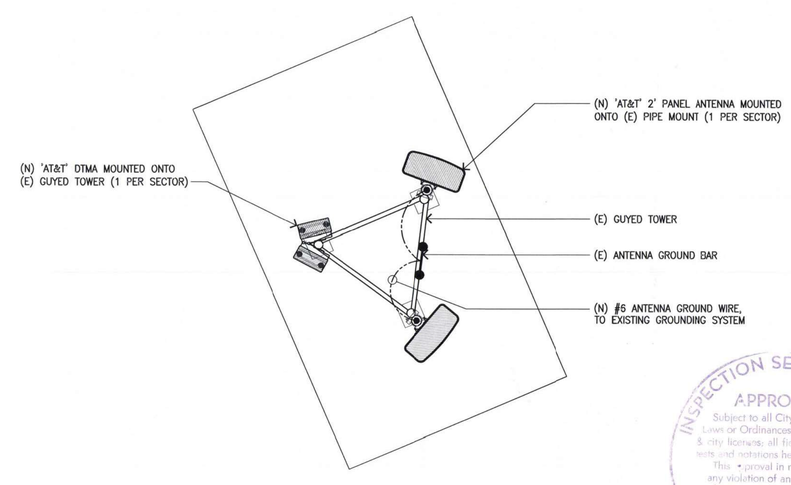

INSPECTION SERVICES DEPT
APPROVED
Subject to all City and State Laws or Ordinances; also all state & city licenses; all field inspections, tests and omissions hereon.
This approval in no way validates any violation of any local or state law.
Building Inspector 5/2/16
B16-00349
CITY OF PIEDMONT

NORTH

(N) ANTENNA ELECTRICAL PLAN

SCALE: 3/4"=1'-0" 1' 2' 4' **1**

at&t
5001 EXECUTIVE PKWY,
SAN RAMON, CA 94583

Vinculums
575 LENNON LANE, SUITE 125
WALNUT CREEK, CA 94598

BREEN Engineering Inc
5281 BEACH BLVD. #125
BUENA PARK, CALIFORNIA 90621
TEL: (657) 529-2111
WWW.BREENENG.COM

REV	DATE	DESCRIPTION
1	03/21/16	100% CONSTRUCTION DRAWINGS
0	02/26/16	90% CONSTRUCTION DRAWINGS

REGISTERED PROFESSIONAL ENGINEER
PAUL CORRIA
NO. C41035
EXP. 03-17
CIVIL
STATE OF CALIFORNIA

IT IS A VIOLATION OF LAW FOR ANY PERSON, UNLESS THEY ARE ACTING UNDER THE DIRECTION OF A LICENSED PROFESSIONAL ENGINEER, TO ALTER THIS DOCUMENT.

CCL03977
AWE - DT PIEDMONT
120 VISTA AVE.,
PIEDMONT, CA 94611
TOWER (INDOOR)

SHEET TITLE
ELECTRICAL & GROUNDING LAYOUT

SHEET NUMBER
E-1

NOT USED | 5

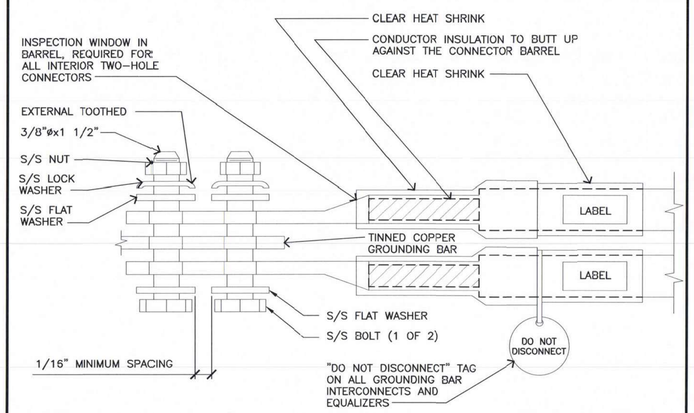

INTERIOR TWO HOLE LUG | 3

EACH GROUND CONDUCTOR TERMINATING ON ANY GROUND BAR SHALL HAVE AN IDENTIFICATION TAG ATTACHED AT EACH END THAT WILL IDENTIFY ITS ORIGIN AND DESTINATION.

SECTION "P" – SURGE PROTECTORS

CABLE ENTRY PORTS (HATCH PLATES) (2 AWG)
GENERATOR FRAMEWORK (IF AVAILABLE) (2 AWG)
TELCO GROUND BAR (2 AWG)
COMMERCIAL POWER COMMON NEUTRAL/GROUND BOND (2 AWG)
+24V POWER SUPPLY RETURN BAR (2 AWG)
–48V POWER SUPPLY RETURN BAR (2 AWG)
RECTIFIER FRAMES.
COAX SUPPRESSION

SECTION "A" – SURGE ABSORBERS

INTERIOR GROUND RING (2 AWG)
EXTERNAL EARTH GROUND FIELD (BURIED GROUND RING) (2 AWG)
METALLIC COLD WATER PIPE (IF AVAILABLE) (2 AWG)
BUILDING STEEL (IF AVAILABLE) (2 AWG)

SECTION "I" – ISOLATED GROUND ZONE

ALL COMMUNICATIONS EQUIPMENT FRAMES.
ISOLATED GROUND BAR – IGB (2 AWG)

DETAIL NOTES:

1. EXOTHERMICALLY WELD 2 AWG BARE TINNED SOLID COPPER CONDUCTOR TO GROUND BAR. ROUTE CONDUCTOR TO BURIED GROUND RING AND PROVIDE PARALLEL EXOTHERMIC WELD.
2. USE PERMANENT MARKER TO DRAW THE LINES BETWEEN EACH SECTION AND LABEL EACH SECTION ("P", "A", "I") WITH 1" HIGH LETTERS.

NEWTON INSTRUMENT COMPANY, INC.
BUTNER, N.C. OR APPROVED EQUAL

NO.	REQ.	PART NO.	DESCRIPTION
1	1	1/4"x4"x30"	SOLID GND. BAR
2	2	A-6056	WALL MTG. BRKT.
3	2	3061-4	INSULATORS
4	4	3012-1	5/8"-11x1" H.H.C.S.
5	4	3015-8	5/8 LOCKWASHER

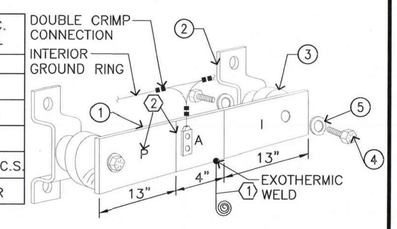

GROUND BAR | 1

NOT USED | 4

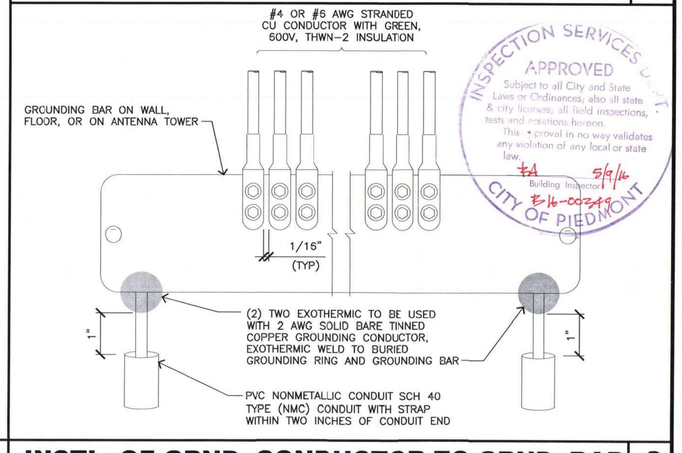

INSPECTION SERVICES DIV.
APPROVED
Subject to all City and State Laws or Ordinances; also all state & city licenses; all field inspections, tests and notations hereon.
This approval in no way validates any violation of any local or state law.
EA 5/9/16
Building Inspector
B16-00249
CITY OF PIEDMONT

INSTL. OF GRND. CONDUCTOR TO GRND. BAR | 2

at&t
5001 EXECUTIVE PKWY,
SAN RAMON, CA 94583

Vinculums
575 LENNON LANE, SUITE 125
WALNUT CREEK, CA 94598

BREEN Engineering Inc
6281 BEACH BLVD. #125
BUENA PARK, CALIFORNIA 90621
TEL:(657) 529-2111
WWW.BREENENG.COM

REV	DATE	DESCRIPTION
1	03/21/16	100% CONSTRUCTION DRAWINGS
0	02/25/16	90% CONSTRUCTION DRAWINGS

REGISTERED PROFESSIONAL ENGINEER
NO. C41035
EXP. 03-17
CIVIL
STATE OF CALIFORNIA

IT IS A VIOLATION OF LAW FOR ANY PERSON, UNLESS THEY ARE ACTING UNDER THE DIRECTION OF A LICENSED PROFESSIONAL ENGINEER, TO ALTER THIS DOCUMENT.

CCL03977
AWE – DT PIEDMONT
120 VISTA AVE.,
PIEDMONT, CA 94611
TOWER (INDOOR)

SHEET TITLE
EME REPORT

SHEET NUMBER
EME-1