City of Piedmont
SUPPLEMENTAL COUNCIL AGENDA REPORT

DATE: May 2, 2022

TO: Mayor and Council

FROM: Sara Lillevand, City Administrator

SUBJECT: Receipt of the Piedmont Community Pool Design Development Package and Consideration of 1) Approval of Design Modifications to the Recreation Pool; and 2) Authorization for Staff and ELS to Advance to Construction Documents Phase

---

BACKGROUND

On April 30, 2022, the City received the 100% Design Development (DD) package for the Piedmont Community Pool Project from ELS Architecture & Urban Design.

The design reflected in this DD package was the result of proposed modifications approved by the City Council at its March 21, 2022 and April 4, 2022 meetings and includes the following changes to the schematic design:

Pool Modifications:

- Reduction in size of the Recreation Pool
  - Modified length of the three Recreation Pool lap lanes from 25 yards to 20 yards
  - Substantial reduction in the size of the zero-depth entry area
- All-electric pool heating was included in DD at the direction of City Council on April 4, 2022

The competition pool remains as it has been designed, a 27-meter x 25-yard with notches for floating water polo goals and a depth profile ranging from 6.5 feet to 12 feet.

Building Modifications:

- Elimination of the majority of the second story of the building.
  - The area paralleling the tennis court was redesigned as a rooftop pavilion to support outdoor programming as well as community gatherings. Overhead trellis will provide area for photovoltaic-thermal panels (PVT's) and photovoltaic panels (PV's).
  - The roof deck paralleling Bonita Avenue will provide area for mechanical equipment as well as PV panels.
  - The "Pavilion" level will be accessible from Bonita Avenue and the tennis courts, but would not have internal access to the lower level.
  - Two multi-stall restrooms and a storage area were retained on the Pavilion level.

- Elevator/Stairway: With the elimination of the second story, the planned elevator and stairway were eliminated, thus making the lobby of the Community Pool Building significantly smaller and shortening the leg of the building paralleling Bonita Ave.

- Poolside Room: The indoor space at deck level which could be used for classes, camps, birthday and school parties as well as regular lifeguard and staff training was included in DD package and will be included in the bid package but will be constructed only if bids received fall within the project budget.

- Gender Neutral Changing Spaces: Reduced in size from conceptual design but maintained two family restrooms/changing areas.

The competition pool remains as it has been designed, a 27 meter x 25 yard with notches for floating water polo goals and a depth profile ranging from 6.5 feet to 12 feet.

Lighting at the Competition Pool

The DD package includes four (4) 15' high poles, shielded fixtures, with an avg 7.27 footcandles (fc) on the water surface and 8.0 fc on deck. This lighting level provides ample light for early morning and evening swimming but does not provide the lighting levels required for water polo use. As an additive alternate, the DD package include four (4) 30' high poles, with lighting fixtures that provide an average 30 fc on the water surface and would allow for evening water polo practice. The upgrade to 30 fc lighting would cost approximately $15,000. This decision does not need to be made for several months and may benefit from Pool Advisory Committee consideration.

COMMUNITY POOL ADVISORY COMMITTEE RECOMMENDATION

As noted in the primary agenda report for this item, pursuant to City Council direction, the Community Pool Advisory Committee (PAC) met on April 26, 2022 to discuss the length of the lap lanes in the recreation pool. The PAC recommended that the lap lanes be reverted to 25 yards and that the stairs be rotated 90 degrees so as to be away from the lap lanes. These changes are not reflected in the DD package in front of Council this evening, but should the DD package be approved, the changes will be incorporated in Construction Documents.

DESIGN DEVELOPMENT COST ESTIMATE

Updated cost estimates were generated as part of DD package. Comparison cost estimates for March 21st and March 31st are also shown for reference.

Construction Cost Estimate (Hard Costs)	03/21/2022	03/31/2022	04/30/2022
Building	$14,600,000	$9,100,000	$10,330,000*
Swimming Pools & Decks	$6,200,000	$6,100,000	$6,350,000
Site Improvements	$4,200,000	$4,200,000	$3,725,000
All-Electric Differential	n/a	n/a	$500,000
Total**	$25,000,000	$19,400,000	$20,905,000

Target Hard Cost Construction Budget	$19,000,000	$19,000,000	$19,000,000

Gap	$6,000,000	$400,000	$1,950,000

Additional Considerations			
25 yard lap lanes	included above	n/a	$275,000
Additional 300 sq ft of zero beach entry area	included above	n/a	

Total Funding Gap	**$2,225,000**

*The 4/30/2022 includes the poolside room and two family changing rooms
** Includes the following mark-ups:

Bonds & Insurance 3.00%
General Conditions 9.00%
Contractor's O&P 4.50%
Remaining Design Contingency for CD's 5.00%
Cost Escalation 11.42%

OTHER FUNDING OPPORTUNITIES

The gap between the hard target construciton budget and the estimated project cost is significant. Staff believes, however, that it is possible to close this gap with fundraising activities, grant monies, electricifcation incentives, and potential state budget allocation. The Piemdont Recreactional Facilities Organizaiton (PRFO) has indicated its willingness to support a fundraining effort for the community pool project. In addition, councilmembers and staff have met with the California State Energy Commission, East Bay Community Energy, as well as Senator Nancy Skinner and Assemblymember Buffy Wicks in an effort to secure additional funding for this cutting edge electrification project. PRFO, with support from staff plans to form a community pool fundraisng committee to develop and implement a strategy to raise funds targeted at maintaing the poolside room, the Recreation Pool enhancements, and a Competition

Pool that is water polo compliant. Staff will also consider how best to invite the community to support electrification through provate donations.

ATTACHMENT

A Design Development Package

PIEDMONT COMMUNITY POOL

777 MAGNOLIA AVENUE PIEDMONT, CA 94611

CITY OF PIEDMONT
120 VISTA AVENUE PIEDMONT, CA 94611

PROJECT NUMBER: 202115

100% DESIGN DEVELOPMENT

APRIL 30, 2022

els architecture+ urban design

REVISION

NUMBER	DATE	DESCRIPTION

NOT FOR CONSTRUCTION

ABBREVIATIONS

d	PENNY (NAIL)
PL	PROPERTY LINE
&	AND
∠	ANGLE
@	AT
CL	CENTERLINE
ø	DIAMETER, ROUND
⊥	PERPENDICULAR
#	POUND, NUMBER
(E)	EXISTING
(N)	NEW
A.B.	ANCHOR BOLT
ABV.	ABOVE
A.C.	ASPHALTIC CONCRETE
A/C	AIR CONDITIONING
ACOUS.	ACOUSTICAL
A.D.	AREA DRAIN
ADJ.	ADJUSTABLE, ADJACENT
A.F.F.	ABOVE FINISH FLOOR
AGGR.	AGGREGATE
ALUM.	ALUMINUM
ALT.	ALTERNATE
A.P.	ACCESS PANEL
APPROX.	APPROXIMATE
ARCH.	ARCHITECT
ASPH.	ASPHALT
A.T.	ASHTRAY
BC	BOTTOM OF CURB
BSMT.	BASEMENT
BTW.	BETWEEN
BD.	BOARD
BITUM.	BITUMINOUS
BLDG.	BUILDING
BLK.	BLOCK
BLKG.	BLOCKING
BLW.	BELOW
BM.	BEAM
B.O.	BOTTOM OF
B.S.	BOTTOM OF SILL
B.R.	BOTTOM OR RISER
B.O.C.	BOTTOM OF CURB
BOT.	BOTTOM
B.U.R.	BUILT-UP ROOFING
CAB.	CABINET
C.B.	CATCH BASIN
CEM.	CEMENT
CEM. PLAS.	CEMENT PLASTER
CER.	CERAMIC
C.I.	CAST IRON
C.J.	CONTROL JOINT
CLG.	CEILING
CLKG.	CAULKING
CH.	COAT HOOK
C.J.	CONSTRUCTION JOINT
CLO.	CLOSET
C.O.	CLEAN_OUT
CLR.	CLEAR
COL.	COLUMN
COMP.	COMPOSITION
CONC.	CONCRETE
C.M.U.	CONCRETE MASONRY UNIT
CONN.	CONNECTION
CONST.	CONSTRUCTION
CONT.	CONTINUOUS
CORR.	CORRIDOR
C.T.	CERAMIC TILE
CTSK.	COUNTERSINK
CNTR.	COUNTER
CPT.	CARPET
CTR.	CENTER
CUSP.	CUSPIDOR
CW.	CURTAIN WALL
D.	DEEP
DBL.	DOUBLE
D.C. TYPE 1 (ETC.)	DECK COATING TYPE 1 (ETC.)
D.D	DECK DRAIN
DEMO.	DEMOLISH
DEPT.	DEPARTMENT
DET.	DETAIL
D.F.	DOUGLAS FIR, DRINKING FOUNTAIN
DIAM.	DIAMETER
DIAG.	DIAGONAL
DIM.	DIMENSION
DISP.	DISPENSER
DN.	DOWN
D.O.	DOOR OPENING
DR.	DOOR
DWG.	DRAWING
D.W.P.	DESIGN WORKING POINT
DWR.	DRAWER
D.S.	DAVIT SOCKET
D.S.P.	DRY STANDPIPE
E.	EAST
EA.	EACH
E.B.	EXPANSION BOLT
E.F.	EXHAUST FAN
E.F.S.	EXTER. FINISH SYSTEM
E.I.F.S.	EXTER. INSUL. & FIN. SYST.
E.J.	EXPANSION JOINT
ELECT.	ELECTRICAL
EL.	ELEVATION
ELEV.	ELEVATOR
EMER.	EMERGENCY
ENAM.	ENAMELED
ENCL.	ENCLOSURE
E.P.	ELECTRICAL PANEL
EQ.	EQUAL
EQUIP.	EQUIPMENT
E.W.	EACH WAY
E.W.C.	ELECTRIC WATER COOLER
(E)	EXISTING
EXPO.	EXPOSED
EXP.	EXPANSION
EXT.	EXTERIOR
F.A.	FIRE ALARM
F.B.	FOOTBOARD
F.D.	FLOOR DRAIN
FDN.	FOUNDATION
F.E.	FIRE EXTINGUISHER
F.E.C.	FIRE EXTINGUISHER CABINET
F.H.	FIRE HYDRANT
F.F.	FINISH FLOOR
F.H.C.	FIRE HOSE CABINET
FIN.	FINISH
FIXT.	FIXTURE
FLR.	FLOOR
FLASH.	FLASHING
FLUOR.	FLUORESCENT
F.O.	FACE OF
F.O.C.	FACE OF CONCRETE
F.O.F.	FACE OF FINISH
F.O.S.	FACE OF STUDS
FPRF.	FIREPROOF
FRMG.	FRAMING
F.S.R.	FIRE SPRINKLER RISER
F.S.	FLOOR SINK
FT.	FOOT, FEET
FTG.	FOOTING
FND.	FOUNDATION
FURR.	FURRING
FUT.	FUTURE
GA.	GAUGE
GALV.	GALVANIZED
G.B.	GRAB BAR
GWB.	GYPSUM WALL BOARD
G.I.	GALVANIZED IRON
G.F.I.	GROUND FAULT INTERRUPTER
G.F.R.C.	GLASS FIBER REINF. CONC.
GL.	GLASS
GND.	GROUND
GR.	GRADE
G.R.G.	GLASS REINFORCED GYPSUM
GYP.	GYPSUM
H.R.	HAND RAIL
H.	HIGH
H.B.	HOSE BIBB
HC.	HANDICAPPED
H.C.	HOLLOW CORE
HDR.	HEADER
HDWD.	HARDWOOD
HDWE.	HARDWARE
H.M.	HOLLOW METAL
HORIZ.	HORIZONTAL
HR.	HOUR
HT.	HEIGHT
I.D.	INSIDE DIAMETER (DIMENSION)
INSUL.	INSULATION
INT.	INTERIOR
INTERM.	INTERMEDIATE
JAN.	JANITOR
JST.	JOIST
J.H.	JOIST HANGER
JT.	JOINT
KIT.	KITCHEN
L.B.	LAG BOLT
LAM.	LAMINATE
LAV.	LAVATORY
LKR.	LOCKER
LOC.	LOCATION
L.	LONG
LT.	LIGHT
MACH.	MACHINE
MAX.	MAXIMUM
M.B.	MACHINE BOLT
M.C.	MEDICINE CABINET
MECH.	MECHANICAL
MEMB.	MEMBRANE
MFR.	MANUFACTURER
MH.	MANHOLE
MIN.	MINIMUM
MIR.	MIRROR
MISC.	MISCELLANEOUS
M.O.	MASONRY OPENING
MTD.	MOUNTED
MTL.	METAL
MTP.	METAL TOILET PARTITION
MTL.	METAL SIDING
MUL.	MULLION
(N)	NEW
N.	NORTH
N.I.C.	NOT IN CONTRACT
NO.	NUMBER
NOM.	NOMINAL
N.T.S.	NOT TO SCALE
O.A.	OVERALL
OBSC.	OBSCURE
O.C.	ON CENTER
OD	OVERFLOW DRAIN
O.D.	OUTSIDE DIAMETER
O.F.C.I.	OWNER FURNISHED CONTRACTOR INSTALLED
OFF.	OFFICE
O.H.	OVERHEAD
OPNG.	OPENING
OPP.	OPPOSITE
PART'N.	PARTITION
P & SH.	POLE AND SHELF
P.B.	PARTICLE BOARD
P.D.	PLANTER DRAIN
PLUMB.	PLUMBING
PRCST.	PRECAST
PREFAB.	PRE-FABRICATED
PTDF	PRESSURE TREATED DOUGLAS FIR
PL.	PLATE
P. LAM.	PLASTIC LAMINATE
PLAS.	PLASTER
PLYWD.	PLYWOOD
PTP	PLASTIC TOILET PARTITION
PR.	PAIR
PT.	POINT, POINT
PTD	PAINTED
PTN, PART.	PARTITION
P.T.R.	PAPER TOWEL RECPTACLE
Q.T.	QUARRY TILE
r,	RADIUS
R.	RISER
(R)	REMOVE
R.D.	ROOF DRAIN
REF.	REFERENCE
REFER.	REFRIGERATOR
RGTR.	REGISTER
REINF.	REINFORCED
REQ'D	REQUIRED
RESIL.	RESILIENT
RET.	RETAINING
REV.	REVISION, REVISED
RM.	ROOM
R.O	ROUGH OPENING
RDWD.	REDWOOD
R.W.L.	RAIN WATER LEADER
R.B.	RUBBER BASE
S.C.	SOUTH SOLID CORE
S.C.D.	SEAT COVER DISPENSER
SCH.	SCHEDULE
S.D.	SOAP DISPENSER
SECT.	SECTION
S.E.D.	SEE ELECTRICAL DRAWINGS
SH.	SHELF
S.H.V.C.	SURFACE MOUNTED HOSE VALVE CABINET
SHR.	SHOWER
SHT.	SHEET
SIM.	SIMILAR
S.L.D.	SEE LANDSCAPE DRAWINGS
S.M.	SHEET METAL
S.M.D.	SEE MECH. DRAWINGS
S.N.D.	SANITARY NAPKIN DISPENSER
S.N.R.	SANITARY NAPKIN RECEPTACLE
SPEC.	SPECIFICATION
S.P.R.	SINGLE-PLY ROOFING
SQ.	SQUARE SQUARE FOOT, SQUARE FEET
S.S.	STAINLESS STEEL
S.S.D.	SEE STRUCTURAL DRAWINGS
S. SK.	SERVICE SINK
STA.	STATION
STD,	STANDARD
STL.	STEEL
STOR.	STORAGE
STRUCT.	STRUCTURAL
SUSP.	SUSPENDED
SAT	SUSPENDED ACOUSTICAL TILE
S.V.	SHEET VINYL
SYM.	SYMMETRICAL
T.B.	TOWEL BAR
T.C.	TOP OF CURB
T.O.C.	TOP OF CONCRETE
T.D.	TIE DOWN
TEL.	TELEPHONE
TEMP.	TEMPERED
TER.	TERRAZZO
T. & G.	TONGUE AND GROOVE
THK.	THICK
THR.	THRESHOLD
T.O.	TOP OF
T.O.B.	TOP OF BENCH
T.O.C	TOP OF CONCRETE
T.O.S.	TOP OF STRUCTURE
T.P.D.	TOILET PAPER DISPENSER
TRANSF.	TRANSFORMER
T.O.W.	TOP OF WALL
TYP.	TYPICAL
UNF.	UNFINISHED
U.O.N.	UNLESS OTHERWISE NOTED
UR.	URINAL
V.T.	VINYL TILE
VERT.	VERTICAL
VEST.	VESTIBULE
V.I.F.	VERIFY IN FIELD
W	WIDE
W.	WEST
W/	WITH
W.C.	WATER CLOSET
W.I.	WROUGHT IRON
WD.	WOOD
W.F.	WIDE FLANGE
W.O.	WHERE OCCURS
W/O	WITHOUT
WP.	WATERPROOF
WP. TYPE 1 (ETC.)	WATERPROOFING TYPE 1 (ETC.)
WR	WATER RESISTANT
W.S.	WOOD SCREW
WSCT.	WAINSCOT
WT.	WEIGHT
W.W.F.	WELDED WIRE FABRIC

GENERAL NOTES

1. The Contractor shall carefully study and compare the Contract Documents with each other and shall at once report to the Architect errors, inconsistencies or omissions discovered. If the Contractor performs any construction activity knowing it involves a recognized error, inconsistency or omission in the Contract Documents without such notice to the Architect, the Contractor shall assume appropriate responsibility for such performance and shall bear an appropriate amount of the attributable costs for correction.
2. Where new construction abuts existing construction to remain, all conditions affecting work progress and conformance to plans and specifications shall be verified by Contractor prior to start of work.
3. Written dimensions take precedence over scaled measurements. Where discrepancies in dimensions occur they shall be reported to the Architect for resolution.
4. All work and materials shall be in accord with the latest rules and regulations of all applicable state and/or local codes, laws, ordinances, statutes and regulations. Nothing in the drawings or specifications shall be construed as requiring or permitting work contrary to these rules, regulations, and codes.
5. The drawings indicate locations, dimensions, and typical details of construction. The drawings do not illustrate every condition; work not expressly detailed shall be of construction similar to parts that are detailed. Where discrepancies occur, they shall be reported to the Architect for resolution.
6. Site boundary lines, boundary dimensions, boundary declinations, and existing grades are based upon the survey drawing. The Contractor shall be deemed to have inspected the site and satisfied himself as to actual grades, levels, dimensions, and declinations and the true conditions under which the work is to be performed.
7. Masonry dimensions are given to the nominal face of masonry.
   Dimensions are to be face of finish unless otherwise noted. Do not scale the drawings. Lay out work following written dimensions. If written dimensions are lacking, notify the Architect at once. If no locating dimensions are shown, door openings are located by the door details.
8. Dimensions and elevations on these drawings refer to building datum, unless otherwise noted.
9. The Contractor shall visit the site and verify all existing conditions before bidding.

SYMBOLS LEGEND

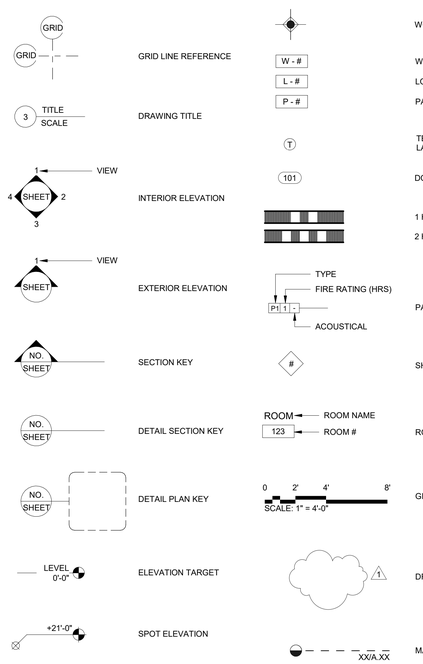

DEFERRED SUBMITTALS

1. AUTOMATIC FIRE SPRINKLER SYSTEM SHOP DRAWINGS
2. DUAL PHOTOVOLTAIC / SOLAR THERMAL SYSTEM SHOP DRAWINGS
3. BUILDING AUTOMATION & MANAGEMENT SYSTEM
4. SITE SHORING SYSTEM, SSD FOR MORE INFORMATION

PROJECT LOCATION

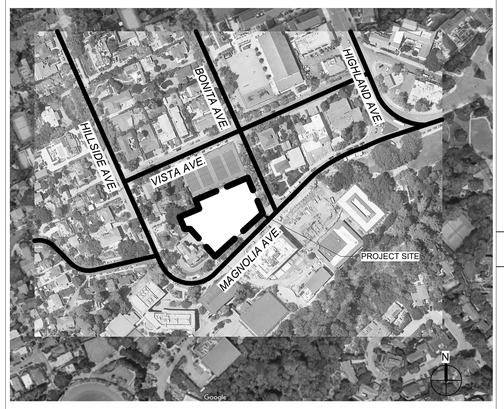

PROJECT DESCRIPTION

THE PROJECT WILL BE BUILT ON THE SITE OF THE EXISTING AQUATICS CENTER AT MAGNOLIA AVENUE AND BONITA AVENUE. THE SCOPE OF THE PROJECT INCLUDES A NEW BUILDING, COMPETITION SWIMMING POOL, AN ACTIVITY POOL, AND SITE WORK.

DEMOLITION OF THE EXISTING AQUATICS CENTER IS INCLUDED WITHIN THE PROJECT SCOPE. DEMOLITION SCOPE INCLUDES TWO BUILDINGS, THREE SWIMMING POOLS, A PARKING LOT AND SITE WORK.

PROJECT SHALL MEET THE INTENT OF LEED SILVER CERTIFIED.

OWNER CONTACT

CITY OF PIEDMONT
120 VISTA AVENUE
PIEDMONT, CA 94611

SARA LILLEVAND, CITY ADMINISTRATOR
SLILLEVAND@PIEDMONT.CA.GOV
(510) 420-3040

SHEET INDEX

ADMINISTRATIVE
A000 COVER SHEET
A001 INDEX SHEET
A002 CODE ANALYSIS, GENERAL NOTES
A003 EGRESS PLAN - LEVEL 1
A004 EGRESS PLAN - LEVEL 2
A020 ACCESSIBILITY DETAILS - PUBLIC & COMMERCIAL BUILDINGS
A021 ACCESSIBILITY DETAILS - PUBLIC & COMMERCIAL BUILDINGS

CIVIL
C1.00 EXISTING CONDITIONS
C2.00 UTILITY DEMOLITION PLAN
C3.00 SITE UTILITY PLAN
C5.00 STORMWATER MANAGEMENT PLAN

LANDSCAPE
L000 EXISTING CONDITIONS AERIAL
L100 ILLUSTRATIVE SITE PLAN
L200 LAYOUT PLAN
L201 SITE SECTIONS
L202 SITE SECTIONS
L300 GRADING PLAN
L400 TREE PLAN
L500 PLANTING PLAN
L600 IRRIGATION PLAN

ARCHITECTURE
A100 DEMOLITION SITE PLAN
A101 PROPOSED OVERALL SITE PLAN
A102 SITE PLANS - UPPER & LOWER

A201 FLOOR PLAN LEVEL 1
A202 GRADE LEVEL SLAB PLAN
A205 ROOF PLAN

A207 HIGH ROOF PLAN
A301 EXTERIOR ELEVATIONS
A302 EXTERIOR ELEVATIONS
A303 EXTERIOR ELEVATIONS
A305 BUILDING SECTIONS
A306 BUILDING SECTIONS
A310 WALL SECTIONS
A311 WALL SECTIONS
A312 WALL SECTIONS
A313 WALL SECTIONS
A314 WALL SECTIONS
A401 ENLARGED PLANS & INTERIOR ELEVATIONS - LOCKER ROOM
A402 ENLARGED PLANS & INTERIOR ELEVATIONS - LOCKER ROOM
A403 ENLARGED PLANS & INTERIOR ELEVATIONS - RESTROOMS
A501 ENLARGED PLANS & INTERIOR ELEVATIONS
A502 ENLARGED PLANS & INTERIOR ELEVATIONS
A503 ENLARGED PLANS & INTERIOR ELEVATIONS
A601 REFLECTED CEILING PLAN LEVEL 1
A602 REFLECTED CEILING PLAN LEVEL 2

A800 SCHEDULES - ROOM FINISHES & DOOR
A801 SIGNAGE TYPE AND DETAILS
A805 STOREFRONT SCHEDULE
A820 EXTERIOR WALL ASSEMBLY TYPES
A821 EXTERIOR DETAILS - SLATE CLADDING
A822 EXTERIOR DETAILS - WOOD COMPOSITE

A830 EXTERIOR DETAILS - STOREFRONT & DOORS
A831 EXTERIOR DETAILS - DOOR AND THRESHOLD

A850 EXTERIOR DETAILS - ROOF TRELLIS
A860 EXTERIOR DETAILS - ROOF DECK
A900 INTERIOR PARTITION TYPES
A901 INTERIOR PARTITION DETAILS - TYP. NON-BEARING
A902 INTERIOR PARTITION DETAILS - TYP. NON-BEARING
A903 SCHEDULE - TYPICAL NON-BEARING LIGHT GAUGE
A910 CEILING DETAILS - ACOUSTICAL
A911 CEILINGS - WOOD GRILLE
A912 CEILING - SUSPENDED GYP BOARD
A920 INTERIOR DETAILS - BASE AND FLOOR
A921 INTERIOR DETAILS - DOOR

STRUCTURAL
S0.01 GENERAL NOTES
S0.02 GENERAL NOTES
S0.03 GENERAL NOTES
S0.04 ABBREVIATIONS, SYMBOLS & SHEET LIST
S2.0.0 LEVEL 1 AND FOUNDATION PLAN
S2.0.1 ROOF LEVEL FRAMING PLAN
S2.0.2 HIGH ROOF LEVEL FRAMING PLAN
S4.0.1 SECTIONS
S5.0.1 TYPICAL CONCRETE DETAILS
S5.0.2 TYPICAL CONCRETE DETAILS
S5.0.3 FOUNDATION SCHEDULES & DETAILS
S5.1.1 CONCRETE DETAILS
S6.0.1 TYPICAL LOAD BEARING & NON-LOAD BEARING CONCRETE MASONRY UNIT (CMU) DETAILS
S6.0.2 TYPICAL NON-LOAD BEARING CONCRETE MASONRY UNIT (CMU) DETAILS
S7.0.1 TYPICAL STEEL DETAILS
S7.0.2 TYPICAL STEEL DETAILS
S7.0.3 TYPICAL METAL DECK DETAILS
S7.0.4 TYPICAL METAL DECK DETAILS
S7.0.5 STEEL COLUMN SCHEDULE & DETAILS

MECHANICAL
M001 LEGEND, SYMBOLS, GENERAL NOTES & DRAWING LIST
M201 FLOOR PLAN LEVEL 1 HVAC
M205 ROOF PLAN - HVAC
M206 HIGH ROOF PLAN - HVAC
M401 DETAILS
M402 DETAILS
M501 SCHEDULES

PLUMBING
P001 LEGEND, SYMBOLS, GENERAL NOTES & DRAWING LIST
P003 FLOOR PLAN - LEVEL 1 - PLUMBING
P201 FOUNDATION LEVEL - PLUMBING
P205 ROOF PLAN - PLUBMING
P206 HIGH ROOF PLAN - PLUMBING
P501 SCHEDULE

ELECTRICAL
E001 LEGEND, SYMBOLS, GENERAL NOTES & DRAWING LIST
E101 SITE PLAN - POWER
E102 SITE PLAN - LIGHTING
E201 FLOOR PLAN - LEVEL 1
E205 ROOF PLAN - POWER
E301 FLOOR PLAN LEVEL 1 - LIGHTING
E305 ROOF PLAN - LIGHTING
E501 SINGLE LINE DIAGRAM
E601 LIGHTING FIXTURE SCHEDULE
E602 LIGHTING CONTROL DIAGRAM
E701 DETAILS

TELECOM
T001 SYMBOLS, ABBREVATIONS, GENERAL NOTES & DRAWING LIST
T101 SITE PLAN - TELECOM
T201 FLOOR PLAN - LEVEL 1 TELECOM
T205 ROOF PLAN - TELECOM
T501 TELECOM BLOCK RISER DIAGRAMS
T701 TELECOM DETAILS
T702 TELECOM DETAILS
T703 TELECOM DETAILS
T704 TELECOM DETAILS

AUDIO VISUAL
TV001 SYMBOLS, ABBREVIATIONS, GENERAL NOTES & DRAWING LIST
TV201 FLOOR PLAN - LEVEL 1 AUDIO VISUAL
TV501 AUDIO VISUAL BLOCK RISER DIAGRAMS

SECURITY
TS001 SYMBOLS, ABBREVIATIONS, GENERAL NOTES & DRAWING LIST
TS101 SITE PLAN - SECURITY
TS201 FLOOR PLAN - LEVEL 1 SECURITY
TS205 ROOF PLAN - SECURITY
TS501 SECURITY BLOCK RISER DIAGRAMS
TS701 SECURITY DETAILS
TS702 SECURITY DETAILS
TS703 SECURITY DETAILS

FIRE ALARM
FA001 SYMBOLS, ABBREVIATIONS, GENERAL NOTES & DRAWING LIST
FA002 SITE PLAN - FIRE ALARM
FA201 FLOOR PLAN - LEVEL 1 - FIRE ALARM
FA205 ROOF PLAN - FIRE ALARM
FA501 FIRE ALARM RISER DIAGRAM
FA0701 FIRE ALARM DETAILS
FA0702 FIRE ALARM DETAILS
FA0703 FIRE ALARM DETAILS

AQUATICS
AP-1 ACTIVITY POOL LAYOUT PLAN
AP-2 ACTIVITY POOL LAYOUT PLAN
AP-3 DETAILS
AP-4 DETAILS
AP-5 DETAILS
DP-1 SWIMMING POOL/ACTIVITY POOL DECK PLAN
SP-1 SWIMMING POOL LAYOUT PLAN
SP-2 SWIMMING POOL/ACTIVITY POOL PIPING PLAN
SP-3 SWIMMING POOL/ACTIVITY POOL UNDERWATER LIGHT/TIMING PLAN
SP-4 SWIMMING POOL SECTIONS
SP-5 DETAILS
SP-6 DETAILS
SP-7 DETAILS
SP-8 DETAILS
SP-9 DETAILS

els architecture+ urban design
2040 Addison St, Berkeley, CA 94704
510.549.2929 | elsarch.com

PROJECT:

PIEDMONT COMMUNITY POOL

777 MAGNOLIA AVENUE PIEDMONT, CA 94611

CLIENT:

CITY OF PIEDMONT

120 VISTA AVENUE PIEDMONT, CA 94611

PROJECT TEAM:

ARCHITECT:
ELS ARCHITECTURE AND URBAN DESIGN
2040 Addison Street
Berkeley, CA 94704
P: 510.549.2929

CIVIL ENGINEER:
BKF ENGINEERS
4670 Willow Road, Suite 250
Pleasanton, CA 94588
P: (925) 396-7704

LANDSCAPE ARCHITECT:
SWA
2200 Bridgeway
Sausalito, CA 94965
P: 415.332.5100

STRUCTURAL ENGINEER:
FORELL/ELSESSER ENGINEERS, INC.
160 Pine Street, 6th Floor
San Francisco, CA 94111
P: 415.837.0700

MEP / FIRE PROTECTION:
GUTTMANN & BLAEVOET
1620 Montgomery Street, Suite 230
San Francisco, CA 94111
P: 415.655.4000

AQUATICS:
AQUATICS DESIGN GROUP
2226 Faraday Avenue
Carlsbad, CA 92008
P: 760.438.8400

SPECIFICATIONS
TOPFLIGHT SPECS
49 Geary Street, Suite 230
San Francisco, CA 94108-5748
P: 415.546.6033

REVISION

NUMBER	DATE	DESCRIPTION

ISSUE:
100% DESIGN DEVELOPMENT

DATE:
APRIL 30, 2022

STAMP:

NOT FOR CONSTRUCTION

SHEET TITLE:
INDEX SHEET

SHEET NUMBER:
A001

CALGREEN VOC LIMITS

TABLE 5.504.4.1
ADHESIVE VOC LIMIT[1,2]
Less Water and Less Exempt Compounds in Grams Per Liter

ARCHITECTURAL APPLICATIONS	CURRENT VOC LIMIT
Indoor carpet adhesives	50
Carpet pad adhesives	50
Outdoor carpet adhesives	150
Wood flooring adhesive	100
Rubber floor adhesives	60
Subfloor adhesives	50
Ceramic tile adhesives	65
VCT and asphalt tile adhesives	50
Drywall and panel adhesives	50
Cove base adhesives	50
Multipurpose construction adhesives	70
Structural glazing adhesives	100
Single-ply roof membrane adhesives	250
Other adhesive not specifically listed	50
SPECIALTY APPLICATIONS	
PVC welding	510
CPVC welding	490
ABS welding	325
Plastic cement welding	250
Adhesive primer for plastic	550
Contact adhesive	80
Special purpose contact adhesive	250
Structural wood member adhesive	140
Top and trim adhesive	250
SUBSTRATE SPECIFIC APPLICATIONS	
Metal to metal	30
Plastic foams	50
Porous material (except wood)	50
Wood	30
Fiberglass	80

1. If an adhesive is used to bond dissimilar substrates together the adhesive with the highest VOC content shall be allowed.
2. For additional information regarding methods to measure the VOC content specified in this table, see South Coast Air Quality Management District Rule 1168, http://www.arb.ca.gov/DRDB/SC/CURHTML/R1168.PDF.

TABLE 5.504.4.2
SEALANT VOC LIMIT
Less Water and Less Exempt Compounds in Grams per Liter

SEALANTS	CURRENT VOC LIMIT
Architectural	250
Marine deck	760
Nonmembrane roof	300
Roadway	250
Single-ply roof membrane	450
Other	420
SEALANT PRIMERS	
Architectural Nonporous Porous	 250 775
Modified bituminous	500
Marine deck	760
Other	750

Note: For additional information regarding methods to measure the VOC content specified in these tables, see South Coast Air Quality Management District Rule 1168.

TABLE 5.504.4.3
VOC CONTENT LIMITS FOR ARCHITECTURAL COATINGS[1, 3]
Grams of VOC per Liter of Coating,
Less Water and Less Exempt Compounds

COATING CATEGORY	CURENT LIMIT
Flat coatings	50
Nonflat coatings	100
Nonflat-high gloss coatings	150
SPECIALTY COATINGS	
Aluminum roof coatings	400
Basement specialty coatings	400
Bituminous roof coatings	50
Bituminous roof primers	350
Bond breakers	350
Concrete curing compounds	350
Concrete/masonry sealers	100
Driveway sealers	50
Dry fog coatings	150
Faux finishing coatings	350
Fire resistive coatings	350
Floor coatings	100
Form-release compounds	250
Graphic arts coatings (sign paints)	500
High temperature coatings	420
Industrial maintenance coatings	250
Low solids coatings[2]	120
Magnesite cement coatings	450
Mastic texture coatings	100
Metallic pigmented coatings	500
Multicolor coatings	250
Pretreatment wash primers	420
Primers, sealers, and undercoaters	100
Reactive penetrating sealers	350
Recycled coatings	250
Roof coatings	50
Rust preventative coatings	250
Shellacs Clear Opaque	 730 550
Specialty primers, sealers and undercoaters	100
Stains	250
Stone consolidants	450
Swimming pool coatings	340
Traffic marking coatings	100
Tub and tile refinish coatings	420
Waterproofing membranes	250
Wood coatings	275
Wood preservatives	350
Zinc-rich primers	340

1. Grams of VOC per liter of coating, including water and including exempt compounds.
2. The specified limits remain in effect unless revised limits are listed in subsequent columns in the table.
3. Values in this table are derived from those specified by the California Air Resources Board, Architectural Coatings Suggested Control Measure, February 1, 2008. More information is available from the Air Resources Board.

TABLE 5.504.4.5
FORMALDEHYDE LIMITS[1]
Maximum Formaldehyde Emissions in Parts per Million

PRODUCT	CURRENT LIMIT
Hardwood plywood veneer core	0.05
Hardwood plywood composite core	0.05
Particleboard	0.09
Medium density fiberboard	0.11
Thin medium density fiberboard[2]	0.13

1. Values in this table are derived from those specified by the California Air Resources Board, Air Toxics Control Measure for Composite Wood as tested in accordance with ASTM E1333. For additional information, see *California Code of Regulations*, Title 17, Sections 93120 through 93120.12.
2. Thin medium density fiberboard has a maximum thickness of $^{5}/_{16}$ inch (8 mm).

CODE ANALYSIS

Applicable Codes:
California Code of Regulations, Title 24, Published by the California Building Standards Commission:
Part 1, "2019 California Administrative Code" (CAC), with July 1, 2021 Supplement
Part 2, "2019 California Building Code" (CBC), with July 1, 2021 Supplement
Part 3, "2019 California Electrical Code" (CEC), with July 1, 2021 Supplement
Part 4, "2019 California Mechanical Code" (CMC), with July 1, 2021 Supplement
Part 5, "2019 California Plumbing Code" (CPC), with July 1, 2021 Supplement
Part 6, "2019 California Energy Code"
Part 9, "2019 California Fire Code" (CFC), with July 1, 2021 Supplement
Part 11, "2019 California Green Building Standards Code," with July 1, 2021 Supplement
Part 12, "2019 California Reference Standards Code"

2010 ADA Standards for Accessible Design, as published by the Department of Justice, September 15, 2010

CBC Chapter 3: Occupancies

A-5 Swimming Pools
A-3 Multi-Purpose Room
B Offices
S-2 Storage (no hazardous materials required for pool)

CBC Chapter 5: Occupancy Separation

Section 508.3 Nonseparated occupancies:
Different occupancies are not required to be separated as long as building area and height are based on the requirements of the most restrictive occupancy. The most restrictive occupancy is A-3, therefore if the building complies with code allowances for A-3 occupancy we can consider the building to be a nonseparated A-3 occupancy.

CBC Chapter 5: General Building Heights and Areas

The building is to be of Type VB construction and will be fully sprinklered.

The building height is two stories with a maximum height of 28'-6".

Building Area in Square Feet (per Section 202)	
Level 1	
Enclosed Building Area	5,715
Covered Outdoor Area	443
Level 1 Total	**6,158**
Level 2	
Enclosed Building Area	440
Covered Outdoor Area	139
Level 2 Total	**579**
Total Building Area	**6,737**

Construction Type	Most Restrictive Occupancy	Area (SF) Per Table 506.2	Height (Stories and Feet)
VB	A-3	6,000 [SM without area increase]	2** / 40'

** Per Table 504.4, A-3 occupancy can be 2-stories when fully sprinklered.
An increase for frontage will be applied to increase allowable area.

CBC Chapter 6: Types of Construction

Building Element	Type VB Construction
Primary Structural Frame	0 hours
Bearing Walls - Exterior	0 hours
Bearing Walls - Interior	0 hours
Nonbearing Walls and Partitions - Exterior	0 hours
Nonbearing Walls and Partitions - Interior	0 hours
Floor Construction and Associated Secondary Members	0 hours
Roof Construction and Associated Secondary Members	0 hours

Table 602: Unrated exterior walls, fire separation distances > 30' on all sides

Chapter 9: Fire Protection Systems
Fire Area: Fire area is defined as the floor area enclosed by exterior building walls. Horizontal projections of the roof or floor above shall be included in the fire area.

Section 903.2.1.4: Group A-3 occupancies are required to have fire sprinklers when the fire area exceeds 12,000 square feet or there is an occupant load of 300 or more. Fire area exceeds 12,000 sf therefore building will be sprinklered.

CBC Chapter 10: Means of Egress

Means of egress is to be provided per the calculated occupant loads for the various occupancy groups per Table 1004.1.2. The number of exits provided are based on the calculated occupant loads per Tables 1006.3.1 and 1006.3.2(2) with 2 exits provided where there are more than 49 occupants, 3 exits for more than 500 occupants and 4 exits for more than 1,000 occupants. The egress component widths for the exterior areas such as the pool and pool deck will be calculated per CBC Sections 1005.3.1 and 1005.3.2 as unsprinklered areas. All building and pool exits will be accessible.

CBC Chapter 11B: Accessibility

The building is a public accommodation and is to be accessible per the requirements of CBC Chapter 11B.

Water slides, raised diving boards and diving platforms shall not be required to comply with these requirements or to be on an accessible route; an accessible route complying with Division 4 shall be provided to the ground- or floor-level entry points, where provided, of stairs, ladders or other means of reaching the raised elements or area

Plumbing Fixture Count

Plumbing Fixture Calculation per CBC Section 3116B.2--Dept. of Public Health

	Size (SF)	Load Factor	Occ. Load	Male	Female	
Lap Pool - 27M x 25 YD	7015	15	468	234	234	
Activity Pool	4111	15	275	138	138	
Required Fixture Count	**Occ.**	**WC**	**Urinals**	**Lavs**	**Showers**	**Drinking Fountain**
Men	372	5	5	5	8	
Women	372	6	/	5	8	
Totals	744	11	5	10	16	4

Provided Fixture Count	WC	Urinals	Lavs	Showers	Drinking Fountain
Men's Locker Room	4	5	4	5	
Women's Locker Room	6	/	4	7	
Family Changing Rooms	2	/	2	2	
Pool Deck	/	/	/	2	4
Level 2 Restrooms	2	/	2	/	
Total Fixtures	14	5	12	16	4

els architecture+ urban design
2040 Addison St, Berkeley, CA 94704
510.549.2929 | elsarch.com

PROJECT:

PIEDMONT COMMUNITY POOL

777 MAGNOLIA AVENUE PIEDMONT, CA 94611

CLIENT:

CITY OF PIEDMONT

120 VISTA AVENUE PIEDMONT, CA 94611

PROJECT TEAM:

ARCHITECT:
ELS ARCHITECTURE AND URBAN DESIGN
2040 Addison Street
Berkeley, CA 94704
P: 510.549.2929

CIVIL ENGINEER:
BKF ENGINEERS
4670 Willow Road, Suite 250
Pleasanton, CA 94588
P: (925) 396-7704

LANDSCAPE ARCHITECT:
SWA
2200 Bridgeway
Sausalito, CA 94965
P: 415.332.5100

STRUCTURAL ENGINEER:
FORELL/ELSESSER ENGINEERS, INC.
160 Pine Street, 6th Floor
San Francisco, CA 94111
P: 415.837.0700

MEP / FIRE PROTECTION:
GUTTMANN & BLAEVOET
1620 Montgomery Street, Suite 230
San Francisco, CA 94111
P: 415.655.4000

AQUATICS:
AQUATICS DESIGN GROUP
2226 Faraday Avenue
Carlsbad, CA 92008
P: 760.438.8400

SPECIFICATIONS
TOPFLIGHT SPECS
49 Geary Street, Suite 230
San Francisco, CA 94108-5748
P: 415.546.6033

REVISION

NUMBER	DATE	DESCRIPTION

ISSUE:
100% DESIGN DEVELOPMENT

DATE:
APRIL 30, 2022

STAMP:

NOT FOR CONSTRUCTION

SHEET TITLE:

CODE ANALYSIS, GENERAL NOTES

SHEET NUMBER:

A002

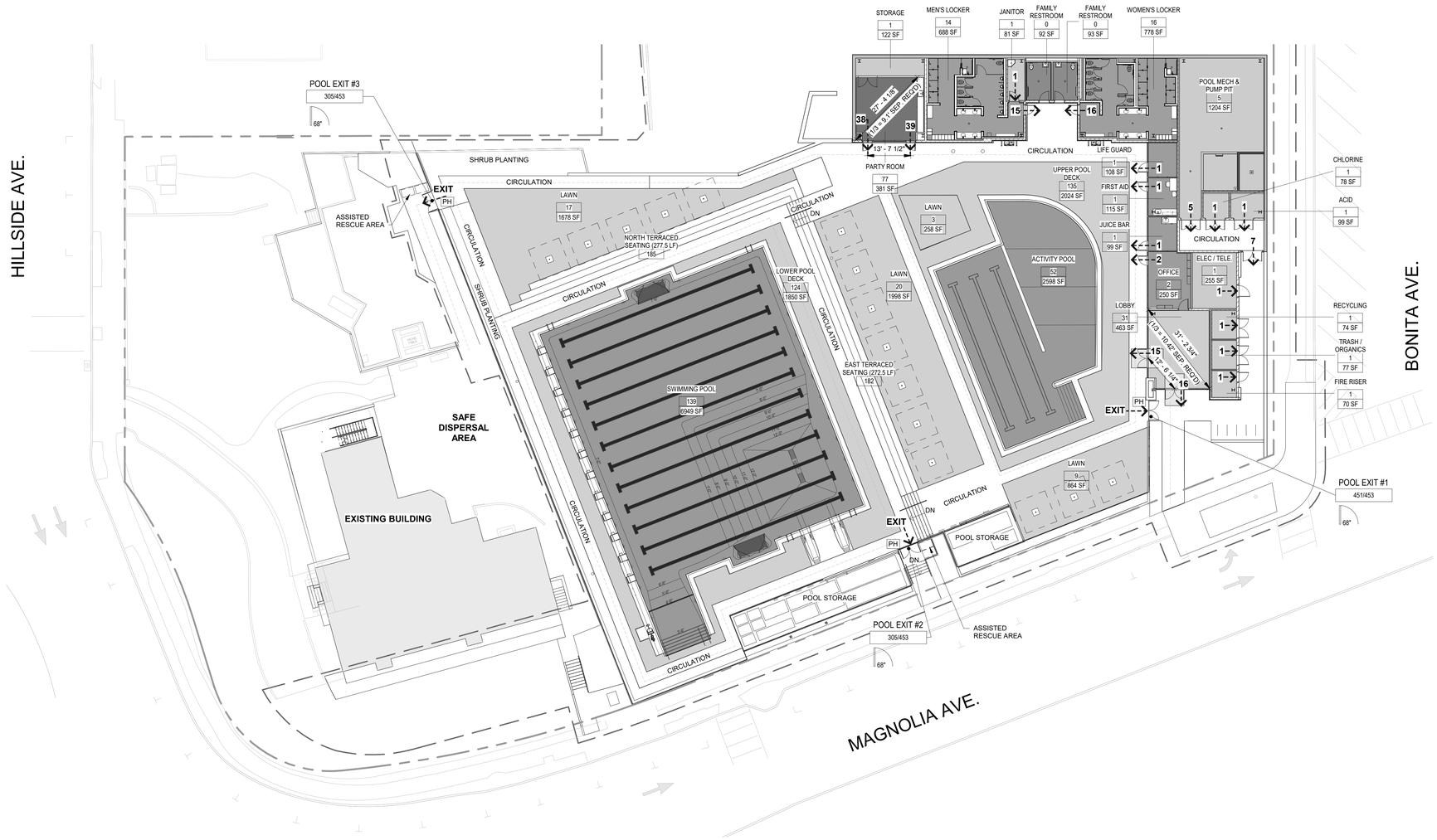

1 EGRESS PLAN - LEVEL 1
1/16" = 1'-0"

EGRESS SCHEDULE - LEVEL 1

ROOM NAME	OCCUP.	OLF		AREA	OCCUP. LOAD	# EXITS
INTERIOR						
POOL MECH & PUMP PIT	S-2	300	GSF	1,204 SF	5	1
LIFE GUARD	B	150	GSF	108 SF	1	1
FIRST AID	B	150	GSF	115 SF	1	1
JUICE BAR	B	150	GSF	99 SF	1	1
CHLORINE	S-1	300	GSF	78 SF	1	1
ACID	S-1	300	GSF	99 SF	1	1
MEN'S LOCKER	B	50	GSF	688 SF	14	1
WOMEN'S LOCKER	B	50	GSF	778 SF	16	1
JANITOR	S-2	300	GSF	81 SF	1	1
STORAGE	S-2	300	GSF	122 SF	1	1
OFFICE	B	150	GSF	250 SF	2	1
ELEC / TELE.	S-2	300	GSF	255 SF	1	1
RECYCLING	S-2	300	GSF	74 SF	1	1
FIRE RISER	S-2	300	GSF	70 SF	1	1
TRASH / ORGANICS	S-2	300	GSF	77 SF	1	1
FAMILY RESTROOM	B	0	N/A	92 SF	0	1
FAMILY RESTROOM	B	0	N/A	93 SF	0	1
PARTY ROOM	B	5	NSF	381 SF	77	1
LOBBY	B	15	NSF	463 SF	31	2
INTERIOR				5,127 SF	156	
EXTERIOR						
ACTIVITY POOL	A-5	50	GSF	2,598 SF	52	
SWIMMING POOL	A-5	50	GSF	6,949 SF	139	
LAWN	A-5	100	GSF	1,678 SF	17	
LAWN	A-5	100	GSF	1,998 SF	20	
LOWER POOL DECK	A-5	15	GSF	1,850 SF	124	3 TOTAL **
UPPER POOL DECK	A-5	15	GSF	2,024 SF	135	
LAWN	A-5	100	GSF	864 SF	9	
LAWN		100	GSF	258 SF	3	
EAST TERRACED SEATING (272.5 LF)	A-5	1.5	LF	545 SF	182	
NORTH TERRACED SEATING (277.5 LF)	A-5	1.5	LF	568 SF	185	
EXTERIOR				19,333 SF	866	
Grand total				24,460 SF	1022	

POOL & POOL DECK OCCUPANT LOAD:
866 OCCUPANTS + 128 FROM BLDG = 994

- ACCESSORY MECHANICAL AND STORAGE AREAS
- ASSEMBLY USE - LOCKER ROOMS
- ASSEMBLY USE - POOL DECK (UNCONCENTRATED)
- ASSEMBLY USE - STANDING SPACE
- ASSEMBLY USE - UNCONCENTRATED
- BUSINESS USE - GENERAL
- FIXED SEATING
- LAWN
- SWIMMING POOL
- UNOCCUPIED

GENERAL NOTES - EGRESS

1. EXIT SIGNS SHALL BE LOCATED SO THAT THEY ARE READILY VISIBLE AND CLEARLY INDICATE THE DIRECTION OF EGRESS TRAVEL.

2. MEANS OF EGRESS, SPECIFICALLY EXIT DISCHARGE, SHALL BE ILLUMINATED AT ALL TIMES THE SPACE SERVED BY THE MEANS OF EGRESS IS OCCUPIED.

LEGEND

- Name — AREA NAME (SEE EGRESS SCHEDULE)
- 100 — OCCUPANT LOAD
- 95000 — AREA (SF)
- 36" — DOOR WIDTH (CLEARANCE WHEN IN OPEN POSITION PER CBC 1008.1.1)
- 36" — STAIRWAY WIDTH
- EXIT — EXIT NUMBER
- 200/220 — EXIT CAPACITY / ACTUAL NUMBER OF OCCUPANT FLOW
- ACCESSIBLE PATH OF TRAVEL
- 100' — PATH OF TRAVEL DISTANCE TO EXIT
- K-KB — KNOX BOX - SURFACE MOUNTED
- K-KS — KNOX KEY SWITCH
- PH — PANIC HARDWARE
- CR — CARD READER (ON KEY SWITCH CIRCUIT)

COMMON PATH OF EGRESS TRAVEL LIMIT (SPACES WITH 1 EXIT):
A OCCUPANCIES = 75'
B & S OCCUPANCIES = 100'

A & B OCCUPANCIES ARE PERMITTED UP TO 49 OCCUPANTS
S OCCUPANCIES ARE PERMITTED UP TO 29 OCCUPANTS

EXIT ACCESS TRAVEL DISTANCE (CBC TABLE 1017.2):
A & S OCCUPANCIES = 250', FULLY-SPRINKLERED
B OCCUPANCY = 300', FULLY-SPRINKLERED

EGRESS WIDTH CALCULATION:
EGRESS COMPONENT OTHER THAN STAIR: OCCUPANT LOAD X 0.20 = REQUIRED WIDTH (TENNIS COURTS)
EGRESS COMPONENT OTHER THAN STAIR, FULLY SPRINKLERED W/ VOICE ALARM COMMUNICATION SYSTEM: OCCUPANT LOAD X .15 = REQUIRED EXIT WIDTH (INCHES)
EXIT STAIRS: OCCUPANT LOAD X 0.20 = REQUIRED EXIT WIDTH (INCHES)

NOTE: OCCUPANT LOAD FACTORS ARE CALCULATED USING EXCEPTIONS UNDER 1005.3.1 (STAIRS) & 1005.3.2 (OTHER EGRESS COMPONENTS) **FOR BUILDINGS EQUIPPED WITH AN AUTOMATIC FIRE SPRINKLER SYSTEM AND AN EMERGENCY VOICE/ALARM COMMUNICATION SYSTEM.**

els architecture+ urban design
2040 Addison St, Berkeley, CA 94704
510.549.2929 | elsarch.com

PROJECT:

PIEDMONT COMMUNITY POOL
777 MAGNOLIA AVENUE
PIEDMONT, CA 94611

CLIENT:

CITY OF PIEDMONT
120 VISTA AVENUE PIEDMONT, CA 94611

PROJECT TEAM:

ARCHITECT:
ELS ARCHITECTURE AND URBAN DESIGN
2040 Addison Street
Berkeley, CA 94704
P: 510.549.2929

CIVIL ENGINEER:
BKF ENGINEERS
4670 Willow Road, Suite 250
Pleasanton, CA 94588
P: (925) 396-7704

LANDSCAPE ARCHITECT:
SWA
2200 Bridgeway
Sausalito, CA 94965
P: 415.332.5100

STRUCTURAL ENGINEER:
FORELL/ELSESSER ENGINEERS, INC.
160 Pine Street, 6th Floor
San Francisco, CA 94111
P: 415.837.0700

MEP / FIRE PROTECTION:
GUTTMANN & BLAEVOET
1620 Montgomery Street, Suite 230
San Francisco, CA 94111
P: 415.655.4000

AQUATICS:
AQUATICS DESIGN GROUP
2226 Faraday Avenue
Carlsbad, CA 92008
P: 760.438.8400

SPECIFICATIONS
TOPFLIGHT SPECS
49 Geary Street, Suite 230
San Francisco, CA 94108-5748
P: 415.546.6033

REVISION

NUMBER	DATE	DESCRIPTION

ISSUE:
100% DESIGN DEVELOPMENT

DATE:
APRIL 30, 2022

STAMP:

NOT FOR CONSTRUCTION

SHEET TITLE:
EGRESS PLAN - LEVEL 1

SHEET NUMBER:
A003

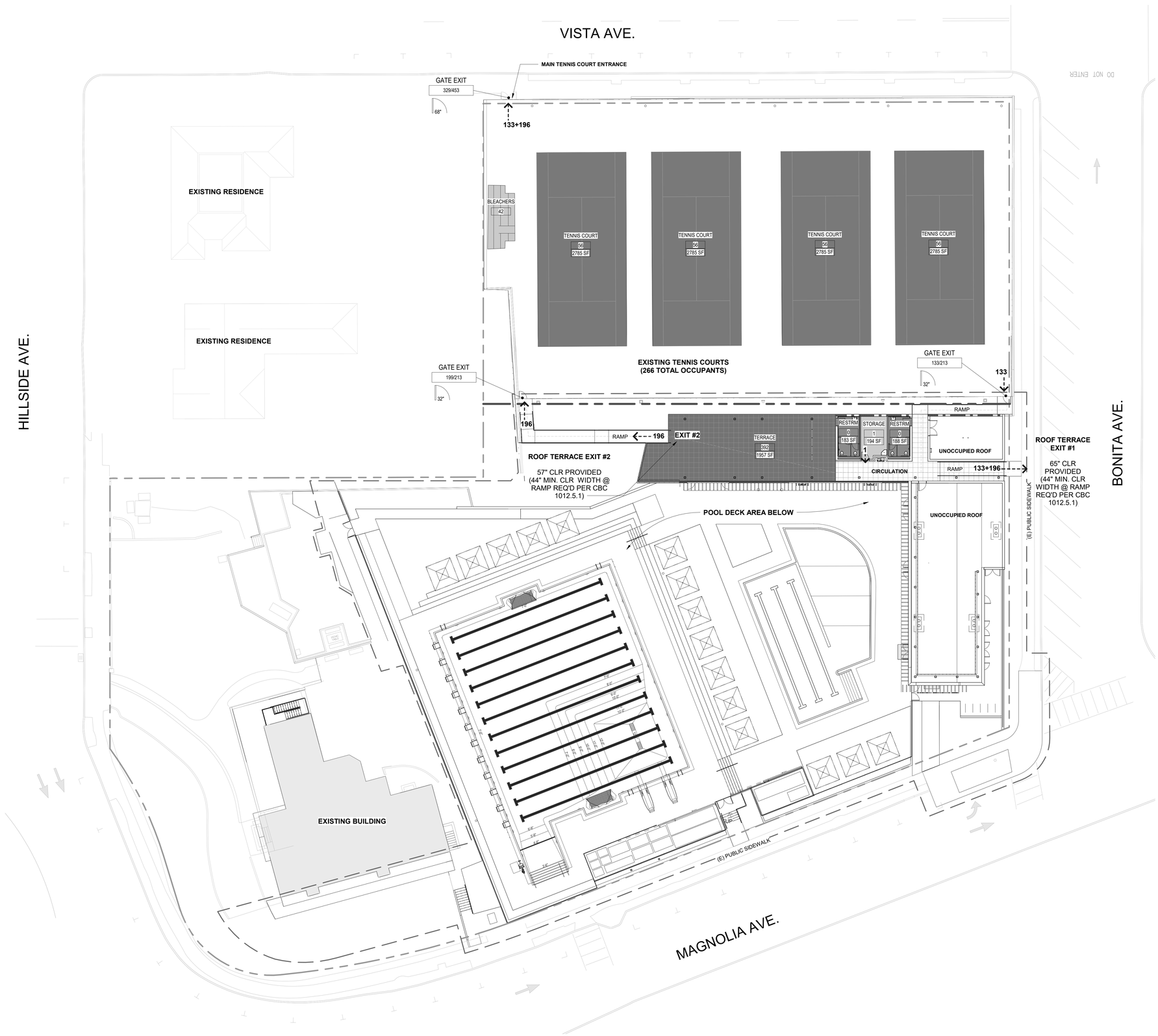

1 EGRESS PLAN - LEVEL 2
1/16" = 1'-0"

EGRESS SCHEDULE - LEVEL 2

ROOM NAME	OCCUP.	OLF		AREA	OCCUP. LOAD	# EXITS
INTERIOR						
STORAGE		300	GSF	194 SF	1	1
RESTRM		0	N/A	183 SF	0	
RESTRM		0	N/A	188 SF	0	
EXTERIOR						
TENNIS COURT	A-5	50	GSF	2,785 SF	56	
TENNIS COURT	A-5	50	GSF	2,785 SF	56	
TENNIS COURT	A-5	50	GSF	2,785 SF	56	
TENNIS COURT	A-5	50	GSF	2,785 SF	56	
BLEACHERS	A-5	1.5	LF	250 SF	42	
TERRACE	A-3	5	NSF	1,957 SF	392	2
				13,911 SF	659	

- ACCESSORY MECHANICAL AND STORAGE AREAS
- ASSEMBLY USE - FIXED SEATING
- ASSEMBLY USE - STANDING SPACE
- TENNIS COURTS
- UNOCCUPIED

GENERAL NOTES - EGRESS

1. EXIT SIGNS SHALL BE LOCATED SO THAT THEY ARE READILY VISIBLE AND CLEARLY INDICATE THE DIRECTION OF EGRESS TRAVEL.

2. MEANS OF EGRESS, SPECIFICALLY EXIT DISCHARGE, SHALL BE ILLUMINATED AT ALL TIMES THE SPACE SERVED BY THE MEANS OF EGRESS IS OCCUPIED.

LEGEND

- Name — AREA NAME (SEE EGRESS SCHEDULE)
- 100 — OCCUPANT LOAD
- 95000 — AREA (SF)
- 36" — DOOR WIDTH (CLEARANCE WHEN IN OPEN POSITION PER CBC 1008.1.1)
- 36" — STAIRWAY WIDTH
- EXIT — EXIT NUMBER
- 200/220 — EXIT CAPACITY / ACTUAL NUMBER OF OCCUPANT FLOW
- ACCESSIBLE PATH OF TRAVEL
- 100' — PATH OF TRAVEL DISTANCE TO EXIT
- K-KB — KNOX BOX - SURFACE MOUNTED
- K-KS — KNOX KEY SWITCH
- PH — PANIC HARDWARE
- CR — CARD READER (ON KEY SWITCH CIRCUIT)

COMMON PATH OF EGRESS TRAVEL LIMIT (SPACES WITH 1 EXIT):
A OCCUPANCIES = 75'
B & S OCCUPANCIES = 100'

A & B OCCUPANCIES ARE PERMITTED UP TO 49 OCCUPANTS
S OCCUPANCIES ARE PERMITTED UP TO 29 OCCUPANTS

EXIT ACCESS TRAVEL DISTANCE (CBC TABLE 1017.2):
A & S OCCUPANCIES = 250', FULLY-SPRINKLERED
B OCCUPANCY = 300', FULLY-SPRINKLERED

EGRESS WIDTH CALCULATION:
EGRESS COMPONENT OTHER THAN STAIR: OCCUPANT LOAD X 0.20 = REQUIRED WIDTH (TENNIS COURTS)
EGRESS COMPONENT OTHER THAN STAIR, FULLY SPRINKLERED W/ VOICE ALARM COMMUNICATION SYSTEM: OCCUPANT LOAD X .15 = REQUIRED EXIT WIDTH (INCHES)
EXIT STAIRS: OCCUPANT LOAD X 0.20 = REQUIRED EXIT WIDTH (INCHES)

NOTE: OCCUPANT LOAD FACTORS ARE CALCULATED USING EXCEPTIONS UNDER 1005.3.1 (STAIRS) & 1005.3.2 (OTHER EGRESS COMPONENTS) **FOR BUILDINGS EQUIPPED WITH AN AUTOMATIC FIRE SPRINKLER SYSTEM AND AN EMERGENCY VOICE/ALARM COMMUNICATION SYSTEM.**

els architecture+ urban design
2040 Addison St, Berkeley, CA 94704
510.549.2929 | elsarch.com

PROJECT:

PIEDMONT COMMUNITY POOL
777 MAGNOLIA AVENUE
PIEDMONT, CA 94611

CLIENT:
CITY OF PIEDMONT
120 VISTA AVENUE PIEDMONT, CA 94611

PROJECT TEAM:

ARCHITECT:
ELS ARCHITECTURE AND URBAN DESIGN
2040 Addison Street
Berkeley, CA 94704
P: 510.549.2929

CIVIL ENGINEER:
BKF ENGINEERS
4670 Willow Road, Suite 250
Pleasanton, CA 94588
P: (925) 396-7704

LANDSCAPE ARCHITECT:
SWA
2200 Bridgeway
Sausalito, CA 94965
P: 415.332.5100

STRUCTURAL ENGINEER:
FORELL/ELSESSER ENGINEERS, INC.
160 Pine Street, 6th Floor
San Francisco, CA 94111
P: 415.837.0700

MEP / FIRE PROTECTION:
GUTTMANN & BLAEVOET
1620 Montgomery Street, Suite 230
San Francisco, CA 94111
P: 415.655.4000

AQUATICS:
AQUATICS DESIGN GROUP
2226 Faraday Avenue
Carlsbad, CA 92008
P: 760.438.8400

SPECIFICATIONS
TOPFLIGHT SPECS
49 Geary Street, Suite 230
San Francisco, CA 94108-5748
P: 415.546.6033

REVISION

NUMBER	DATE	DESCRIPTION

ISSUE:
100% DESIGN DEVELOPMENT

DATE:
APRIL 30, 2022

STAMP:

NOT FOR CONSTRUCTION

SHEET TITLE:
EGRESS PLAN - LEVEL 2

SHEET NUMBER:
A004

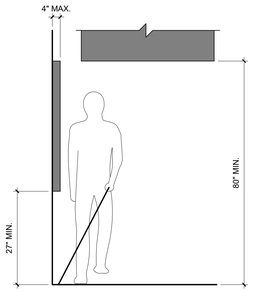

20 LIMITS OF PROTRUDING OBJECTS
N.T.S.

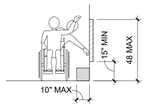

UNOBSTRUCTED SIDE REACH

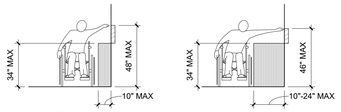

OBSTRUCTED HIGH SIDE REACH

19 SIDE REACH REQUIREMENTS
1/4" = 1'-0"

NOTE: ILLUSTRATION INDICATES REQUIRED CLEARANCES AND DOES NOT NECESSARILY REPRESENT THE MODEL TO BE INSTALLED. SEE SPECIFICATIONS.

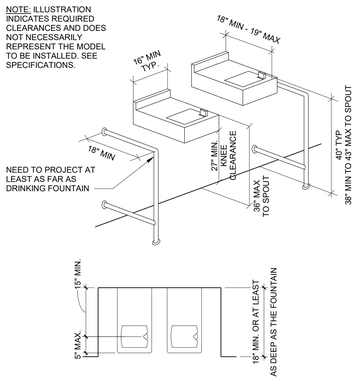

22 TYPICAL HIGH/LOW DRINKING FOUNTAIN
N.T.S.

UNOBSTRUCTED FORWARD REACH

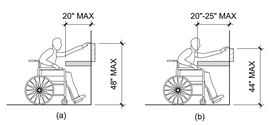

OBSTRUCTED HIGH FORWARD REACH

18 FORWARD REACH REQUIREMENTS
1/4" = 1'-0"

TYP. DIMENSIONS AND MOUNTING HEIGHTS

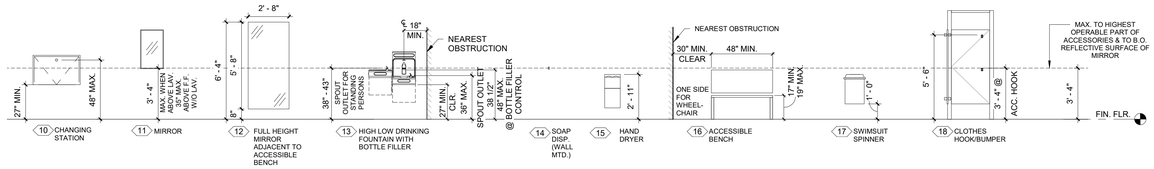

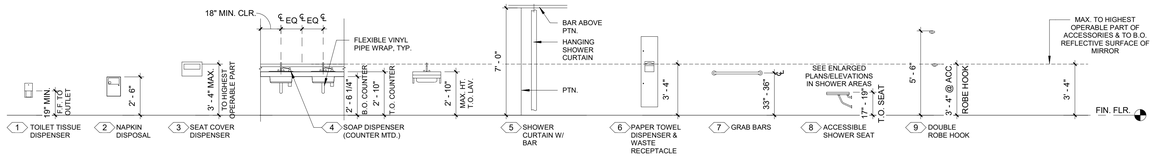

TOILET ACCESSORIES MOUNTING HEIGHT SCHEDULE

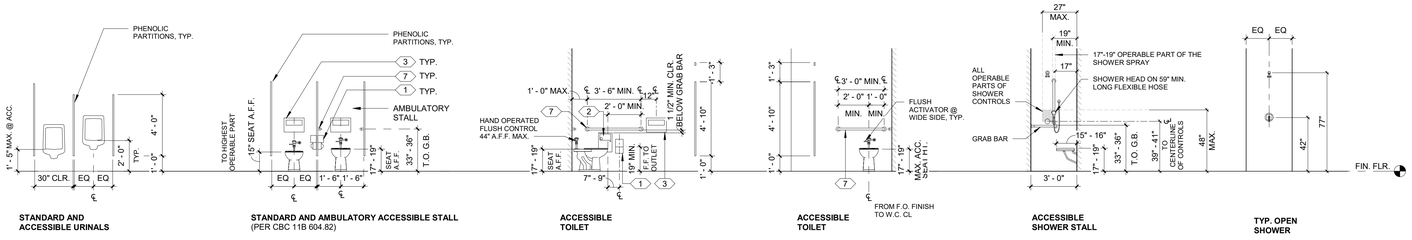

TYPICAL STALL/FIXTURE DIMENSIONS

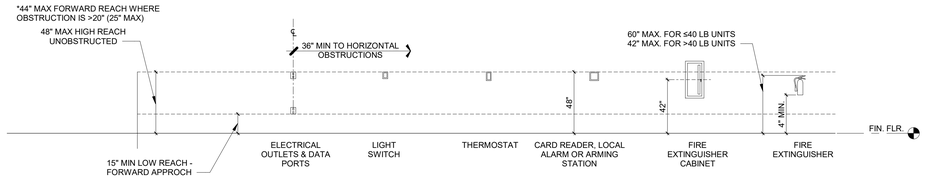

COMMON USE ELEMENT MOUNTING HEIGHTS

ACCESSORY KEY

1. TOILET TISSUE DISPENSER
2. NAPKIN DISPOSAL
3. SEAT COVER DISPENSER
4. SOAP DISPENSER (COUNTER MTD.)
5. SHOWER CURTAIN W/ BAR
6. PAPER TOWEL DISPENSER & WASTE RECEPTACLE
7. GRAB BARS
8. ACCESSIBLE SHOWER SEAT
9. DOUBLE ROBE HOOK - AT ALL SHOWER STALLS AND FAMILY CHANGING ROOMS
10. CHANGING STATION
11. MIRROR
12. FULL HEIGHT MIRROR ADJACENT TO ACCESSIBLE BENCH
13. HIGH LOW DRINKING FOUNTAIN WITH BOTTLE FILLER
14. SOAP DISPENSER (WALL MTD.)
15. HAND DRYER
16. ACCESSIBLE BENCH
17. SWIMSUIT SPINNER
18. CLOTHES HOOK/BUMPER AT EA. TOILET STALL

NOTE: ILLUSTRATION INDICATES REQUIRED CLEARANCES AND DOES NOT NECESSARILY REPRESENT THE MODEL TO BE INSTALLED. SEE SPECIFICATIONS.

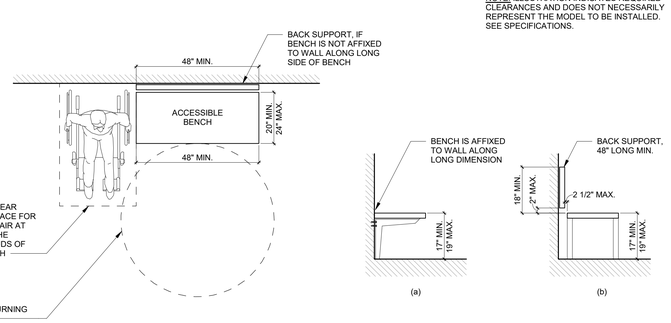

21 ACCESSIBLE BENCH DETAILS
1/2" = 1'-0"

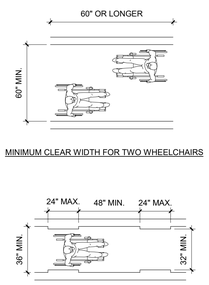

MINIMUM CLEAR WIDTH FOR TWO WHEELCHAIRS

MINIMUM CLEAR WIDTH FOR SINGLE WHEELCHAIRS

13 MIN CLEAR WIDTH OF ACCESSIBLE ROUTES
1/4" = 1'-0"

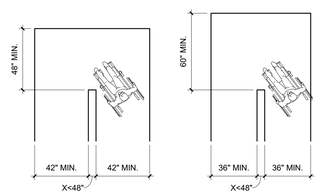

9 CLEAR WIDTH @ 180 DEGREE TURN
1/4" = 1'-0"

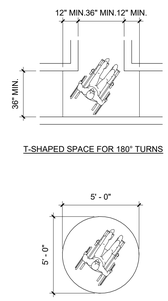

5 WHEELCHAIR TURNING RADIOUS & T-SHAPED SPACE
1/4" = 1'-0"

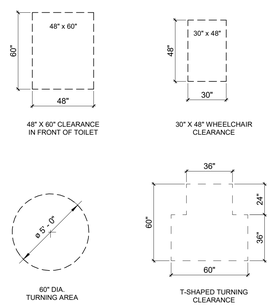

(CODES MAY REQUIRE OTHERS)

1 REQUIRED CLEARANCES SHOWN
1/4" = 1'-0"

els architecture+ urban design
2040 Addison St, Berkeley, CA 94704
510.549.2929 | elsarch.com

PROJECT:

PIEDMONT COMMUNITY POOL

777 MAGNOLIA AVENUE PIEDMONT, CA 94611

CLIENT:

CITY OF PIEDMONT

120 VISTA AVENUE PIEDMONT, CA 94611

PROJECT TEAM:

ARCHITECT:
ELS ARCHITECTURE AND URBAN DESIGN
2040 Addison Street
Berkeley, CA 94704
P: 510.549.2929

CIVIL ENGINEER:
BKF ENGINEERS
4670 Willow Road, Suite 250
Pleasanton, CA 94588
P: (925) 396-7704

LANDSCAPE ARCHITECT:
SWA
2200 Bridgeway
Sausalito, CA 94965
P: 415.332.5100

STRUCTURAL ENGINEER:
FORELL/ELSESSER ENGINEERS, INC.
160 Pine Street, 6th Floor
San Francisco, CA 94111
P: 415.837.0700

MEP / FIRE PROTECTION:
GUTTMANN & BLAEVOET
1620 Montgomery Street, Suite 230
San Francisco, CA 94111
P: 415.655.4000

AQUATICS:
AQUATICS DESIGN GROUP
2226 Faraday Avenue
Carlsbad, CA 92008
P: 760.438.8400

SPECIFICATIONS
TOPFLIGHT SPECS
49 Geary Street, Suite 230
San Francisco, CA 94108-5748
P: 415.546.6033

REVISION

NUMBER	DATE	DESCRIPTION

ISSUE:
100% DESIGN DEVELOPMENT

DATE:
APRIL 30, 2022

STAMP:

NOT FOR CONSTRUCTION

SHEET TITLE:
ACCESSIBILITY DETAILS - PUBLIC & COMMERCIAL BUILDINGS

SHEET NUMBER:
A020

REF 2019 CBC 11B-606, 11B-603.3

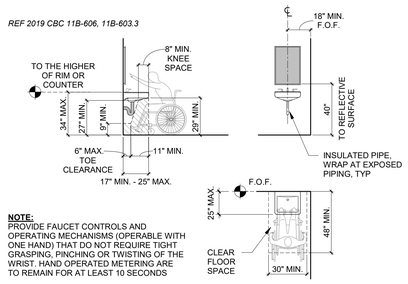

NOTE:
PROVIDE FAUCET CONTROLS AND OPERATING MECHANISMS (OPERABLE WITH ONE HAND) THAT DO NOT REQUIRE TIGHT GRASPING, PINCHING OR TWISTING OF THE WRIST. HAND OPERATED METERING ARE TO REMAIN FOR AT LEAST 10 SECONDS

13 CBC 11B ACCESSIBLE LAVATORY
1/4" = 1'-0"

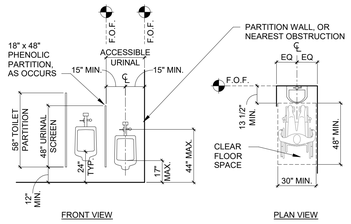

REF 2019 CBC 11B-605

12 CBC 11B ACCESSIBLE URINAL
1/4" = 1'-0"

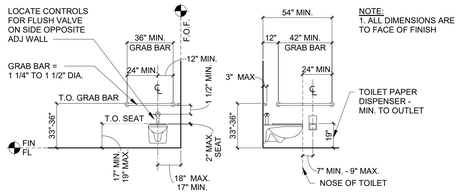

NOTE:
1. ALL DIMENSIONS ARE TO FACE OF FINISH

TOILET PAPER DISPENSER - MIN. TO OUTLET

REF 2019 CBC 11B-603, 11B-609

11 CBC 11B ACCESSIBLE WATER CLOSET
1/4" = 1'-0"

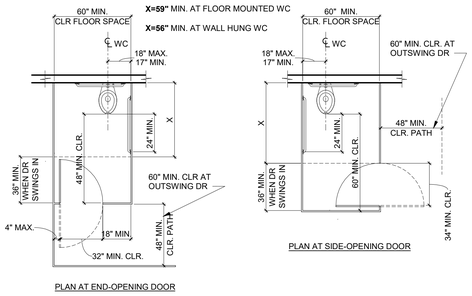

REF 2019 CBC 11B-604.8.1.1.3

10 CBC 11B ACCESSIBLE WATER CLOSET - MULTIPLE ACCOMODATION TOILET
1/4" = 1'-0"

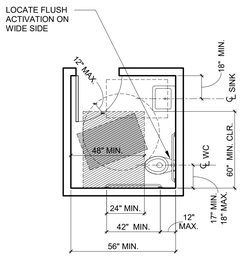

LEGEND
- 30"X48" CLEAR FLOOR SPACE FOR LAVATORY
- 30"X48" CLEAR FLOOR SPACE OUTSIDE OF DOOR SWING
- 60"X48" CLEAR FLOOR SPACE IN FRONT OF TOILET
- 60" DIA. TURNING CIRCLE

NOTE:
WHERE THE TOILET ROOM OR BATHING ROOM IS FOR INDIVIDUAL USE AND A CLEAR FLOOR SPACE COMPLYING WITH SECTION 11B-305.3 IS PROVIDED WITHIN THE ROOM BEYOND THE ARC OF THE DOOR SWING, DOORS SHALL BE PERMITTED TO SWING INTO THE CLEAR FLOOR SPACE OR CLEARANCE REQUIRED FOR ANY FIXTURE.

CBC 11B-603.2.3 EXCEPTION 2

9 CBC 11B ACCESSIBLE WATER CLOSET - SINGLE ACCOMODATION
1/4" = 1'-0"

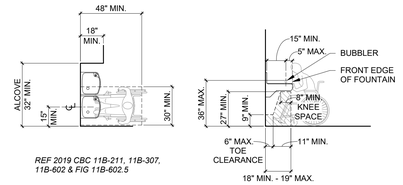

REF 2019 CBC 11B-211, 11B-307, 11B-602 & FIG 11B-602.5

8 CBC 11B ACCESSIBLE DRINKING FOUNTAIN
1/4" = 1'-0"

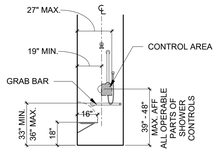

BACK / CONTROL WALL

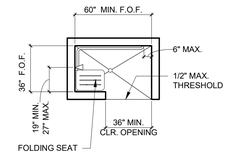

36" X 60" CONFIGURATION

NOTES:

1. PROVIDE FLOOR SLOPES OF 2% MAX. IN AN DIRECTION
2. MAX OPENING IN DRAIN COVER TO BE 1/4"

2019 CBC 11B-608

7 CBC 11B ROLL-IN SHOWER STALLS
1/4" = 1'-0"

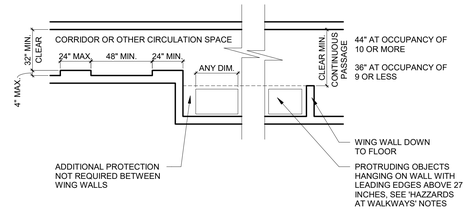

REF. 2019 CBC 11B-403.5

6 CBC 11B PROJECTING OBJECTS
1/4" = 1'-0"

1. PROVIDE 80" HEADROOM FROM THE WALKWAY SURFACE TO ANY OVERHANGING OBSTRUCTION AT WALKS, CORRIDORS, AISLES AND PASSAGEWAYS.
2. WHERE VERTICAL CLEARANCE IS LESS THAN 80", PROVIDE A BARRIER WITH THE LEADING EDGE LOCATED 27" MAXIMUM ABOVE THE FLOOR.
3. LIMIT PROJECTING OBJECTS WITH LEADING EDGES BETWEEN 27" AND 80" ABOVE THE WALKWAY SURFACE TO A MAXIMUM OF 4" AT WALKS, CORRIDORS, AISLES AND PASSAGEWAYS.
4. OBJECTS WITH LEADING EDGES MOUNTED AT OR BELOW 27" ABOVE THE WALKWAY SURFACE MAY PROTRUDE ANY AMOUNT INTO THE WALK SO LONG AS MINIMUM PASSAGE WIDTHS ARE MAINTAINED.
5. PROVIDE A MINIMUM 6" TALL WARNING CURB WHERE THERE ARE ABRUPT CHANGES IN LEVEL EXCEEDING 4" IN VERTICAL DISTANCE, EXCEPT BETWEEN A WALK OR SIDEWALK AND AN ADJACENT STREET OR DRIVEWAY.
6. PROVIDE ROUNDED OR EASED EDGES OF A MINIMUM RADIUS OF 1/8" AT FREE-STANDING SIGNS MOUNTED ON POSTS WHERE THE BOTTOM EDGE OF THE SIGN IS LESS THAN 80" ABOVE THE WALKWAY SURFACE, AND WHERE THE SIGN PROTRUDES FROM ITS MOUNTING POST.

5 CBC 11B HAZARDS AT WALKWAYS
1/4" = 1'-0"

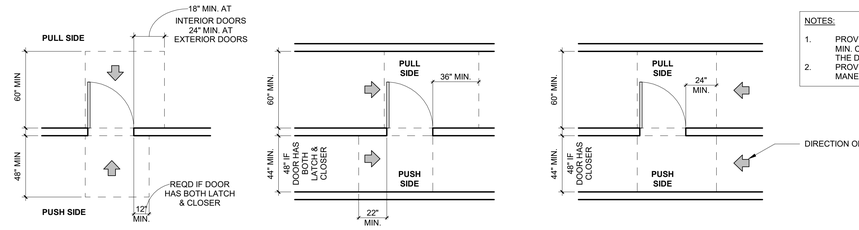

2019 CBC FIG. 11B-404.2.4.1

1 CBC 11B CLEAR SPACE AT DOOR
1/4" = 1'-0"

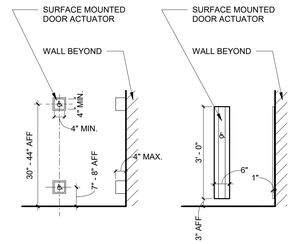

4 POWER ASSISTED DOOR ACTUATORS
1/2" = 1'-0"

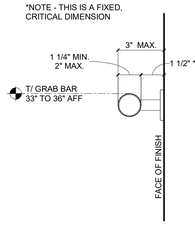

PROVIDE GRAB BARS AND MOUNTING DEVISES THAT MEET THE FOLLOWING STRUCTURAL CRITERIA:

1. GRAB BAR STRESS: 250-LB POINT LOAD
2. GRAB BAR SHEAR STRESS: 250-LB POINT LOAD
3. MOUNTING SHEAR STRESS: LOAD INDUCED BY 250-LB POINT LOAD ON GRAB BAR
4. MOUNTING TENSILE FORCE: DIRECT TENSION INDUCED BY 250-LB LOAD ON GRAB BAR PLUS THE MAX. MOMENT FROM APPLICATION OF 250-LB POINT LOAD

ENSURE THAT GRAB BAR AND ADJACENT WALL AND OTHER SURFACES ARE FREE OF ANY SHARP OR ABRASIVE ELEMENTS. ENSURE EDGES HAVE A MINIMUM RADIUS OF 1/8".

PROVIDE GRAB BARS THAT DO NOT ROTATE WITHIN THEIR FITTINGS.

2019 CBC 11B-609

3 CBC 11B GRAB BAR CLEARANCE
3" = 1'-0"

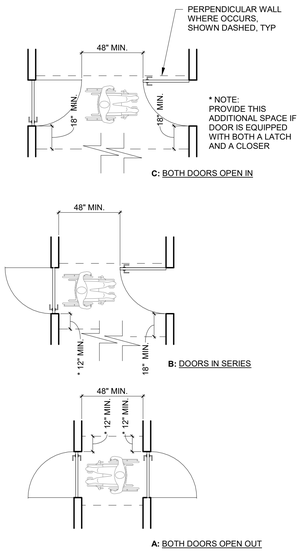

TWO HINGED DOORS IN SERIES FOR DOORS SERVING OTHER THAN A REQUIRED EXIT STAIRWAY

2019 CBC 11B-404.2.6

2 CBC 11B VESTIBULES
1/4" = 1'-0"

NOTES:

1. PROVIDE 36" WIDE DOORS (MIN.) WITH 32" MIN. CLEAR OPENING AS MEASURED WITH THE DOOR OPENED AT 90 DEGREES.
2. PROVIDE A LEVEL AND CLEAR AREA AT MANEUVERING CLEARANCES AT DOORS.

els architecture+ urban design
2040 Addison St, Berkeley, CA 94704
510.549.2929 | elsarch.com

PROJECT:

PIEDMONT COMMUNITY POOL

777 MAGNOLIA AVENUE PIEDMONT, CA 94611

CLIENT:

CITY OF PIEDMONT

120 VISTA AVENUE PIEDMONT, CA 94611

PROJECT TEAM:

ARCHITECT:
ELS ARCHITECTURE AND URBAN DESIGN
2040 Addison Street
Berkeley, CA 94704
P: 510.549.2929

CIVIL ENGINEER:
BKF ENGINEERS
4670 Willow Road, Suite 250
Pleasanton, CA 94588
P: (925) 396-7704

LANDSCAPE ARCHITECT:
SWA
2200 Bridgeway
Sausalito, CA 94965
P: 415.332.5100

STRUCTURAL ENGINEER:
FORELL/ELSESSER ENGINEERS, INC.
160 Pine Street, 8th Floor
San Francisco, CA 94111
P: 415.837.0700

MEP / FIRE PROTECTION:
GUTTMANN & BLAEVOET
1620 Montgomery Street, Suite 230
San Francisco, CA 94111
P: 415.655.4000

AQUATICS:
AQUATICS DESIGN GROUP
2226 Faraday Avenue
Carlsbad, CA 92008
P: 760.438.8400

SPECIFICATIONS
TOPFLIGHT SPECS
49 Geary Street, Suite 230
San Francisco, CA 94108-5748
P: 415.546.6033

REVISION

NUMBER	DATE	DESCRIPTION

ISSUE:
100% DESIGN DEVELOPMENT

DATE:
APRIL 30, 2022

STAMP:

NOT FOR CONSTRUCTION

SHEET TITLE:

ACCESSIBILITY DETAILS - PUBLIC & COMMERCIAL BUILDINGS

SHEET NUMBER:

A021

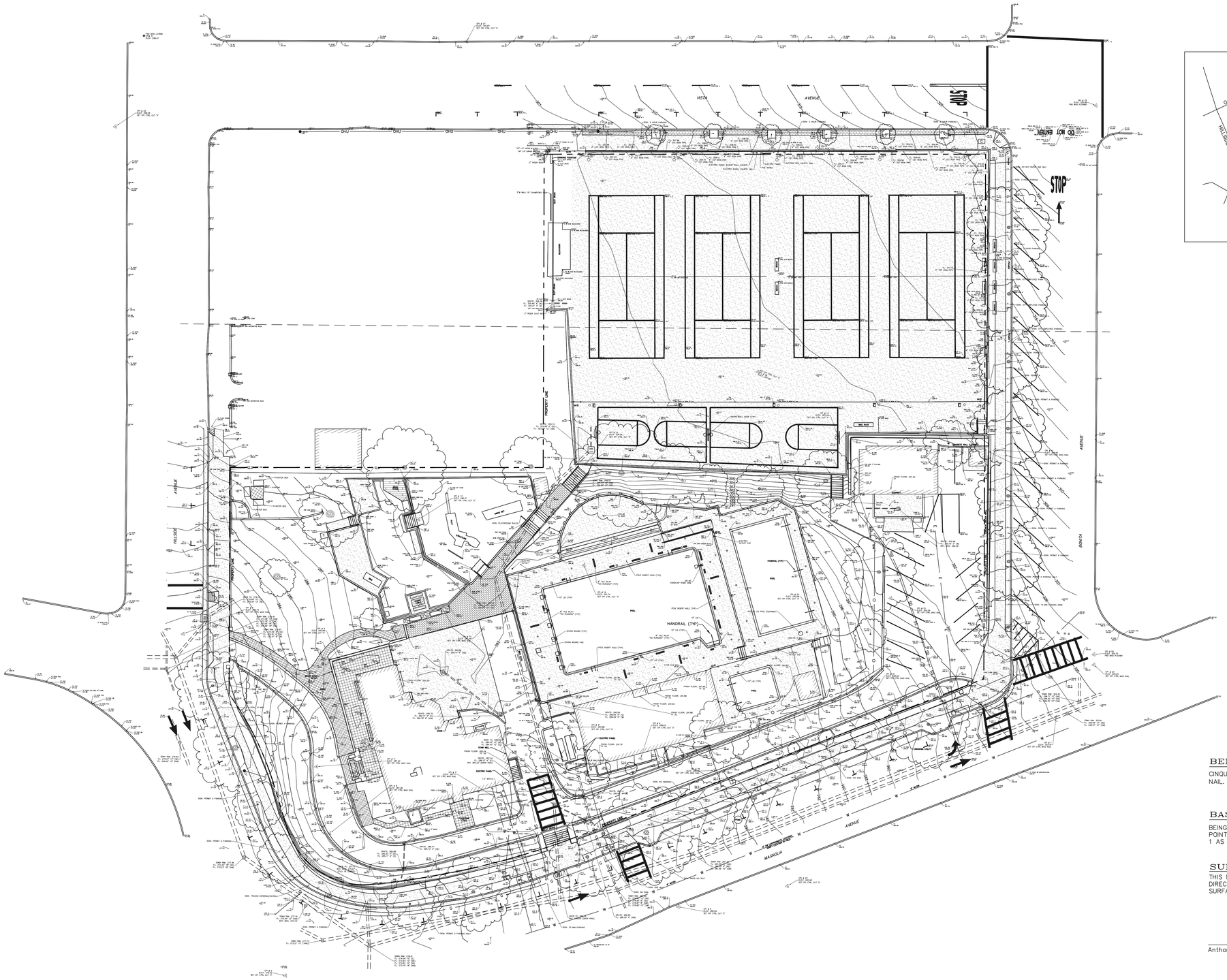

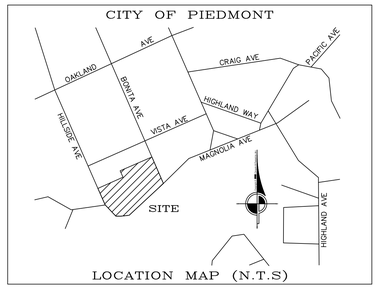

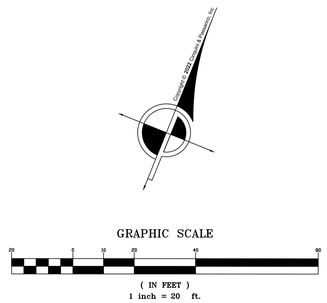

BENCHMARK

CINQUINI & PASSARINO CONTROL POINT NO. 8, BEING A SET MAG NAIL. ELEVATION 287.38 (NAVD88).

BASIS OF BEARINGS

BEING NORTH 58°24'41" EAST FROM CINQUINI & PASSARINO CONTROL POINT NUMBER 8 TO CINQUINI & PASSARINO CONTROL POINT NUMBER 1 AS SHOWN HEREON.

SURVEYOR'S STATEMENT

THIS MAP REPRESENTS A FIELD SURVEY MADE BY ME OR UNDER MY DIRECTION IN JANUARY OF 2021 AND REPRESENTS THE VISUAL SURFACE CONDITIONS AS OF AFORESAID DATE.

Anthony G. Cinquini, P.L.S. 8614 DATE

LEGEND (ALL SYMBOLS MAY NOT APPLY)

- SUBJECT PROPERTY BOUNDARY
- OHE — OVERHEAD ELECTRIC LINE
- OHT — OVERHEAD TELEPHONE LINE
- OHU — OVERHEAD UTILITY LINES (MULTIPLE)
- OHE–HV — OVERHEAD ELECTRIC (HIGH VOLTAGE)
- OHU–HV — OVERHEAD UTILITY LINES (HIGH VOLTAGE)
- G — GAS LINE
- SD — STORM DRAIN LINE
- SS — SANITARY SEWER LINE
- W — WATER LINE
- UGTS — UNDERGROUND TRAFFIC SIGNAL WIRE
- CHAINLINK FENCE
- WOOD FENCE
- WIRE FENCE
- CONCRETE
- PERIMETER OF BUILDING
- SURVEY CONTROL POINT
- + 100.00 SPOT ELEVATION
- CO SANITARY SEWER CLEANOUT
- SANITARY SEWER MANHOLE
- STORM DRAIN MANHOLE
- STORM DRAIN CATCH BASIN
- DRAINAGE INLET
- DRAINAGE INLET
- DRAINAGE DOWNSPOUT
- IRRIGATION CONTROL VALVE
- MW MONITORING WELL
- WELL
- FIRE HYDRANT
- WATER VALVE
- WM WATER METER
- HOSE BIB
- ELECTRIC BOX
- PG&E PG&E VAULT
- ELECTRIC LID
- PP POWER POLE
- JP JOINT UTILITY POLE
- JP JOINT POLE W/STREET LIGHT
- S TRAFFIC SIGNAL
- S TRAFFIC SIGNAL POLE W/STREET LIGHT
- T TELEPHONE POLE
- STREET LIGHT
- LANDSCAPE LIGHT
- LB STREET LIGHT BOX
- S TRAFFIC SIGNAL LIGHT BOX
- TRAFFIC DETECTOR LID
- T TELEPHONE BOX
- TELEPHONE MANHOLE
- CABLE TV BOX
- TEL TELEPHONE VAULT
- GAS VALVE
- G GAS METER
- BOLLARD
- SIGN
- MAILBOX
- FOUND IRON PIPE, SIZE AND TAGGED AS NOTED
- FOUND MONUMENT, SIZED AND STAMPED, AS NOTED
- TREE SYMBOL AND DRIP LINE
- BIRCH

B.O.	BLACK OAK
EUC	EUCALYPTUS
L.A.	LIQUID AMBER
L.O.	LIVE OAK
MAD	MADRONE
ORN	ORNAMENTAL
RWD	REDWOOD
W.O.	WHITE OAK
SYC	SYCAMORE
WIL	WILLOW
AC	ASPHALT
B.F.P.C.V.	BACK FLOW PREVENTION CHECK VALVE
BLDG	BUILDING
BSW	BACK OF SIDEWALK
CMP	CORRUGATED METAL PIPE
DI	DRAINAGE INLET
DN	DOCUMENT NUMBER
DW	DRIVEWAY
DYBUT	DOUBLE YELLOW BUTTON
EP	EDGE PAVING
ER	EDGE OF ROAD
ETW	EDGE TRAVELED WAY
EXIST	EXISTING
FL	FLOWLINE
FG	FINISH GRADE
GB	GRADE BREAK
HC	HANDICAPPED PARKING SPACE
HDPE	HIGH DENSITY POLYETHYLENE
(ITEM NO.)	TITLE REPORT ITEM NUMBER
JB	JUNCTION BOX
LIP	LIP OF GUTTER
NG	NATURAL GROUND
O.R.	OFFICIAL RECORDS
PL	PROPERTY LINE
FNL	FENCE LINE
FNC/FN	FENCE CORNER/INTERSECTION
RWB	RETAINING WALL BOTTOM
RWT	RETAINING WALL TOP
SD	STORM DRAIN
SLB	STREET LIGHT BOX
SWBUT	SINGLE WHITE BUTTON
SYBUT	SINGLE YELLOW BUTTON
TB	TOP OF BANK
TOE	TOE OF BANK
TC	TOP OF CURB
BRC	BACK OF ROLLED CURB
TSB	TRAFFIC SIGNAL BOX
TW	TOP OF WALL
OH	OVERHEAD

els architecture+ urban design
2040 Addison St, Berkeley, CA 94704
510.549.2929 | elsarch.com

PROJECT:

PIEDMONT COMMUNITY POOL

777 MAGNOLIA AVENUE PIEDMONT, CA 94611

CLIENT:

CITY OF PIEDMONT

120 VISTA AVENUE PIEDMONT, CA 94611

PROJECT TEAM:

ARCHITECT:
ELS ARCHITECTURE AND URBAN DESIGN
2040 Addison Street
Berkeley, CA 94704
P: 510.549.2929

CIVIL ENGINEER:
BKF ENGINEERS
4670 Willow Road, Suite 250
Pleasanton, CA 94588
P: (925) 396-7704

LANDSCAPE ARCHITECT:
SWA
2200 Bridgeway
Sausalito, CA 94965
P: 415.332.5100

STRUCTURAL ENGINEER:
FORELL/ELSESSER ENGINEERS, INC.
160 Pine Street, 6th Floor
San Francisco, CA 94111
P: 415.837.0700

MEP / FIRE PROTECTION:
GUTTMANN & BLAEVOET
1620 Montgomery Street, Suite 230
San Francisco, CA 94111
P: 415.655.4000

AQUATICS:
AQUATICS DESIGN GROUP
2226 Faraday Avenue
Carlsbad, CA 92008
P: 760.438.8400

SPECIFICATIONS
TOPFLIGHT SPECS
49 Geary Street, Suite 230
San Francisco, CA 94108-5748
P: 415.546.6033

REVISION

NUMBER	DATE	DESCRIPTION

ISSUE:
100% DESIGN DEVELOPMENT

DATE:
APRIL 30, 2022

STAMP:

NOT FOR CONSTRUCTION

SHEET TITLE:
EXISTING CONDITIONS

SHEET NUMBER:
C1.00

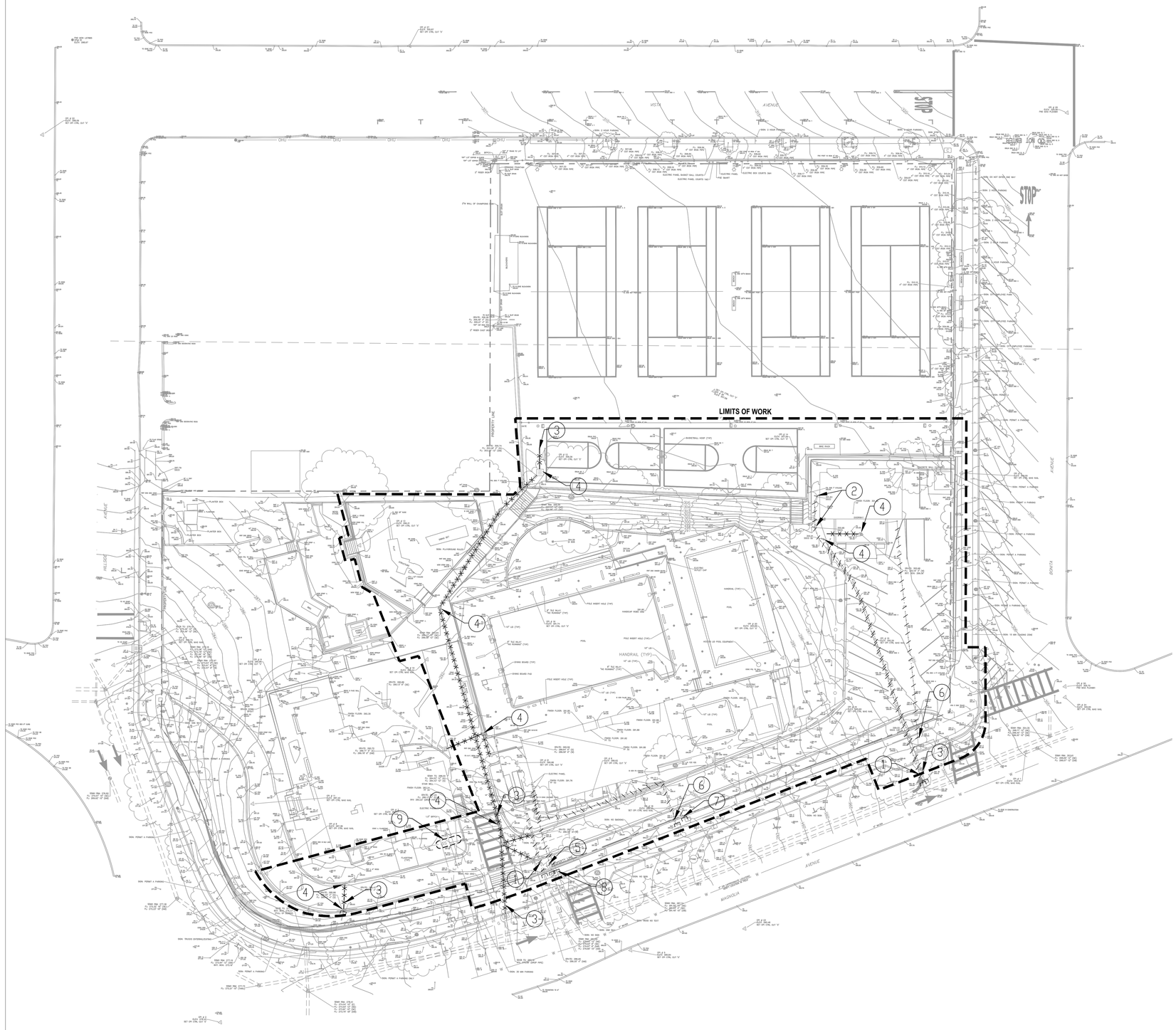

DEMOLITION KEYNOTES

1. REMOVE EXISTING SANITARY SEWER PIPING , CUT AND CAP WHERE NEEDED AND ABANDON IN PLACE
2. REMOVE EXISTING SANITARY SEWER STRUCTURES (MANHOLES, CLEANOUTS, ETC.)
3. REMOVE EXISTING STORM DRAIN PIPING, CUT AND CAP WHERE NEEDED AND ABANDON IN PLACE
4. REMOVE EXISTING STORM DRAIN STRUCTURES (MANHOLES, AREA DRAINS, ETC.)
5. REMOVE EXISTING GAS LINES, CUT AND CAP WHERE NEEDED AND ABANDON IN PLACE
6. REMOVE EXISTING ELECTRICAL LINES, CUT AND CAP WHERE NEEDED AND ABANDON IN PLACE
7. CUT AND CAP EXISTING TELECOMMUNICATION LINES AND ABANDON IN PLACE
8. CUT AND CAP EXISTING WATER LINE AND ABANDON IN PLACE
9. EXISTING UTILITIES IN THIS AREA TO REMAIN AND BE PROTECTED IN PLACE.

GENERAL NOTES

1. ALL DEMOLITION REQUIRES A JOB NUMBER FROM BAY AREA AIR QUALITY MANAGEMENT DISTRICT (BAAQMD). CONTRACTOR SHALL APPLY FOR NECESSARY PERMITS PRIOR TO DEMOLITION.
2. CONTRACTOR SHALL PROTECT PEDESTRIANS FROM DEMOLITION WORK PER CBC 3303.2 AND CBC 3303.6
3. CONTRACTOR SHALL PREVENT SURFACE WATER AND GROUNDWATER ACCUMULATION IN TRENCHES BY DEWATERING.
4. CONTRACTOR SHALL COORDINATE WITH THE CITY FOR THE REMOVAL OF EXISTING WATER LINES AND ANY EXISTING WATER METERS.
5. ALL ABANDON UTILITIES THAT ARE 6" OR GREATER SHALL BE REMOVED COMPLETELY. FOR UTILITIES LESS THAN 6", ABANDON IN PLACE OR REMOVE IF IN CONFLICT WITH NEW BUILD.
6. FOR ADDITIONAL SITE DEMOLITION INFORMATION SEE ARCHITECTURAL DEMOLITION SITE PLAN ON SHEET A100.
7. ALL UTILITY LINES WITHIN THE LIMIT OF WORK NOT IDENTIFIED FOR DEMOLITION SHALL REMAIN AND PROTECTED IN PLACE.
8. EXISTING WATER SERVICE SHALL BE ABANDONED PER CITY STANDARDS.
9. CONTRACTOR SHALL OBTAIN ENCROACHMENT PERMIT WITHIN PUBLIC RIGHT OF WAY.
10. REFER TO SHEET L400 LANDSCAPE FOR TREE DEMOLITION INFORMATION.
11. STREET CLEANING: THE PRIME CONTRACTOR OR DEVELOPER IS TO HIRE A STREET CLEANING CONTRACTOR TO CLEAN UP DIRT AND DEBRIS FROM CITY STREETS THAT ARE ATTRIBUTABLE TO THE DEVELOPMENT'S CONSTRUCTION ACTIVITIES. THE STREET CLEANING CONTRACTOR IS TO HAVE THE CAPABILITY OF SWEEPING THE STREETS WITH BOTH A BROOM-TYPE SWEEPER AND A REGENERATIVE AIR VACUUM SWEEPER, AS DIRECTED BY THE PUBLIC WORKS DIRECTOR, OR HIS/HER DESIGNATED REPRESENTATIVE.
12. CONTRACTOR TO SUBMIT TRAFFIC CONTROL PLAN FOR DEMO WORK TO CITY FOR ACCEPTANCE AND ISSUANCE OF RIGHT OF WAY PERMIT.

LEGEND

—E—J—V—V—V—	CUT AND CAP EXISTING UTILITY AND ABANDON IN PLACE, PER CITY STANDARDS
—X—X—X—X—X—X—	DEMO AND REMOVE EXISTING UTILITIES 6" AND GREATER
— — — — —	LIMITS OF WORK

GRAPHIC SCALE

-20 0 10 20 40 80

(IN FEET)
1 inch = 20 ft.

els architecture+ urban design
2040 Addison St, Berkeley, CA 94704
510.549.2929 | elsarch.com

PROJECT:

PIEDMONT COMMUNITY POOL

777 MAGNOLIA AVENUE PIEDMONT, CA 94611

CLIENT:

CITY OF PIEDMONT

120 VISTA AVENUE PIEDMONT, CA 94611

PROJECT TEAM:

ARCHITECT:
ELS ARCHITECTURE AND URBAN DESIGN
2040 Addison Street
Berkeley, CA 94704
P: 510.549.2929

CIVIL ENGINEER:
BKF ENGINEERS
4670 Willow Road, Suite 250
Pleasanton, CA 94588
P: (925) 396-7704

LANDSCAPE ARCHITECT:
SWA
2200 Bridgeway
Sausalito, CA 94965
P: 415.332.5100

STRUCTURAL ENGINEER:
FORELL/ELSESSER ENGINEERS, INC.
160 Pine Street, 6th Floor
San Francisco, CA 94111
P: 415.837.0700

MEP / FIRE PROTECTION:
GUTTMANN & BLAEVOET
1620 Montgomery Street, Suite 230
San Francisco, CA 94111
P: 415.655.4000

AQUATICS:
AQUATICS DESIGN GROUP
2226 Faraday Avenue
Carlsbad, CA 92008
P: 760.438.8400

SPECIFICATIONS
TOPFLIGHT SPECS
49 Geary Street, Suite 230
San Francisco, CA 94108-5748
P: 415.546.6033

REVISION

NUMBER	DATE	DESCRIPTION

ISSUE:
100% DESIGN DEVELOPMENT

DATE:
APRIL 30, 2022

STAMP:

NOT FOR CONSTRUCTION

SHEET TITLE:

UTILITY DEMOLITION PLAN

SHEET NUMBER:

C2.00

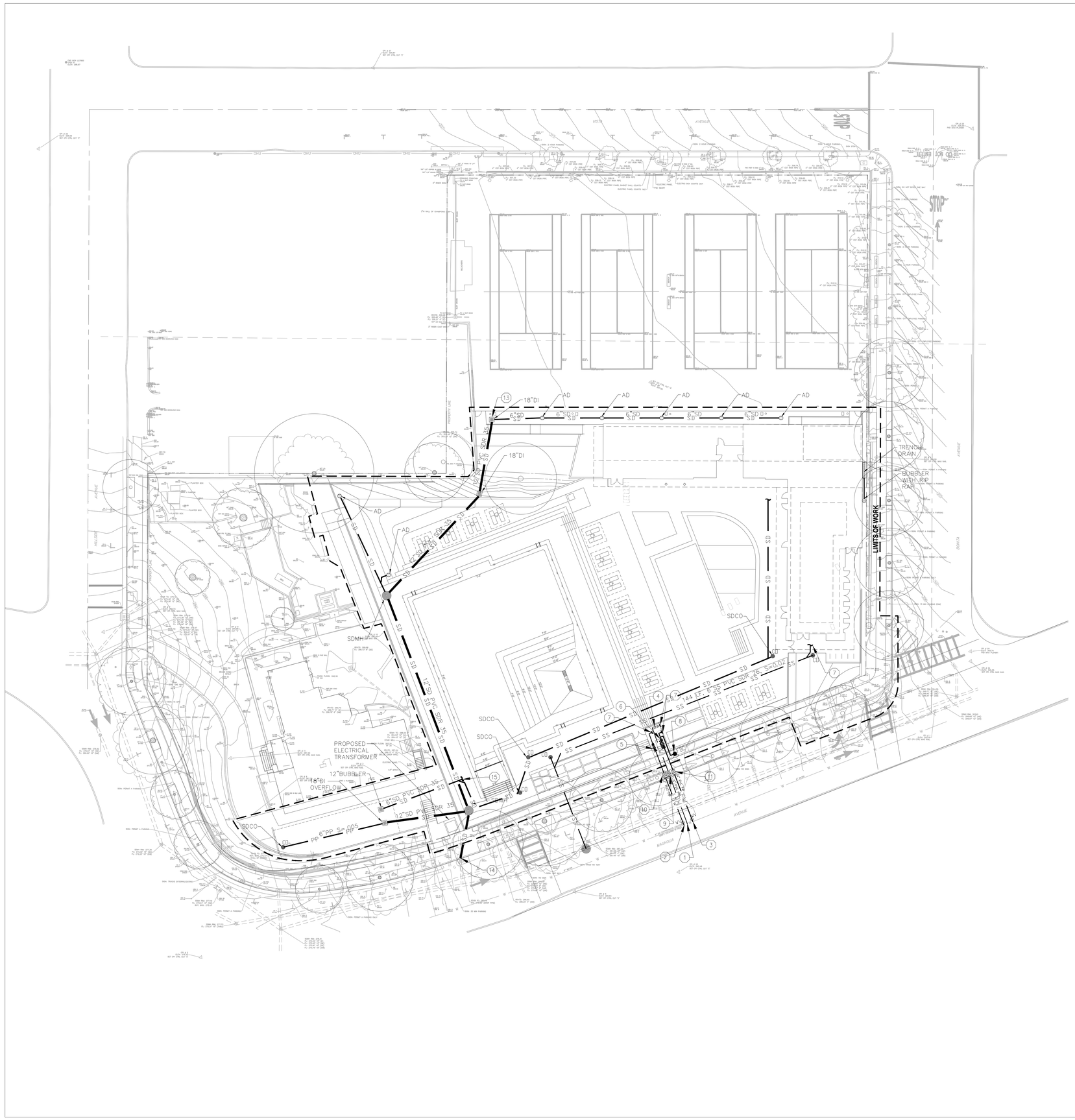

UTILITIES KEYNOTES

1. TIE (P) 1.5" IRRIGATION WATER LINE TO (E) 6" DOMESTER WATER MAIN
2. TIE (P) 3" DOMESTIC WATER LINE TO (E) 6" DOMESTIC WATER MAIN
3. TIE (P) 4" FIRE WATER LINE TO (E) 6" DOMESTIC WATER MAIN
4. (P) IRRIGATION BACKFLOW PREVENTOR
5. (P) 3" DOMESTIC WATER BACKFLOW PREVENTER
6. (P) 4" FIRE WATER BACKFLOW PREVENTER
7. CONTINUED TO POINT OF CONNECTION TO BUILDING
8. (P) FIRE DEPARTMENT CONNECTION
9. (P) IRRIGATION WATER METER
10. (P) DOMESTIC WATER METER
11. (P) FIRE WATER METER
12. CONNECT (P) SANITARY SEWER MANHOLE TO EXISTING SEWER MAIN
13. (P) STORM DRAIN INLET TO CONNECT TO (E) STORM DRAIN SYSTEM
14. TIE (P) 12" STORM DRAIN LINE TO (E) STORM DRAIN INLET
15. COLLECT BOTH POOL DRAINS (SEE POOL PLANS FOR CONTINUATION) AND BUILDING RAINWATER LEADERS AND TIE TO (P) 6" STORM DRAIN OUTFALL.

LEGEND

DW — DW	DOMESTIC WATER PIPE
FW — FW	FIRE WATER PIPE
SS — SS	SANITARY SEWER PIPE
SD — SD	STORM DRAIN PIPE
PP — PP	PERFORATED DRAIN PIPE
LTHW — LTHW	LOW TEMPERATURE HOT WATER PIPE SERVICE AND RETURN
CW	CHILLED WATER PIPE SERVICE AND RETURN
COM	TELECOMMUNICATION CONDUIT (SHOWN FOR COORDINATION)
E	ELECTRICAL CONDUIT (SHOWN FOR COORDINATION)
	LIMITS OF WORK
CO	CLEANOUT
	IRRIGATION BACKFLOW PREVENTOR
	DOUBLE CHECK DETECTOR BACKFLOW
	DOUBLE CHECK DETECTOR BACKFLOW
FDC	FIRE DEPARTMENT CONNECTION
FH	FIRE HYDRANT
WM	WATER METER
	POINT OF CONNECTION
	SANITARY SEWER & STORM DRAIN MANHOLE
WV	WATER VALVE
	PROPOSED AREA DRAIN
	DRAIN INLET / BUBBLER

GRAPHIC SCALE

20 0 10 20 40 80

(IN FEET)
1 inch = 20 ft.

els architecture+ urban design
2040 Addison St, Berkeley, CA 94704
510.549.2929 | elsarch.com

PROJECT:

PIEDMONT COMMUNITY POOL

777 MAGNOLIA AVENUE PIEDMONT, CA 94611

CLIENT:

CITY OF PIEDMONT

120 VISTA AVENUE PIEDMONT, CA 94611

PROJECT TEAM:

ARCHITECT:
ELS ARCHITECTURE AND URBAN DESIGN
2040 Addison Street
Berkeley, CA 94704
P: 510.549.2929

CIVIL ENGINEER:
BKF ENGINEERS
4670 Willow Road, Suite 250
Pleasanton, CA 94588
P: (925) 396-7704

LANDSCAPE ARCHITECT:
SWA
2200 Bridgeway
Sausalito, CA 94965
P: 415.332.5100

STRUCTURAL ENGINEER:
FORELL/ELSESSER ENGINEERS, INC.
160 Pine Street, 6th Floor
San Francisco, CA 94111
P: 415.837.0700

MEP / FIRE PROTECTION:
GUTTMANN & BLAEVOET
1620 Montgomery Street, Suite 230
San Francisco, CA 94111
P: 415.655.4000

AQUATICS:
AQUATICS DESIGN GROUP
2226 Faraday Avenue
Carlsbad, CA 92008
P: 760.438.8400

SPECIFICATIONS
TOPFLIGHT SPECS
49 Geary Street, Suite 230
San Francisco, CA 94108-5748
P: 415.546.6033

REVISION

NUMBER	DATE	DESCRIPTION

ISSUE:
100% DESIGN DEVELOPMENT

DATE:
APRIL 30, 2022

STAMP:

NOT FOR CONSTRUCTION

SHEET TITLE:

SITE UTILITY PLAN

SHEET NUMBER:

C3.00

IMPERVIOUS PAVING AREA

IMPERVIOUS ROOF AREA

SELF-TREATING POOL AREA

PERVIOUS LANDSCAPE AREA

TREATMENT AREA

DRAINAGE MANAGEMENT BORDER

GRAPHIC SCALE

(IN FEET)
1 inch = 20 ft.

	DMA	DMA TOTAL AREA (SF)	IMPERVIOUS AREA (SF)	ROOF IMPERVIOUS AREA (SF)	PERVIOUS AREA (SF)	SELF-TREAT POOL AREA (SF)	TREE CREDITS (SF)	REQUIRED TREATMENT (SF)	PROVIDED TREATMENT (SF)
SITE	A	27,859	15,362	0	12,497	0	0	615	1,028
ROOF	B	7,873	0	7,873	0	0	0	315	0 *
LAP POOL	C	6,949	0	0	0	6,949	0	0	0
POOL	D	2,574	0	0	0	2,574	0	0	0
	TOTAL	45,255	15,362	7,873	12,497	9,523	0	930	1,028

NOTES:
1. TREATMENT IS 4% OF IMPERVIOUS AREAS.
2. * TREATMENT AREA A HAS BEEN OVERSIZED TO INCLUDE TREATMENT OF DMA A AND DMA B.
3. POOLS ARE SELF-TREATING AREAS AND DO NOT REQUIRE TREATMENT.
4. ~ AREA SHOWN IS IN CITY ROW, NOT SUBJECT TO ON SITE TREATMENT (<10,000 SF).

els architecture+ urban design
2040 Addison St, Berkeley, CA 94704
510.549.2929 | elsarch.com

PROJECT:

PIEDMONT COMMUNITY POOL

777 MAGNOLIA AVENUE PIEDMONT, CA 94611

CLIENT:

CITY OF PIEDMONT

120 VISTA AVENUE PIEDMONT, CA 94611

PROJECT TEAM:

ARCHITECT:
ELS ARCHITECTURE AND URBAN DESIGN
2040 Addison Street
Berkeley, CA 94704
P: 510.549.2929

CIVIL ENGINEER:
BKF ENGINEERS
4670 Willow Road, Suite 250
Pleasanton, CA 94588
P: (925) 396-7704

LANDSCAPE ARCHITECT:
SWA
2200 Bridgeway
Sausalito, CA 94965
P: 415.332.5100

STRUCTURAL ENGINEER:
FORELL/ELSESSER ENGINEERS, INC.
160 Pine Street, 6th Floor
San Francisco, CA 94111
P: 415.837.0700

MEP / FIRE PROTECTION:
GUTTMANN & BLAEVOET
1620 Montgomery Street, Suite 230
San Francisco, CA 94111
P: 415.655.4000

AQUATICS:
AQUATICS DESIGN GROUP
2226 Faraday Avenue
Carlsbad, CA 92008
P: 760.438.8400

SPECIFICATIONS
TOPFLIGHT SPECS
49 Geary Street, Suite 230
San Francisco, CA 94108-5748
P: 415.546.6033

REVISION

NUMBER	DATE	DESCRIPTION

ISSUE:
100% DESIGN DEVELOPMENT

DATE:
APRIL 30, 2022

STAMP:

NOT FOR CONSTRUCTION

SHEET TITLE:
STORMWATER MANAGEMENT PLAN

SHEET NUMBER:
C5.00

els architecture+ urban design
2040 Addison St, Berkeley, CA 94704
510.549.2929 | elsarch.com

PROJECT:

PIEDMONT COMMUNITY POOL
PIEDMONT, CA

CLIENT:

CITY OF PIEDMONT

120 VISTA AVENUE PIEDMONT, CA 94611

PROJECT TEAM:

ARCHITECT:
ELS ARCHITECTURE AND URBAN DESIGN
2040 Addison Street
Berkeley, CA 94704
P: 510.549.2929

CIVIL ENGINEER:
BKF ENGINEERS
4670 Willow Road, Suite 250
Pleasanton, CA 94588
P: (925) 396-7704

LANDSCAPE ARCHITECT:
SWA
2200 Bridgeway
Sausalito, CA 94965
P: 415.332.5100

STRUCTURAL ENGINEER:
FORELL/ELSESSER ENGINEERS, INC.
160 Pine Street, 6th Floor
San Francisco, CA 94111
P: 415.837.0700

MEP / FIRE PROTECTION:
GUTTMANN & BLAEVOET
2351 Powell Street
San Francisco, CA 94133
P: 415.855.4000

AQUATICS:
AQUATICS DESIGN GROUP
2226 Faraday Avenue
Carlsbad, CA 92008
P: 760.438.8400

SPECIFICATIONS
TOPFLIGHT SPECS
49 Geary Street, Suite 230
San Francisco, CA 94108-5748
P: 415.546.6033

REVISION

NUMBER	DATE	DESCRIPTION

0 10' 20'

ISSUE:
100% DESIGN DEVELOPMENT

DATE:
APRIL 30, 2022

STAMP:

NOT FOR CONSTRUCTION

SHEET TITLE:

EXISTING CONDITIONS AERIAL

SHEET NUMBER:

L000

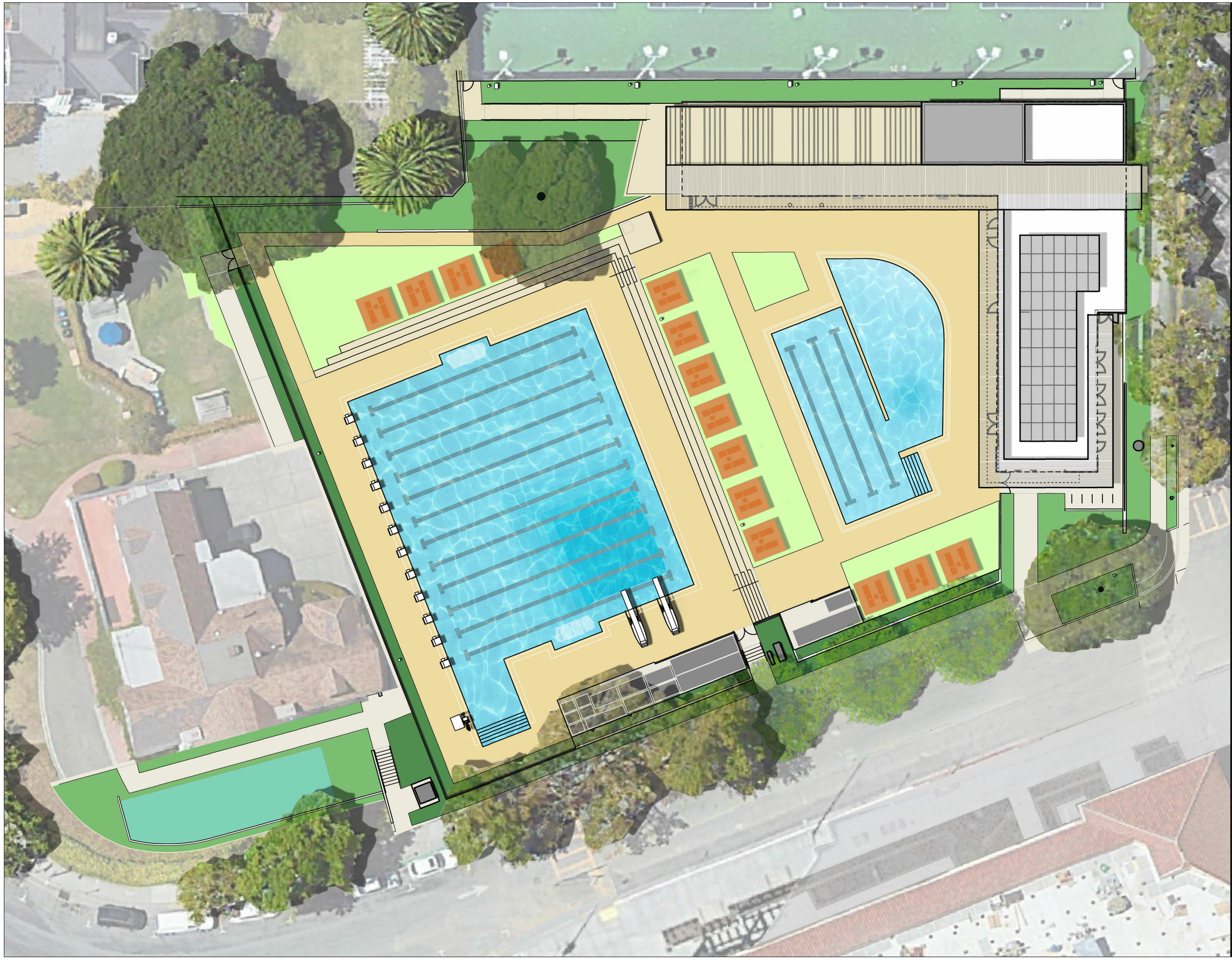

els architecture+ urban design
2040 Addison St, Berkeley, CA 94704
510.549.2929 | elsarch.com

PROJECT:

PIEDMONT COMMUNITY POOL
PIEDMONT, CA

CLIENT:

CITY OF PIEDMONT
120 VISTA AVENUE PIEDMONT, CA 94611

PROJECT TEAM:

ARCHITECT:
ELS ARCHITECTURE AND URBAN DESIGN
2040 Addison Street
Berkeley, CA 94704
P: 510.549.2929

CIVIL ENGINEER:
BKF ENGINEERS
4670 Willow Road, Suite 250
Pleasanton, CA 94588
P: (925) 396-7704

LANDSCAPE ARCHITECT:
SWA
2200 Bridgeway
Sausalito, CA 94965
P: 415.332.5100

STRUCTURAL ENGINEER:
FORELL/ELSESSER ENGINEERS, INC.
160 Pine Street, 6th Floor
San Francisco, CA 94111
P: 415.837.0700

MEP / FIRE PROTECTION:
GUTTMANN & BLAEVOET
2351 Powell Street
San Francisco, CA 94133
P: 415.855.4000

AQUATICS:
AQUATICS DESIGN GROUP
2226 Faraday Avenue
Carlsbad, CA 92008
P: 760.438.8400

SPECIFICATIONS
TOPFLIGHT SPECS
49 Geary Street, Suite 230
San Francisco, CA 94108-5748
P: 415.546.6033

REVISION

NUMBER	DATE	DESCRIPTION

0 10' 20'

ISSUE:
100% DESIGN DEVELOPMENT

DATE:
APRIL 30, 2022

STAMP:

NOT FOR CONSTRUCTION

SHEET TITLE:

ILLUSTRATIVE SITE PLAN

SHEET NUMBER:

L100

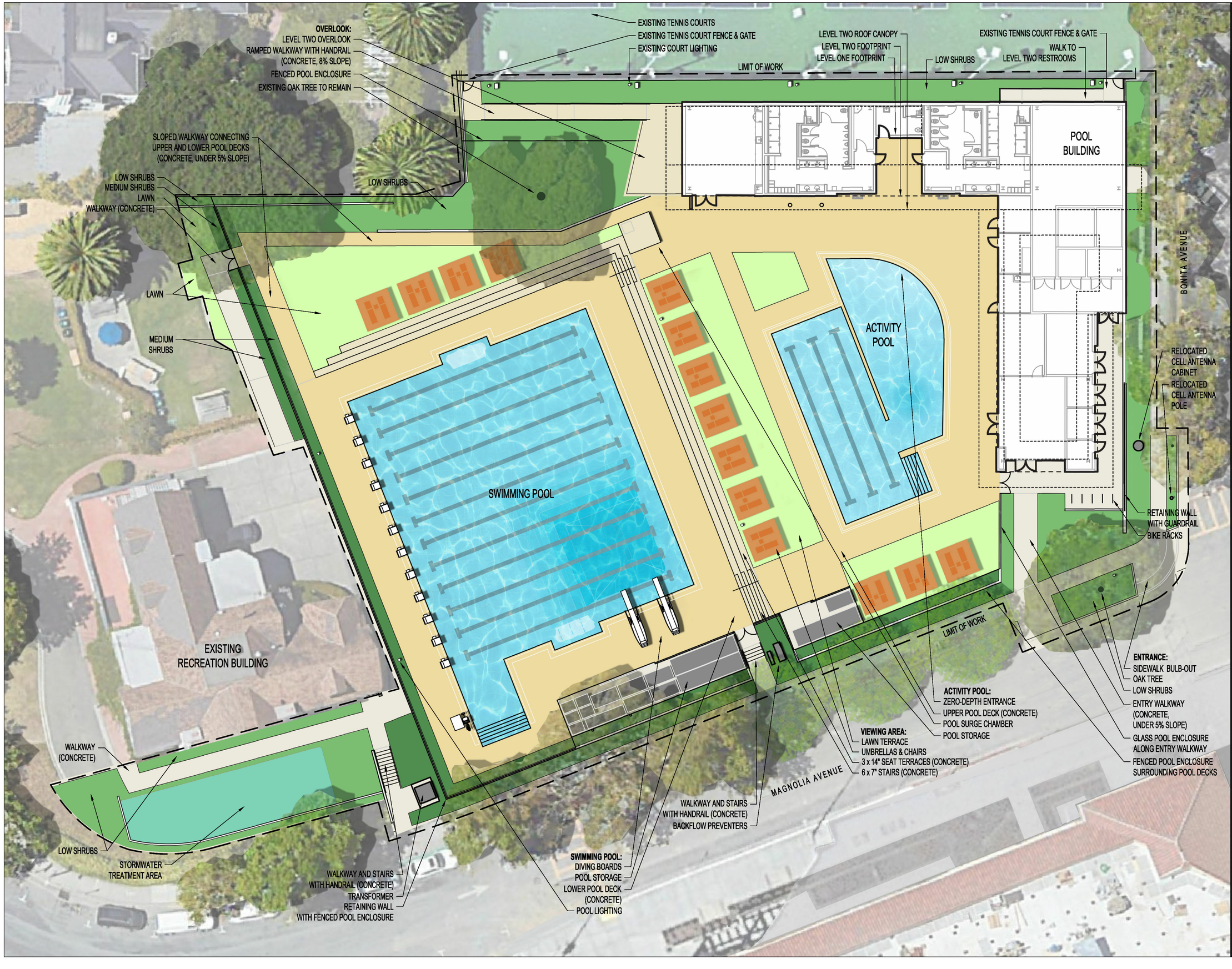

els architecture+ urban design
2040 Addison St, Berkeley, CA 94704
510.549.2929 | elsarch.com

PROJECT:

PIEDMONT COMMUNITY POOL
PIEDMONT, CA

CLIENT:
CITY OF PIEDMONT
120 VISTA AVENUE PIEDMONT, CA 94611

PROJECT TEAM:

ARCHITECT:
ELS ARCHITECTURE AND URBAN DESIGN
2040 Addison Street
Berkeley, CA 94704
P: 510.549.2929

CIVIL ENGINEER:
BKF ENGINEERS
4670 Willow Road, Suite 250
Pleasanton, CA 94588
P: (925) 396-7704

LANDSCAPE ARCHITECT:
SWA
2200 Bridgeway
Sausalito, CA 94965
P: 415.332.5100

STRUCTURAL ENGINEER:
FORELL/ELSESSER ENGINEERS, INC.
160 Pine Street, 6th Floor
San Francisco, CA 94111
P: 415.837.0700

MEP / FIRE PROTECTION:
GUTTMANN & BLAEVOET
2351 Powell Street
San Francisco, CA 94133
P: 415.855.4000

AQUATICS:
AQUATICS DESIGN GROUP
2226 Faraday Avenue
Carlsbad, CA 92008
P: 760.438.8400

SPECIFICATIONS
TOPFLIGHT SPECS
49 Geary Street, Suite 230
San Francisco, CA 94108-5748
P: 415.546.6033

REVISION

NUMBER	DATE	DESCRIPTION

0 10' 20'

ISSUE:
100% DESIGN DEVELOPMENT

DATE:
APRIL 30, 2022

STAMP:

NOT FOR CONSTRUCTION

SHEET TITLE:

LAYOUT PLAN

SHEET NUMBER:

L200

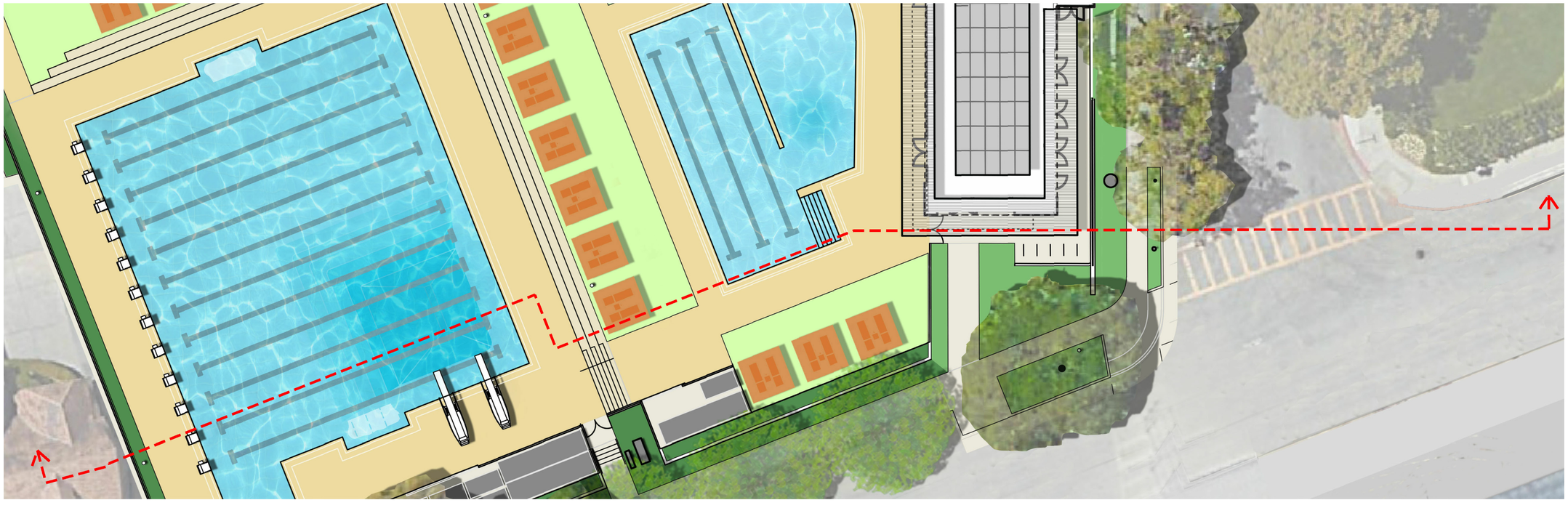

els architecture+ urban design
2040 Addison St, Berkeley, CA 94704
510.549.2929 | elsarch.com

PROJECT:

PIEDMONT COMMUNITY POOL
PIEDMONT, CA

CLIENT:
CITY OF PIEDMONT
120 VISTA AVENUE PIEDMONT, CA 94611

PROJECT TEAM:

ARCHITECT:
ELS ARCHITECTURE AND URBAN DESIGN
2040 Addison Street
Berkeley, CA 94704
P: 510.549.2929

CIVIL ENGINEER:
BKF ENGINEERS
4670 Willow Road, Suite 250
Pleasanton, CA 94588
P: (925) 396-7704

LANDSCAPE ARCHITECT:
SWA
2200 Bridgeway
Sausalito, CA 94965
P: 415.332.5100

STRUCTURAL ENGINEER:
FORELL/ELSESSER ENGINEERS, INC.
160 Pine Street, 6th Floor
San Francisco, CA 94111
P: 415.837.0700

MEP / FIRE PROTECTION:
GUTTMANN & BLAEVOET
2351 Powell Street
San Francisco, CA 94133
P: 415.855.4000

AQUATICS:
AQUATICS DESIGN GROUP
2226 Faraday Avenue
Carlsbad, CA 92008
P: 760.438.8400

SPECIFICATIONS
TOPFLIGHT SPECS
49 Geary Street, Suite 230
San Francisco, CA 94108-5748
P: 415.546.6033

REVISION

NUMBER	DATE	DESCRIPTION

0 10' 20'

ISSUE:
100% DESIGN DEVELOPMENT

DATE:
APRIL 30, 2022

STAMP:

NOT FOR CONSTRUCTION

SHEET TITLE:
SITE SECTIONS

SHEET NUMBER:
L201

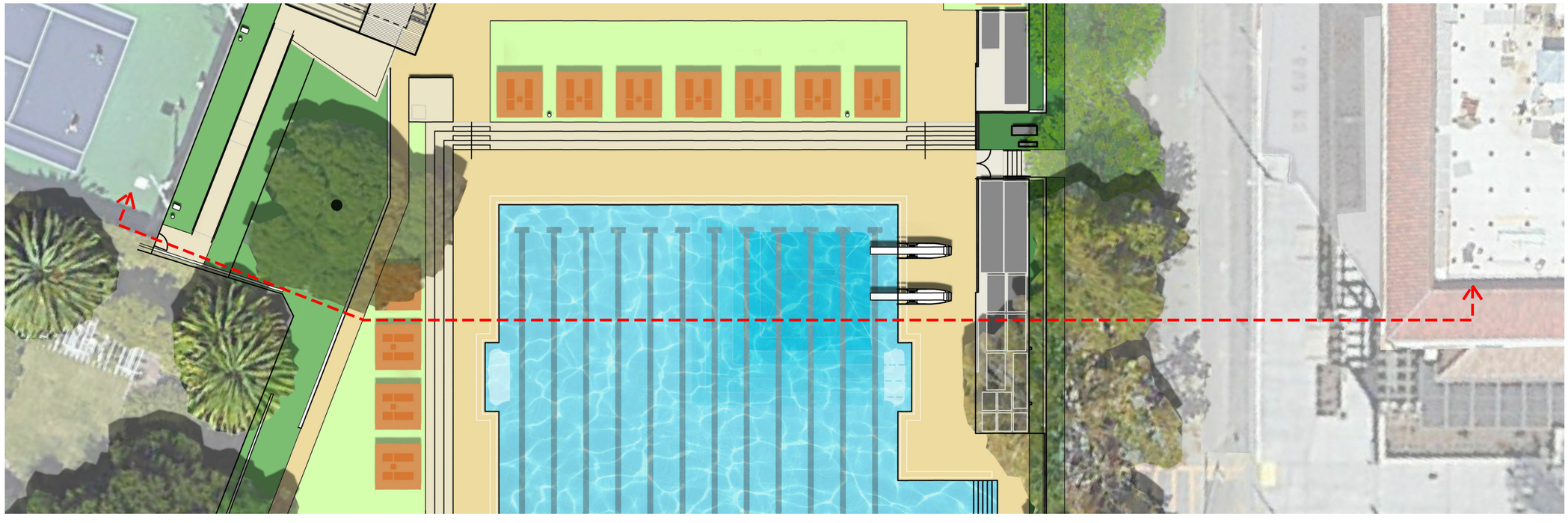

els architecture+ urban design
2040 Addison St, Berkeley, CA 94704
510.549.2929 | elsarch.com

PROJECT:

PIEDMONT COMMUNITY POOL
PIEDMONT, CA

CLIENT:
CITY OF PIEDMONT
120 VISTA AVENUE PIEDMONT, CA 94611

PROJECT TEAM:

ARCHITECT:
ELS ARCHITECTURE AND URBAN DESIGN
2040 Addison Street
Berkeley, CA 94704
P: 510.549.2929

CIVIL ENGINEER:
BKF ENGINEERS
4670 Willow Road, Suite 250
Pleasanton, CA 94588
P: (925) 396-7704

LANDSCAPE ARCHITECT:
SWA
2200 Bridgeway
Sausalito, CA 94965
P: 415.332.5100

STRUCTURAL ENGINEER:
FORELL/ELSESSER ENGINEERS, INC.
160 Pine Street, 6th Floor
San Francisco, CA 94111
P: 415.837.0700

MEP / FIRE PROTECTION:
GUTTMANN & BLAEVOET
2351 Powell Street
San Francisco, CA 94133
P: 415.855.4000

AQUATICS:
AQUATICS DESIGN GROUP
2226 Faraday Avenue
Carlsbad, CA 92008
P: 760.438.8400

SPECIFICATIONS
TOPFLIGHT SPECS
49 Geary Street, Suite 230
San Francisco, CA 94108-5748
P: 415.546.6033

REVISION

NUMBER	DATE	DESCRIPTION

0 10' 20'

ISSUE:
100% DESIGN DEVELOPMENT

DATE:
APRIL 30, 2022

STAMP:

NOT FOR CONSTRUCTION

SHEET TITLE:
SITE SECTIONS

SHEET NUMBER:
L202

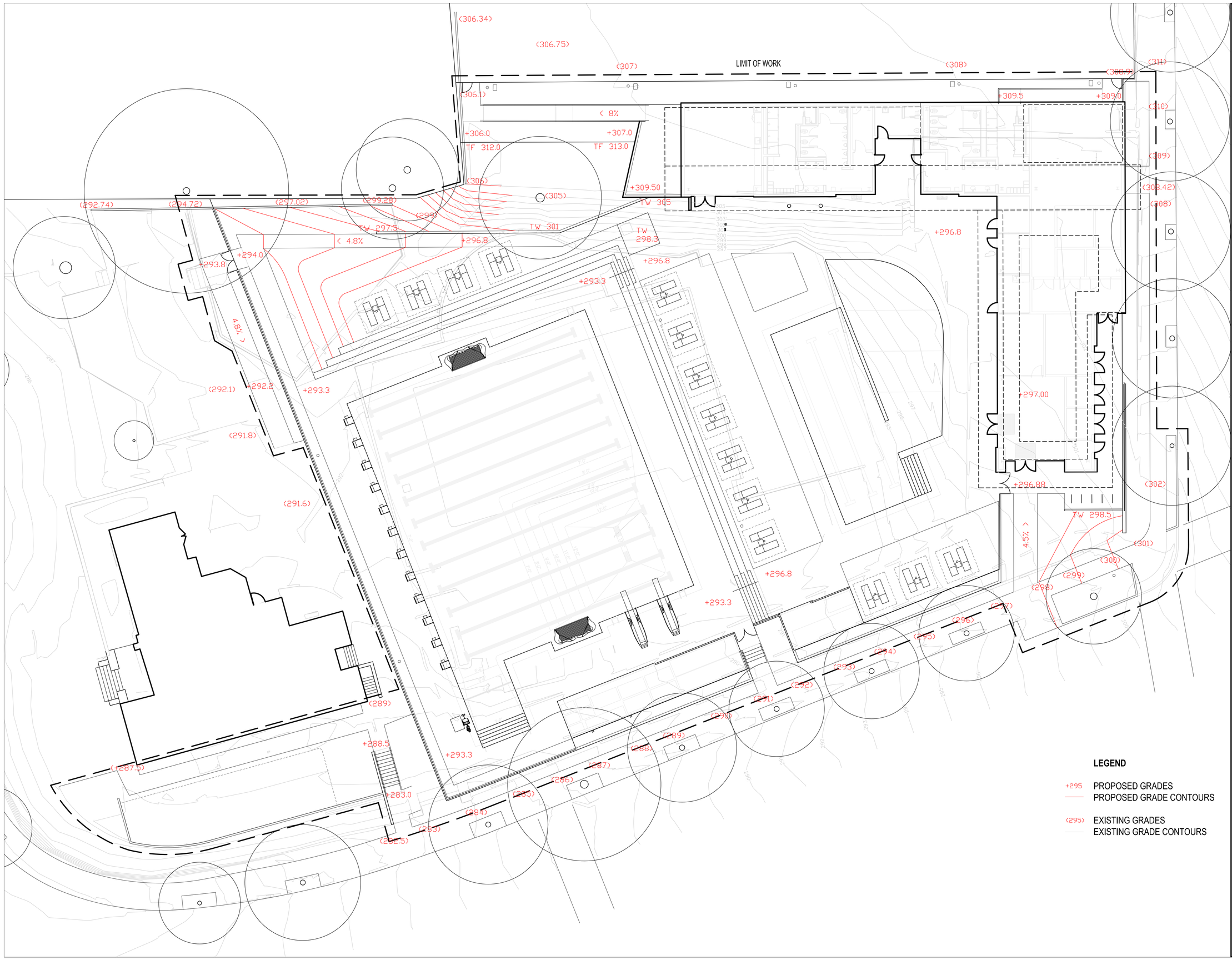

els architecture+ urban design
2040 Addison St, Berkeley, CA 94704
510.549.2929 | elsarch.com

PROJECT:

PIEDMONT COMMUNITY POOL

PIEDMONT, CA

CLIENT:

CITY OF PIEDMONT

120 VISTA AVENUE PIEDMONT, CA 94611

PROJECT TEAM:

ARCHITECT:
ELS ARCHITECTURE AND URBAN DESIGN
2040 Addison Street
Berkeley, CA 94704
P: 510.549.2929

CIVIL ENGINEER:
BKF ENGINEERS
4670 Willow Road, Suite 250
Pleasanton, CA 94588
P: (925) 396-7704

LANDSCAPE ARCHITECT:
SWA
2200 Bridgeway
Sausalito, CA 94965
P: 415.332.5100

STRUCTURAL ENGINEER:
FORELL/ELSESSER ENGINEERS, INC.
160 Pine Street, 6th Floor
San Francisco, CA 94111
P: 415.837.0700

MEP / FIRE PROTECTION:
GUTTMANN & BLAEVOET
2351 Powell Street
San Francisco, CA 94133
P: 415.655.4000

AQUATICS:
AQUATICS DESIGN GROUP
2226 Faraday Avenue
Carlsbad, CA 92008
P: 760.438.8400

SPECIFICATIONS
TOPFLIGHT SPECS
49 Geary Street, Suite 230
San Francisco, CA 94108-5748
P: 415.546.6033

REVISION

NUMBER	DATE	DESCRIPTION

0 10' 20'

ISSUE:
100% DESIGN DEVELOPMENT

DATE:
APRIL 30, 2022

STAMP:

NOT FOR CONSTRUCTION

SHEET TITLE:

GRADING PLAN

SHEET NUMBER:

L300

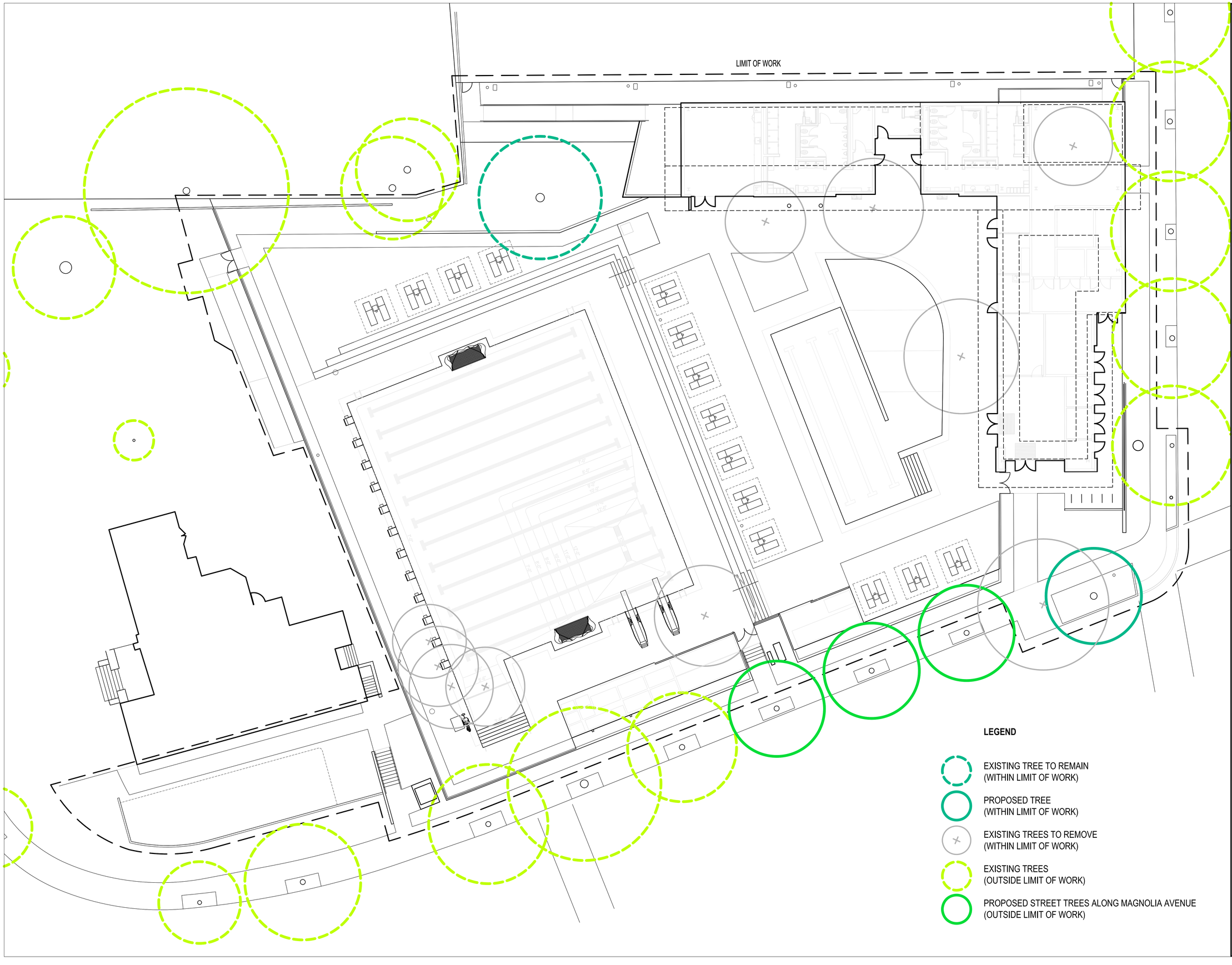

els architecture+ urban design
2040 Addison St, Berkeley, CA 94704
510.549.2929 | elsarch.com

PROJECT:

PIEDMONT COMMUNITY POOL
PIEDMONT, CA

CLIENT:

CITY OF PIEDMONT

120 VISTA AVENUE PIEDMONT, CA 94611

PROJECT TEAM:

ARCHITECT:
ELS ARCHITECTURE AND URBAN DESIGN
2040 Addison Street
Berkeley, CA 94704
P: 510.549.2929

CIVIL ENGINEER:
BKF ENGINEERS
4670 Willow Road, Suite 250
Pleasanton, CA 94588
P: (925) 396-7704

LANDSCAPE ARCHITECT:
SWA
2200 Bridgeway
Sausalito, CA 94965
P: 415.332.5100

STRUCTURAL ENGINEER:
FORELL/ELSESSER ENGINEERS, INC.
160 Pine Street, 6th Floor
San Francisco, CA 94111
P: 415.837.0700

MEP / FIRE PROTECTION:
GUTTMANN & BLAEVOET
2351 Powell Street
San Francisco, CA 94133
P: 415.655.4000

AQUATICS:
AQUATICS DESIGN GROUP
2226 Faraday Avenue
Carlsbad, CA 92008
P: 760.438.8400

SPECIFICATIONS
TOPFLIGHT SPECS
49 Geary Street, Suite 230
San Francisco, CA 94108-5748
P: 415.546.6033

REVISION

NUMBER	DATE	DESCRIPTION

0 10' 20'

ISSUE:
100% DESIGN DEVELOPMENT

DATE:
APRIL 30, 2022

STAMP:

NOT FOR CONSTRUCTION

SHEET TITLE:

TREE PLAN

SHEET NUMBER:

L400

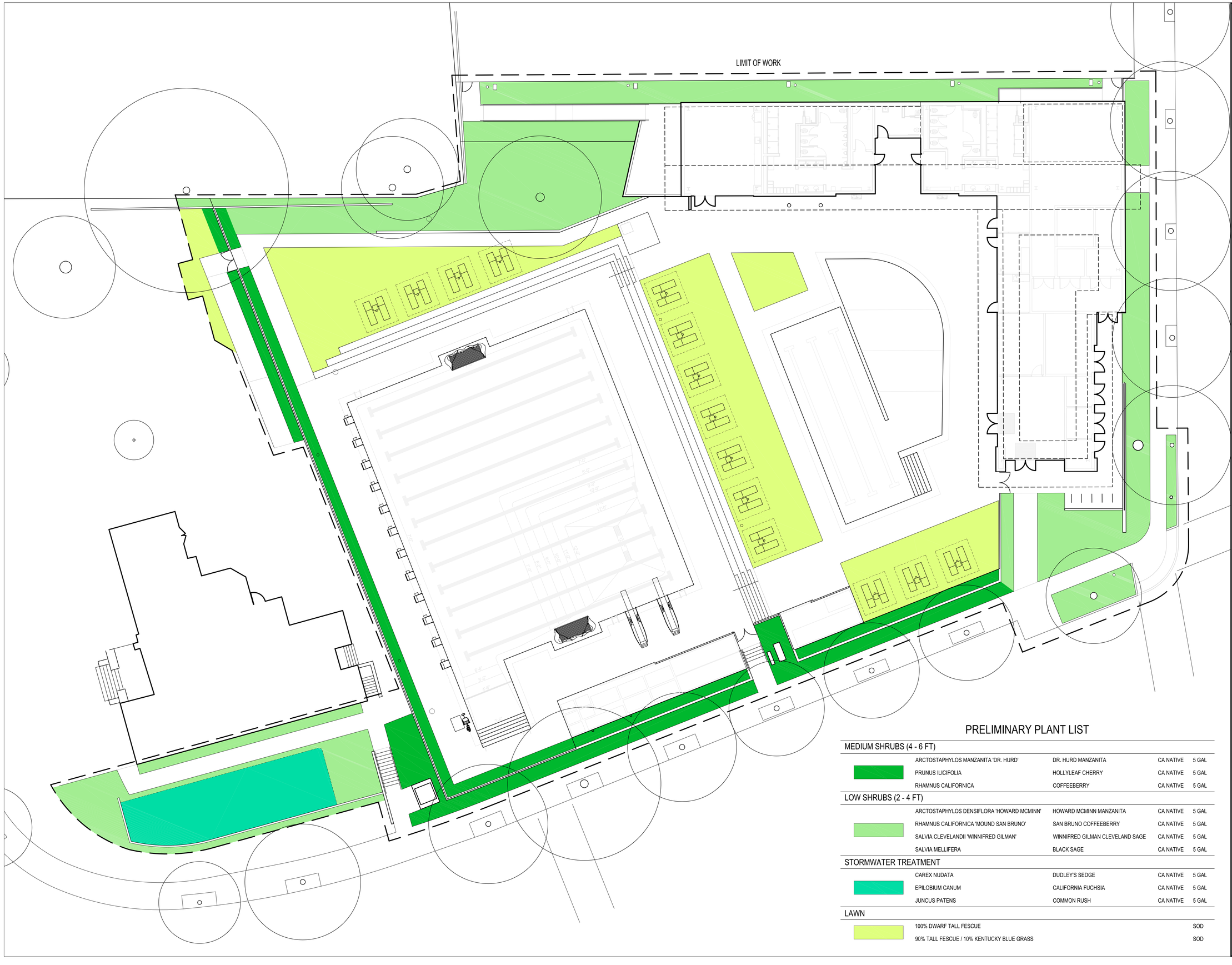

PRELIMINARY PLANT LIST

MEDIUM SHRUBS (4 - 6 FT)				
	ARCTOSTAPHYLOS MANZANITA 'DR. HURD'	DR. HURD MANZANITA	CA NATIVE	5 GAL
	PRUNUS ILICIFOLIA	HOLLYLEAF CHERRY	CA NATIVE	5 GAL
	RHAMNUS CALIFORNICA	COFFEEBERRY	CA NATIVE	5 GAL
LOW SHRUBS (2 - 4 FT)				
	ARCTOSTAPHYLOS DENSIFLORA 'HOWARD MCMINN'	HOWARD MCMINN MANZANITA	CA NATIVE	5 GAL
	RHAMNUS CALIFORNICA 'MOUND SAN BRUNO'	SAN BRUNO COFFEEBERRY	CA NATIVE	5 GAL
	SALVIA CLEVELANDII 'WINNIFRED GILMAN'	WINNIFRED GILMAN CLEVELAND SAGE	CA NATIVE	5 GAL
	SALVIA MELLIFERA	BLACK SAGE	CA NATIVE	5 GAL
STORMWATER TREATMENT				
	CAREX NUDATA	DUDLEY'S SEDGE	CA NATIVE	5 GAL
	EPILOBIUM CANUM	CALIFORNIA FUCHSIA	CA NATIVE	5 GAL
	JUNCUS PATENS	COMMON RUSH	CA NATIVE	5 GAL
LAWN				
	100% DWARF TALL FESCUE			SOD
	90% TALL FESCUE / 10% KENTUCKY BLUE GRASS			SOD

els architecture+ urban design
2040 Addison St, Berkeley, CA 94704
510.549.2929 | elsarch.com

PROJECT:

PIEDMONT COMMUNITY POOL
PIEDMONT, CA

CLIENT:
CITY OF PIEDMONT
120 VISTA AVENUE PIEDMONT, CA 94611

PROJECT TEAM:

ARCHITECT:
ELS ARCHITECTURE AND URBAN DESIGN
2040 Addison Street
Berkeley, CA 94704
P: 510.549.2929

CIVIL ENGINEER:
BKF ENGINEERS
4670 Willow Road, Suite 250
Pleasanton, CA 94588
P: (925) 396-7704

LANDSCAPE ARCHITECT:
SWA
2200 Bridgeway
Sausalito, CA 94965
P: 415.332.5100

STRUCTURAL ENGINEER:
FORELL/ELSESSER ENGINEERS, INC.
160 Pine Street, 6th Floor
San Francisco, CA 94111
P: 415.837.0700

MEP / FIRE PROTECTION:
GUTTMANN & BLAEVOET
2351 Powell Street
San Francisco, CA 94133
P: 415.655.4000

AQUATICS:
AQUATICS DESIGN GROUP
2226 Faraday Avenue
Carlsbad, CA 92008
P: 760.438.8400

SPECIFICATIONS
TOPFLIGHT SPECS
49 Geary Street, Suite 230
San Francisco, CA 94108-5748
P: 415.546.6033

REVISION

NUMBER	DATE	DESCRIPTION

0 10' 20'

ISSUE:
100% DESIGN DEVELOPMENT

DATE:
APRIL 30, 2022

STAMP:

NOT FOR CONSTRUCTION

SHEET TITLE:

PLANTING PLAN

SHEET NUMBER:

L500

IRRIGATION DESIGN NARRATIVE

THE PROPOSED IRRIGATION SYSTEM FOR THIS SITE WILL BE DESIGNED WITH THE LATEST TECHNOLOGY IN WATER CONSERVATION AND EFFICIENCY. THE SYSTEM WILL CONSIST OF THE FOLLOWING TYPES OF IRRIGATION METHODS AND EQUIPMENT COMPLYING WITH THE STATE WATER ORDINANCE. ALL SMALL PLANTING BEDS WILL BE IRRIGATED WITH WATER CONSERVING AND HIGHLY EFFICIENT INLINE DRIP. ALL BIORETENTION AREAS WILL BE IRRIGATED WITH HIGH EFFICIENCY POP-UP PRESSURE COMPENSATING SPRINKLERS OR INLINE DRIP SPACED AT 12" O.C. THESE SPRINKLERS APPLY THE WATER AT A LOWER APPLICATION RATE TO REDUCE RUNOFF AND PONDING. ALL SPRINKLERS WILL INCLUDE BUILT IN CHECK VALVES AND PRESSURE REGULATORS TO PREVENT MISTING AND LOW HEAD DRAINAGE ON SLOPED AREAS. THE CONTROLLER THAT WILL MANAGE THIS SYSTEM USES LOCAL WEATHER TO ADJUST THE RUN TIMES OF THE VALVES BASED ON DAILY WEATHER CONDITIONS. UTILIZING THIS TYPE OF WEATHER-BASED SYSTEM WILL HELP THE LANDSCAPE MANAGER SAVE 25% MORE WATER THAN WITH A CONVENTIONAL CONTROLLER.

IRRIGATION ZONES

1. LOW AND MODERATE WATER-USE SHRUBS/GROUNDCOVER/FLOWERING PLANTS: TO BE IRRIGATED WITH INLINE DRIP
2. LARGE SHRUBS AND TREES: TO BE IRRIGATED USING POINT SOURCE BUBBLERS.
3. STORMWATER TREATMENT: TO BE IRRIGATED WITH HIGH-EFFICIENCY POP-UP PRESSURE COMPENSATING SPRINKLERS
4. LAWN: TO BE IRRIGATED WITH HIGH-EFFICIENCY POP-UP PRESSURE COMPENSATING SPRINKLERS

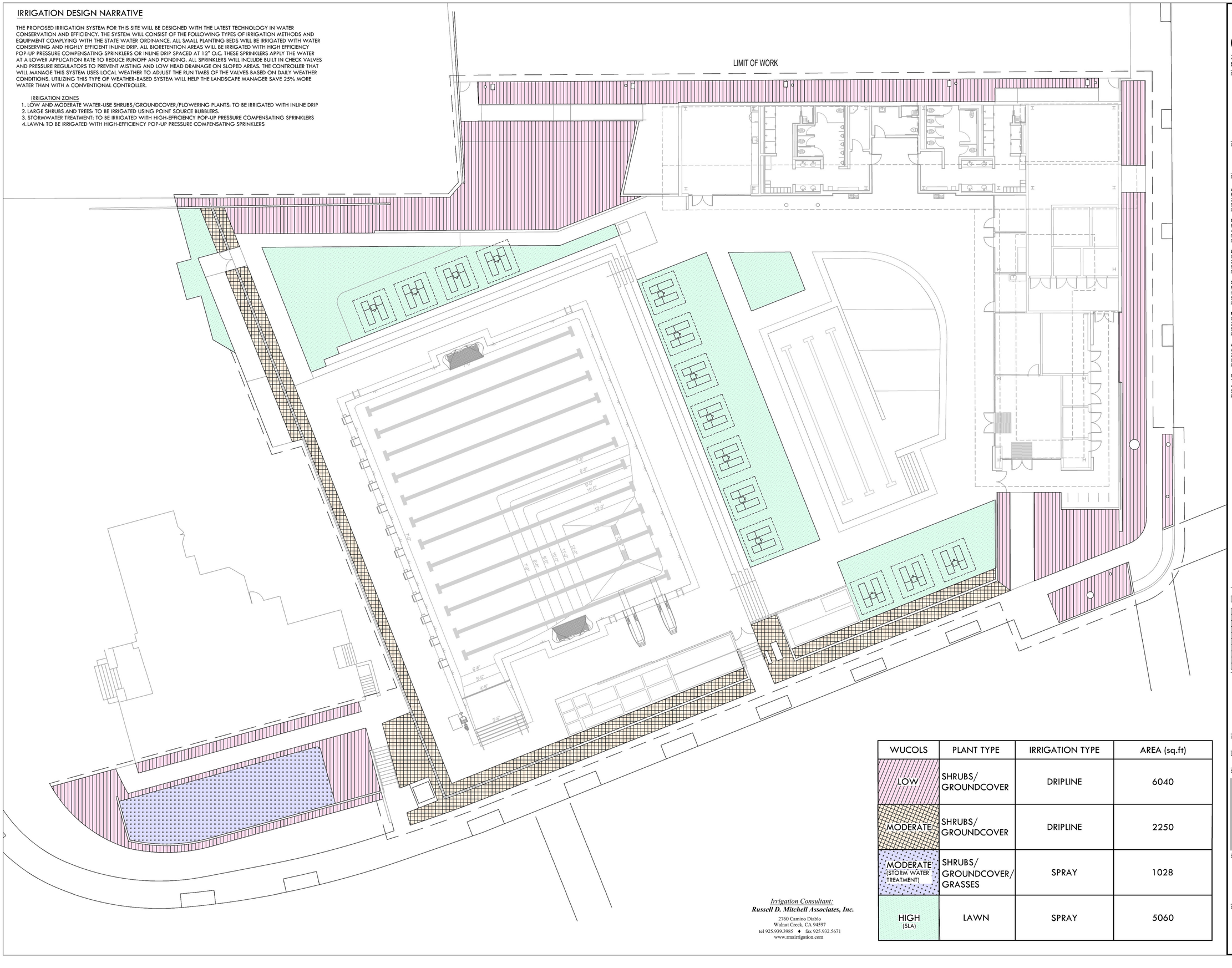

WUCOLS	PLANT TYPE	IRRIGATION TYPE	AREA (sq.ft)
LOW	SHRUBS/ GROUNDCOVER	DRIPLINE	6040
MODERATE	SHRUBS/ GROUNDCOVER	DRIPLINE	2250
MODERATE (STORM WATER TREATMENT)	SHRUBS/ GROUNDCOVER/ GRASSES	SPRAY	1028
HIGH (SLA)	LAWN	SPRAY	5060

Irrigation Consultant:
Russell D. Mitchell Associates, Inc.
2760 Camino Diablo
Walnut Creek, CA 94597
tel 925.939.3985 ♦ fax 925.932.5671
www.rmairrigation.com

els architecture+ urban design
2040 Addison St, Berkeley, CA 94704
510.549.2929 | elsarch.com

PROJECT:

PIEDMONT COMMUNITY POOL
PIEDMONT, CA

CLIENT:
CITY OF PIEDMONT
120 VISTA AVENUE PIEDMONT, CA 94611

PROJECT TEAM:

ARCHITECT:
ELS ARCHITECTURE AND URBAN DESIGN
2040 Addison Street
Berkeley, CA 94704
P: 510.549.2929

CIVIL ENGINEER:
BKF ENGINEERS
4670 Willow Road, Suite 250
Pleasanton, CA 94588
P: (925) 396-7704

LANDSCAPE ARCHITECT:
SWA
2200 Bridgeway
Sausalito, CA 94965
P: 415.332.5100

STRUCTURAL ENGINEER:
FORELL/ELSESSER ENGINEERS, INC.
160 Pine Street, 6th Floor
San Francisco, CA 94111
P: 415.837.0700

MEP / FIRE PROTECTION:
GUTTMANN & BLAEVOET
2351 Powell Street
San Francisco, CA 94133
P: 415.655.4000

AQUATICS:
AQUATICS DESIGN GROUP
2226 Faraday Avenue
Carlsbad, CA 92008
P: 760.438.8400

SPECIFICATIONS
TOPFLIGHT SPECS
49 Geary Street, Suite 230
San Francisco, CA 94108-5748
P: 415.546.6033

REVISION

NUMBER	DATE	DESCRIPTION

0 10' 20'

ISSUE:
100% DESIGN DEVELOPMENT

DATE:
APRIL 30, 2022

STAMP:

NOT FOR CONSTRUCTION

SHEET TITLE:
IRRIGATION PLAN

SHEET NUMBER:
L600

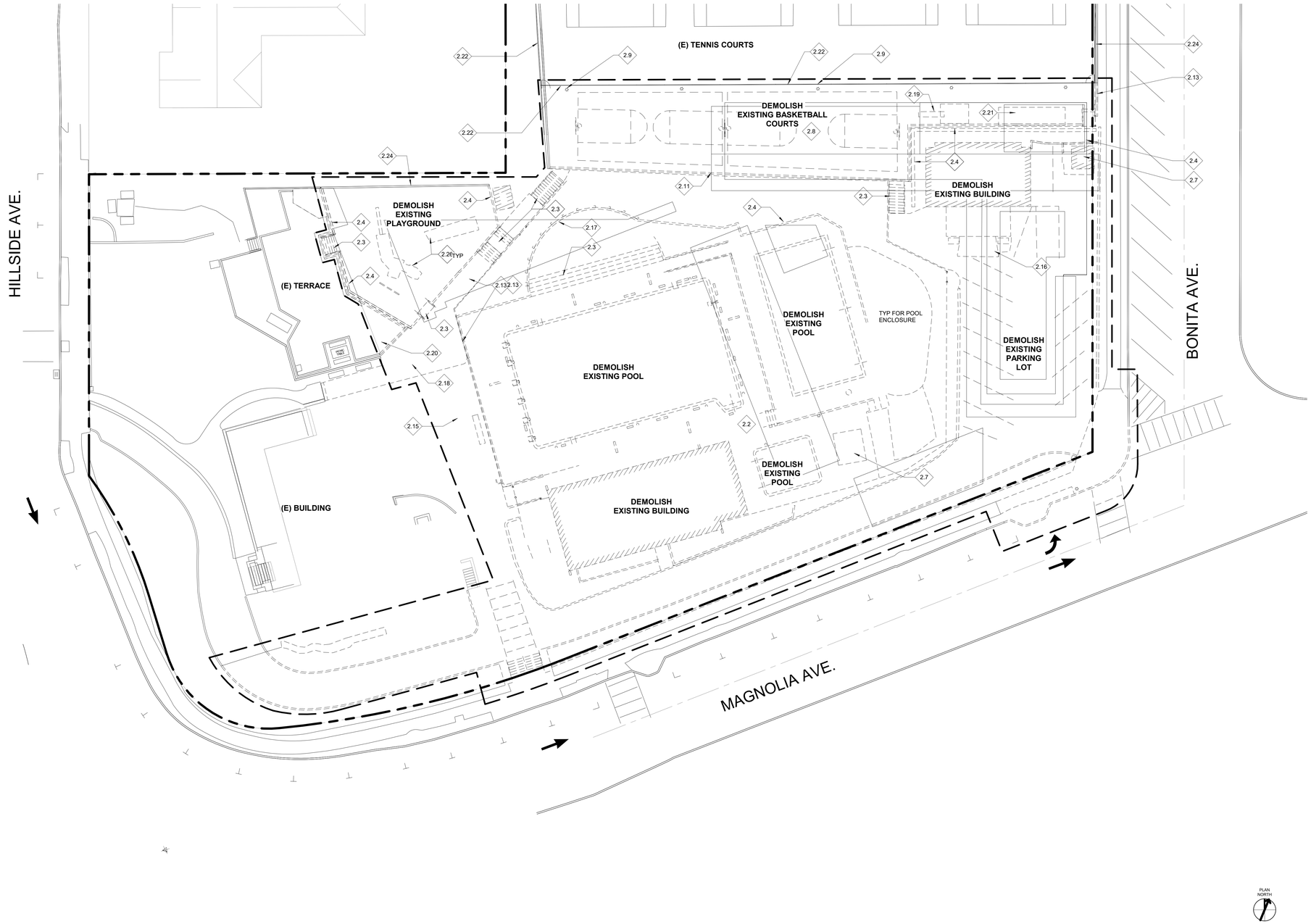

1 DEMOLITION SITE PLAN
1/16" = 1'-0"

GENERAL NOTES

SHEET NOTES

1. ALL EXISTING SITE IMPROVEMENTS WITHIN THE LIMIT OF WORK ARE TO BE REMOVED WHETHER OR NOT EXPLICITLY NOTED.
2. VERIFY CONDITIONS IN FIELD PRIOR TO START OF DEMOLITION & CONSTRUCTION. BRING DISCREPANCIES TO THE ATTENTION OF THE ARCHITECT TO OBTAIN RESOLUTION PRIOR TO PROCEEDING WITH THE WORK.
3. SEE CIVIL, LANDSCAPE, AND SITE ELECTRICAL DRAWINGS FOR ADDITIONAL DEMOLITION INFORMATION.
4. SEE LANDSCAPE DRAWINGS FOR PROTECTION, REMOVAL, AND/OR RELOCATION OF EXISTING TREES.
5. PRESERVE VEGETATION ON EXISTING NEIGHBORING FENCE FOR THE SINGLE-FAMILY RESIDENCE AT THE NORTHWEST PROPERTY BOUNDARY.

KEYNOTES

#	DESCRIPTION
2.2	DEMO EXISTING POOL AND SURROUNDING EXTERIOR POOL DECK
2.3	DEMO EXISTING STAIRS & RAILINGS
2.4	DEMO EXISTING RETAINING WALL
2.7	DEMO EXISTING STORAGE STRUCTURE
2.8	DEMO EXISTING BASKETBALL COURTS AND EQUIPMENT
2.9	REMOVE & SALVAGE EXISTING LIGHT POLE FOR REUSE
2.11	DEMO EXISTING CONCRETE CURB
2.13	DEMO EXISTING FENCE
2.15	DEMO EXISTING CONCRETE PAVING
2.16	DEMO EXISTING CONCRETE PAD
2.17	DEMO EXISTING TRELLIS
2.18	DEMO EXISTING BRICK PAVERS
2.19	DEMO EXISTING BIKE RACKS
2.20	DEMO EXISTING EDGING
2.21	REMOVE & SALVAGE EXISTING BLEACHERS
2.22	EXISTING FENCE TO REMAIN
2.24	EXISTING RETAINING WALL TO REMAIN
2.26	REMOVE & SALVAGE EXISTING PLAY EQUIPMENT

LEGEND

- EXISTING SITE OBJECT TO REMAIN
- DEMO EXISTING SITE OBJECT
- LIMIT OF WORK
- PROPERTY LINE

els architecture+ urban design
2040 Addison St, Berkeley, CA 94704
510.549.2929 | elsarch.com

PROJECT:

PIEDMONT COMMUNITY POOL

777 MAGNOLIA AVENUE PIEDMONT, CA 94611

CLIENT:

CITY OF PIEDMONT

120 VISTA AVENUE PIEDMONT, CA 94611

PROJECT TEAM:

ARCHITECT:
ELS ARCHITECTURE AND URBAN DESIGN
2040 Addison Street
Berkeley, CA 94704
P: 510.549.2929

CIVIL ENGINEER:
BKF ENGINEERS
4670 Willow Road, Suite 250
Pleasanton, CA 94588
P: (925) 396-7704

LANDSCAPE ARCHITECT:
SWA
2200 Bridgeway
Sausalito, CA 94965
P: 415.332.5100

STRUCTURAL ENGINEER:
FORELL/ELSESSER ENGINEERS, INC.
160 Pine Street, 6th Floor
San Francisco, CA 94111
P: 415.837.0700

MEP / FIRE PROTECTION:
GUTTMANN & BLAEVOET
1620 Montgomery Street, Suite 230
San Francisco, CA 94111
P: 415.655.4000

AQUATICS:
AQUATICS DESIGN GROUP
2226 Faraday Avenue
Carlsbad, CA 92008
P: 760.438.8400

SPECIFICATIONS
TOPFLIGHT SPECS
49 Geary Street, Suite 230
San Francisco, CA 94108-5748
P: 415.546.6033

REVISION

NUMBER	DATE	DESCRIPTION

ISSUE:
100% DESIGN DEVELOPMENT

DATE:
APRIL 30, 2022

STAMP:

NOT FOR CONSTRUCTION

SHEET TITLE:
DEMOLITION SITE PLAN

SHEET NUMBER:
A100

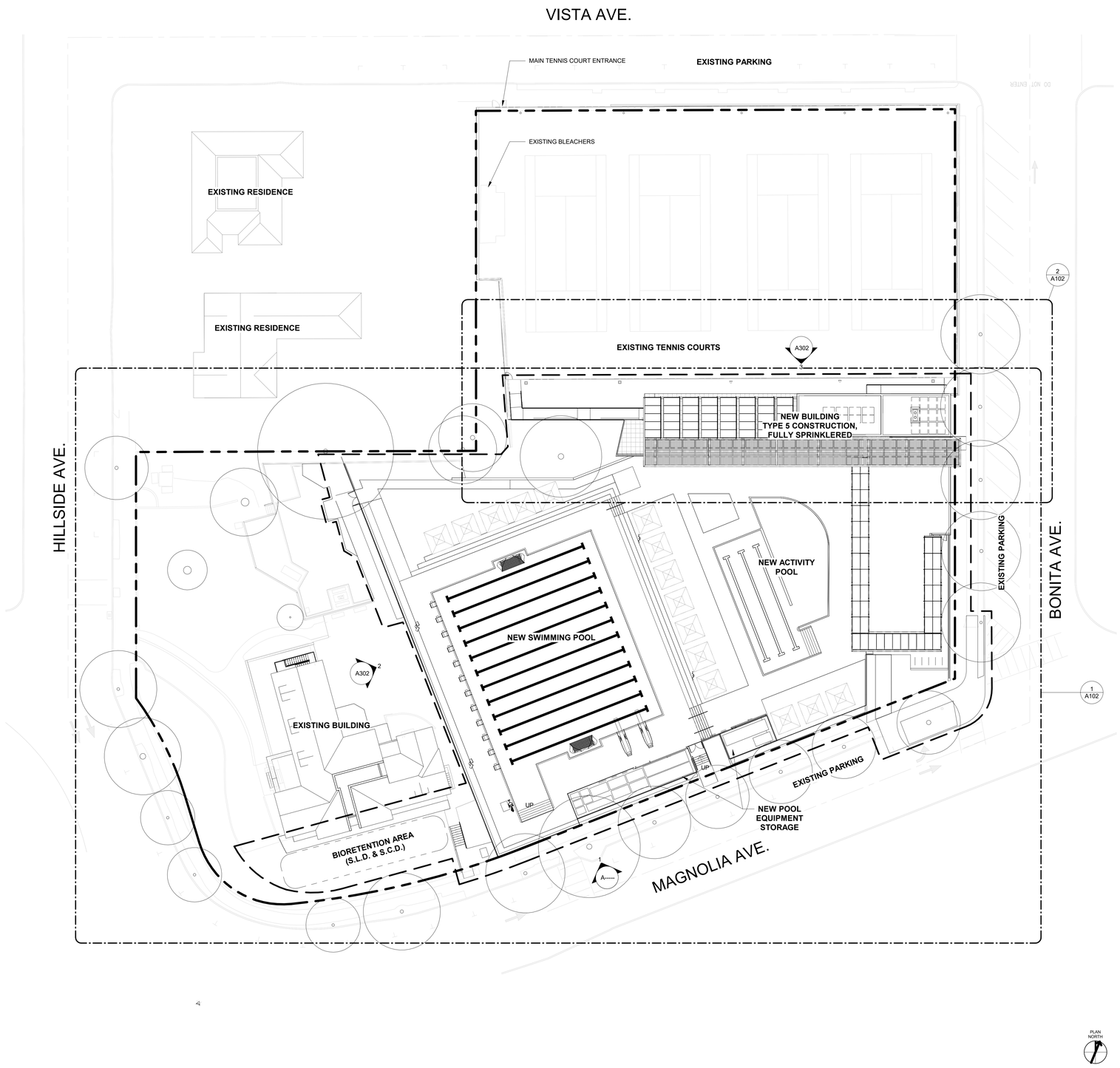

1 PROPOSED OVERALL SITE PLAN
1" = 20'-0"

GENERAL NOTES

1. FFE: +0' - 0" = +297.00
2. ALL EXPOSED C.I.P. CONC. TO RECEIVE WATERPROOF & ANTI-GRAFFITI COATING.
3. AUTOMATIC FIRE SPRINKLER SYSTEM THROUGHOUT BUILDING. SPRINKLERS SHALL BE DESIGNED TO COORDINATE WITH DUCTS, PIPING, CONDUIT, LIGHTING, ACCESS PANEL LOCATIONS AND OTHER CEILING ELEMENTS FOR A CLEAN, ARCHITECTURAL APPEARANCE.

SHEET NOTES

1. SEE LANDSCAPE, CIVIL, AND SITE ELECTRICAL FOR MORE INFORMATION.
2. SEE AQUATIC DRAWINGS FOR POOL & POOL DECK PLANS.

KEYNOTES

LEGEND

- EXISTING SITE OBJECT TO REMAIN
- DEMO EXISTING SITE OBJECT
- LIMIT OF WORK
- PROPERTY LINE

els architecture+ urban design
2040 Addison St, Berkeley, CA 94704
510.549.2929 | elsarch.com

PROJECT:

PIEDMONT COMMUNITY POOL

777 MAGNOLIA AVENUE PIEDMONT, CA 94611

CLIENT:

CITY OF PIEDMONT

120 VISTA AVENUE PIEDMONT, CA 94611

PROJECT TEAM:

ARCHITECT:
ELS ARCHITECTURE AND URBAN DESIGN
2040 Addison Street
Berkeley, CA 94704
P: 510.549.2929

CIVIL ENGINEER:
BKF ENGINEERS
4670 Willow Road, Suite 250
Pleasanton, CA 94588
P: (925) 396-7704

LANDSCAPE ARCHITECT:
SWA
2200 Bridgeway
Sausalito, CA 94965
P: 415.332.5100

STRUCTURAL ENGINEER:
FORELL/ELSESSER ENGINEERS, INC.
160 Pine Street, 6th Floor
San Francisco, CA 94111
P: 415.837.0700

MEP / FIRE PROTECTION:
GUTTMANN & BLAEVOET
1620 Montgomery Street, Suite 230
San Francisco, CA 94111
P: 415.655.4000

AQUATICS:
AQUATICS DESIGN GROUP
2226 Faraday Avenue
Carlsbad, CA 92008
P: 760.438.8400

SPECIFICATIONS
TOPFLIGHT SPECS
49 Geary Street, Suite 230
San Francisco, CA 94108-5748
P: 415.546.6033

REVISION

NUMBER	DATE	DESCRIPTION

ISSUE:
100% DESIGN DEVELOPMENT

DATE:
APRIL 30, 2022

STAMP:

NOT FOR CONSTRUCTION

SHEET TITLE:
PROPOSED OVERALL SITE PLAN

SHEET NUMBER:
A101

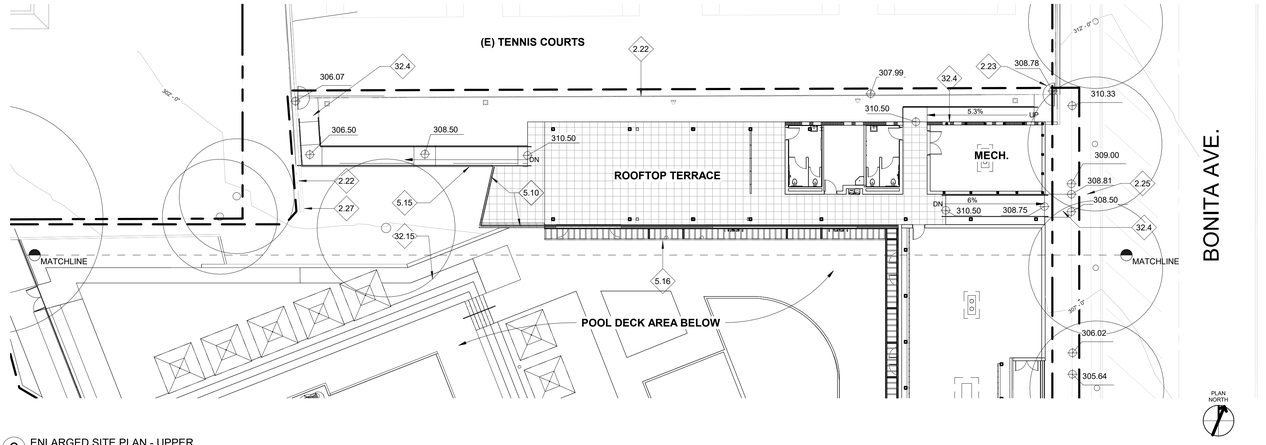

2 ENLARGED SITE PLAN - UPPER
1/16" = 1'-0"

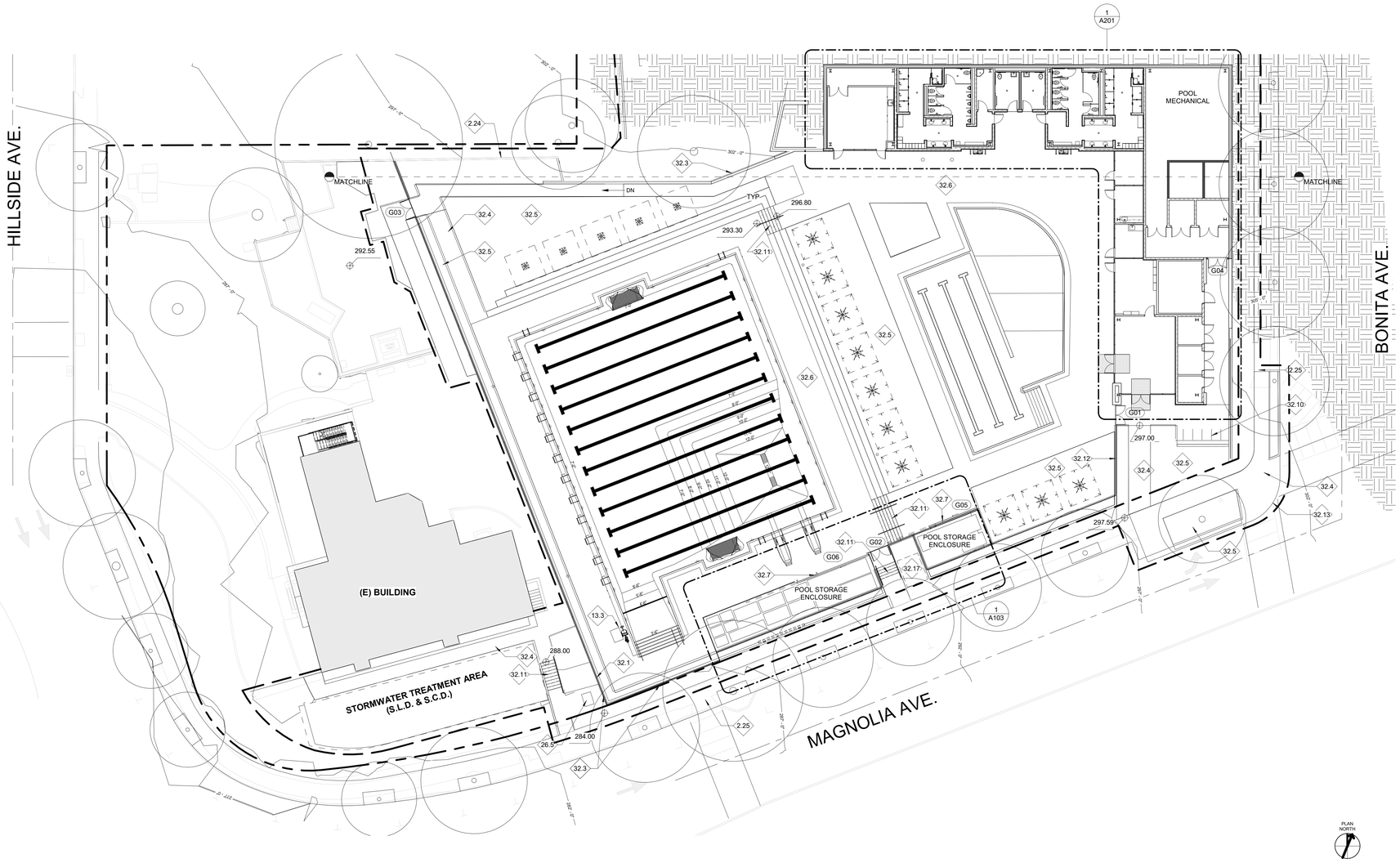

1 ENLARGED SITE PLAN - LOWER
1/16" = 1'-0"

GENERAL NOTES

1. FFE: +0' - 0" = +297.00
2. ALL EXPOSED C.I.P. CONC. TO RECEIVE WATERPROOF & ANTI-GRAFFITI COATING.
3. AUTOMATIC FIRE SPRINKLER SYSTEM THROUGHOUT BUILDING. SPRINKLERS SHALL BE DESIGNED TO COORDINATE WITH DUCTS, PIPING, CONDUIT, LIGHTING, ACCESS PANEL LOCATIONS AND OTHER CEILING ELEMENTS FOR A CLEAN, ARCHITECTURAL APPEARANCE.

SHEET NOTES

1. SEE LANDSCAPE, CIVIL, AND SITE ELECTRICAL FOR MORE INFORMATION.
2. SEE AQUATIC DRAWINGS FOR POOL & POOL DECK PLANS.

KEYNOTES

#	DESCRIPTION
2.22	EXISTING FENCE TO REMAIN
2.23	EXISTING GATE TO REMAIN
2.24	EXISTING RETAINING WALL TO REMAIN
2.25	EXISTING SIDEWALK TO REMAIN
2.27	EXISTING CONCRETE CURB TO REMAIN
5.10	METAL GUARDRAIL, PAINTED
5.15	METAL FENCE TO MATCH TERRACE GUARDRAIL
5.16	METAL TRELLIS BELOW
13.3	ACCESSIBLE POOL LIFT, SEE AQUATIC DRAWINGS
26.5	TRANSFORMER, S.E.D.
32.1	FENCING, VINYL COATED CHAIN LINK
32.3	CAST-IN-PLACE CONCRETE RETAINING WALL, S.S.D.
32.4	SITE PAVING, S.L.D.
32.5	SITE PLANTING, S.L.D.
32.6	C.I.P. INTEGRAL COLOR CONCRETE POOL DECK
32.7	CANTILEVERED SLIDING GATE, VINYL COATED CHAIN LINK INFILL
32.10	BICYCLE RACKS, S.L.D.
32.11	CAST-IN-PLACE CONCRETE STEPS, S.L.D.
32.12	GLASS FENCE
32.13	C.I.P. CONCRETE CURB & GUTTER, S.C.D.
32.15	C.I.P. CONCRETE RAMP
32.17	AREA FOR BACKFLOW PREVENTERS, S.C.D.

LEGEND

- EXISTING SITE OBJECT TO REMAIN
- DEMO EXISTING SITE OBJECT
- LIMIT OF WORK
- PROPERTY LINE

els architecture+ urban design
2040 Addison St, Berkeley, CA 94704
510.549.2929 | elsarch.com

PROJECT:

PIEDMONT COMMUNITY POOL

777 MAGNOLIA AVENUE PIEDMONT, CA 94611

CLIENT:

CITY OF PIEDMONT

120 VISTA AVENUE PIEDMONT, CA 94611

PROJECT TEAM:

ARCHITECT:
ELS ARCHITECTURE AND URBAN DESIGN
2040 Addison Street
Berkeley, CA 94704
P: 510.549.2929

CIVIL ENGINEER:
BKF ENGINEERS
4670 Willow Road, Suite 250
Pleasanton, CA 94588
P: (925) 396-7704

LANDSCAPE ARCHITECT:
SWA
2200 Bridgeway
Sausalito, CA 94965
P: 415.332.5100

STRUCTURAL ENGINEER:
FORELL/ELSESSER ENGINEERS, INC.
160 Pine Street, 6th Floor
San Francisco, CA 94111
P: 415.837.0700

MEP / FIRE PROTECTION:
GUTTMANN & BLAEVOET
1620 Montgomery Street, Suite 230
San Francisco, CA 94111
P: 415.655.4000

AQUATICS:
AQUATICS DESIGN GROUP
2226 Faraday Avenue
Carlsbad, CA 92008
P: 760.438.8400

SPECIFICATIONS
TOPFLIGHT SPECS
49 Geary Street, Suite 230
San Francisco, CA 94108-5748
P: 415.546.6033

REVISION

NUMBER	DATE	DESCRIPTION

ISSUE:
100% DESIGN DEVELOPMENT

DATE:
APRIL 30, 2022

STAMP:

NOT FOR CONSTRUCTION

SHEET TITLE:
SITE PLANS - UPPER & LOWER

SHEET NUMBER:
A102

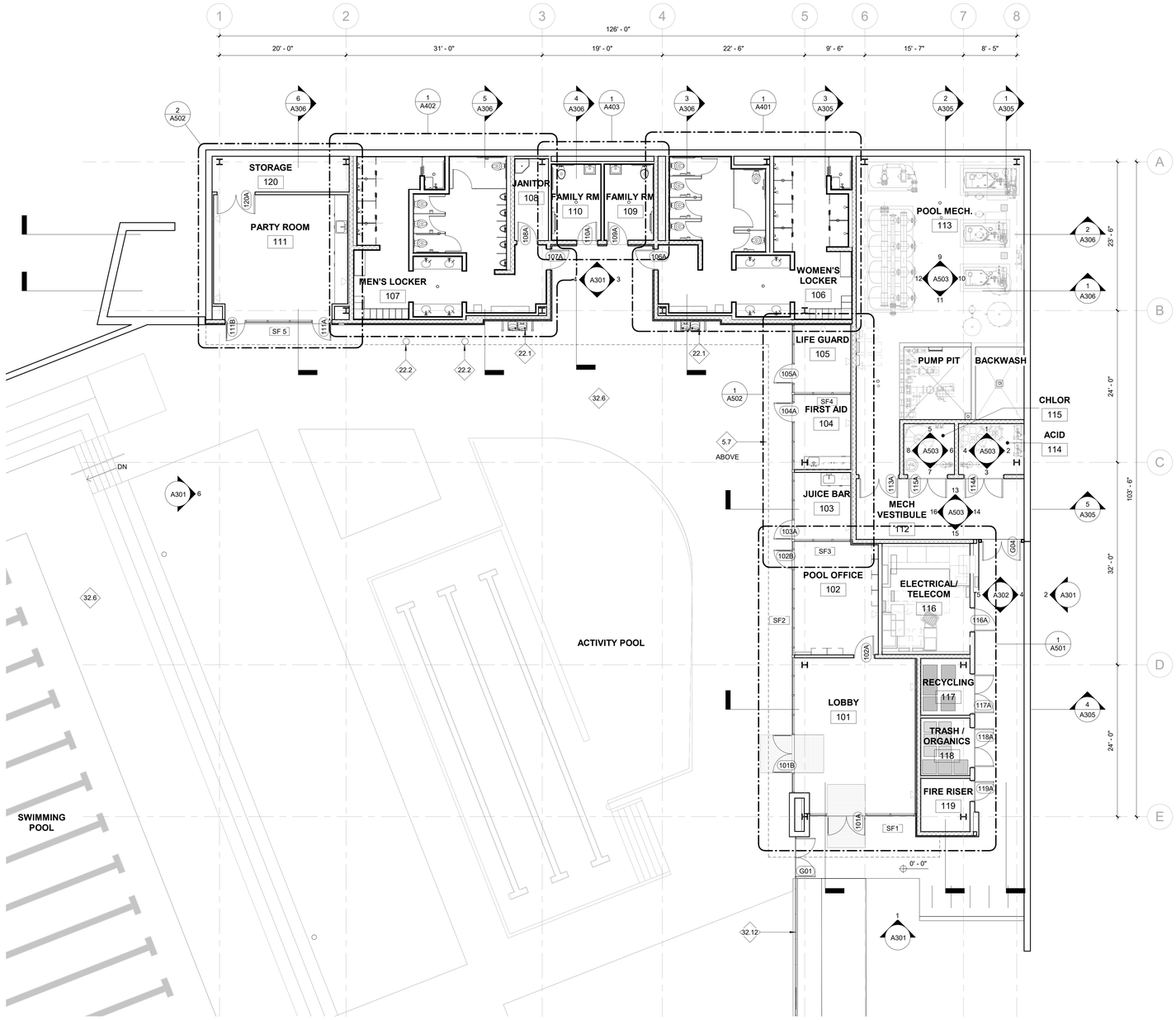

1 FLOOR PLAN LEVEL 1
1/8" = 1'-0"

PLAN NORTH

LEGEND

	METAL STUD FRAMING
	CMU WALL
101	DOOR / GATE NUMBER
SF#	STOREFRONT KEY

KEYNOTES

#	DESCRIPTION
5.7	METAL TRELLIS, PAINTED
22.1	DUAL HEIGHT DRINKING FOUNTAIN W/ BOTTLE FILLER, S.P.D.
22.2	OUTDOOR RINSE SHOWER WITH 2 SHOWER HEADS AND HOT WATER, S.P.D.
32.6	C.I.P. INTEGRAL COLOR CONCRETE POOL DECK
32.12	GLASS FENCE

GENERAL NOTES

1. FFE: +0' - 0" = +297.00
2. ALL EXPOSED C.I.P. CONC. TO RECEIVE WATERPROOF & ANTI-GRAFFITI COATING.
3. AUTOMATIC FIRE SPRINKLER SYSTEM THROUGHOUT BUILDING. SPRINKLERS SHALL BE DESIGNED TO COORDINATE WITH DUCTS, PIPING, CONDUIT, LIGHTING, ACCESS PANEL LOCATIONS AND OTHER CEILING ELEMENTS FOR A CLEAN, ARCHITECTURAL APPEARANCE.

els architecture+ urban design
2040 Addison St, Berkeley, CA 94704
510.549.2929 | elsarch.com

PROJECT:

PIEDMONT COMMUNITY POOL
777 MAGNOLIA AVENUE
PIEDMONT, CA 94611

CLIENT:

CITY OF PIEDMONT
120 VISTA AVENUE PIEDMONT, CA 94611

PROJECT TEAM:

ARCHITECT:
ELS ARCHITECTURE AND URBAN DESIGN
2040 Addison Street
Berkeley, CA 94704
P: 510.549.2929

CIVIL ENGINEER:
BKF ENGINEERS
4670 Willow Road, Suite 250
Pleasanton, CA 94588
P: (925) 396-7704

LANDSCAPE ARCHITECT:
SWA
2200 Bridgeway
Sausalito, CA 94965
P: 415.332.5100

STRUCTURAL ENGINEER:
FORELL/ELSESSER ENGINEERS, INC.
160 Pine Street, 6th Floor
San Francisco, CA 94111
P: 415.837.0700

MEP / FIRE PROTECTION:
GUTTMANN & BLAEVOET
1620 Montgomery Street, Suite 230
San Francisco, CA 94111
P: 415.655.4000

AQUATICS:
AQUATICS DESIGN GROUP
2226 Faraday Avenue
Carlsbad, CA 92008
P: 760.438.8400

SPECIFICATIONS
TOPFLIGHT SPECS
49 Geary Street, Suite 230
San Francisco, CA 94108-5748
P: 415.546.6033

REVISION

NUMBER	DATE	DESCRIPTION

ISSUE:
100% DESIGN DEVELOPMENT

DATE:
APRIL 30, 2022

STAMP:

NOT FOR CONSTRUCTION

SHEET TITLE:
FLOOR PLAN LEVEL 1

SHEET NUMBER:
A201

NOTE: SEE POOL DRAWINGS FOR DIMENSIONS AND LAYOUT OF PUMP PIT, SURGE CHAMBER AND BACKWASH PIT

1 SLAB PLAN LEVEL 1
1/8" = 1'-0"

LEGEND

- RAISED CONCRETE CURB OR PAD. +297.50 U.O.N.
- STRUCTURAL CONCRETE SLAB +297.00 U.O.N.
- DEPRESSED CONCRETE SLAB
- STEPPED CONCRETE
- FD+ 00.00' FLOOR DRAIN ELEVATION
- RD+ 00.00' ROOF DRAIN ELEVATION
- + 00.00' SLAB OR CURB ELEVATION
- CMU WALL FOR REFERENCE

KEYNOTES

GENERAL NOTES

1. FFE: +0' - 0" = +297.00
2. ALL EXPOSED C.I.P. CONC. TO RECEIVE WATERPROOF & ANTI-GRAFFITI COATING.
3. AUTOMATIC FIRE SPRINKLER SYSTEM THROUGHOUT BUILDING. SPRINKLERS SHALL BE DESIGNED TO COORDINATE WITH DUCTS, PIPING, CONDUIT, LIGHTING, ACCESS PANEL LOCATIONS AND OTHER CEILING ELEMENTS FOR A CLEAN, ARCHITECTURAL APPEARANCE.

els architecture+ urban design
2040 Addison St, Berkeley, CA 94704
510.549.2929 | elsarch.com

PROJECT:

PIEDMONT COMMUNITY POOL
777 MAGNOLIA AVENUE
PIEDMONT, CA 94611

CLIENT:

CITY OF PIEDMONT
120 VISTA AVENUE PIEDMONT, CA 94611

PROJECT TEAM:

ARCHITECT:
ELS ARCHITECTURE AND URBAN DESIGN
2040 Addison Street
Berkeley, CA 94704
P: 510.549.2929

CIVIL ENGINEER:
BKF ENGINEERS
4670 Willow Road, Suite 250
Pleasanton, CA 94588
P: (925) 396-7704

LANDSCAPE ARCHITECT:
SWA
2200 Bridgeway
Sausalito, CA 94965
P: 415.332.5100

STRUCTURAL ENGINEER:
FORELL/ELSESSER ENGINEERS, INC.
160 Pine Street, 6th Floor
San Francisco, CA 94111
P: 415.837.0700

MEP / FIRE PROTECTION:
GUTTMANN & BLAEVOET
1620 Montgomery Street, Suite 230
San Francisco, CA 94111
P: 415.655.4000

AQUATICS:
AQUATICS DESIGN GROUP
2226 Faraday Avenue
Carlsbad, CA 92008
P: 760.438.8400

SPECIFICATIONS
TOPFLIGHT SPECS
49 Geary Street, Suite 230
San Francisco, CA 94108-5748
P: 415.546.6033

REVISION

NUMBER	DATE	DESCRIPTION

ISSUE:
100% DESIGN DEVELOPMENT

DATE:
APRIL 30, 2022

STAMP:

NOT FOR CONSTRUCTION

SHEET TITLE:
SLAB PLAN LEVEL 1

SHEET NUMBER:
A202

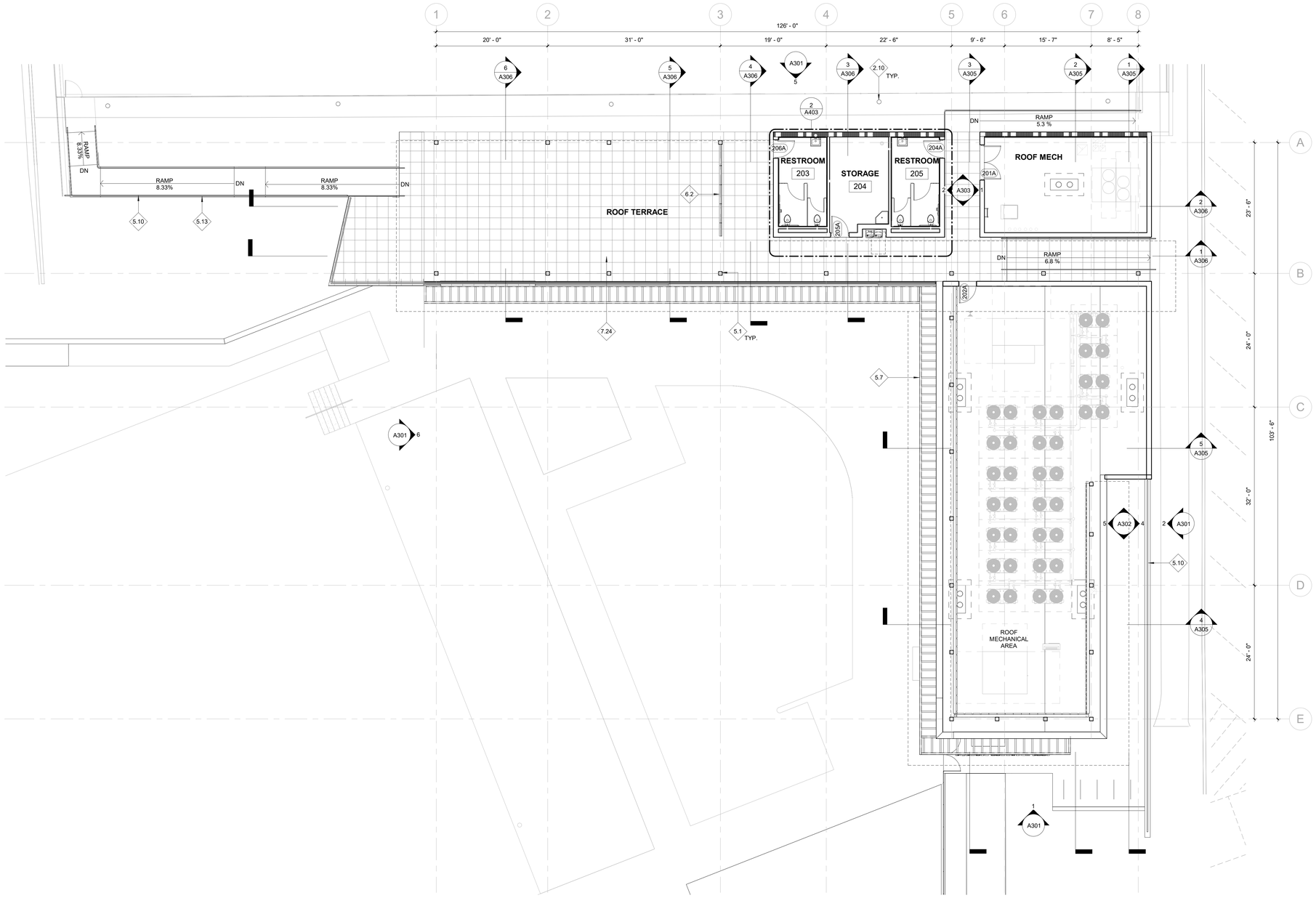

1 ROOF / TERRACE PLAN
1/8" = 1'-0"

LEGEND

	METAL STUD FRAMING
	CMU WALL
101	DOOR / GATE NUMBER
SF#	STOREFRONT KEY

KEYNOTES

#	DESCRIPTION
2.10	EXISTING RELOCATED LIGHT POLE
5.1	STRUCTURE, S.S.D., PAINTED
5.7	METAL TRELLIS, PAINTED
5.10	METAL GUARDRAIL, PAINTED
5.13	METAL HANDRAIL, PAINTED
6.2	COMPOSITE WOOD SLAT SYSTEM
7.24	ROOF PAVERS ON ADJUSTABLE PEDESTALS

GENERAL NOTES

1. FFE: +0' - 0" = +297.00
2. ALL EXPOSED C.I.P. CONC. TO RECEIVE WATERPROOF & ANTI-GRAFFITI COATING.
3. AUTOMATIC FIRE SPRINKLER SYSTEM THROUGHOUT BUILDING. SPRINKLERS SHALL BE DESIGNED TO COORDINATE WITH DUCTS, PIPING, CONDUIT, LIGHTING, ACCESS PANEL LOCATIONS AND OTHER CEILING ELEMENTS FOR A CLEAN, ARCHITECTURAL APPEARANCE.

els architecture+ urban design
2040 Addison St, Berkeley, CA 94704
510.549.2929 | elsarch.com

PROJECT:

PIEDMONT COMMUNITY POOL
777 MAGNOLIA AVENUE
PIEDMONT, CA 94611

CLIENT:
CITY OF PIEDMONT
120 VISTA AVENUE PIEDMONT, CA 94611

PROJECT TEAM:

ARCHITECT:
ELS ARCHITECTURE AND URBAN DESIGN
2040 Addison Street
Berkeley, CA 94704
P: 510.549.2929

CIVIL ENGINEER:
BKF ENGINEERS
4670 Willow Road, Suite 250
Pleasanton, CA 94588
P: (925) 396-7704

LANDSCAPE ARCHITECT:
SWA
2200 Bridgeway
Sausalito, CA 94965
P: 415.332.5100

STRUCTURAL ENGINEER:
FORELL/ELSESSER ENGINEERS, INC.
160 Pine Street, 6th Floor
San Francisco, CA 94111
P: 415.837.0700

MEP / FIRE PROTECTION:
GUTTMANN & BLAEVOET
1620 Montgomery Street, Suite 230
San Francisco, CA 94111
P: 415.655.4000

AQUATICS:
AQUATICS DESIGN GROUP
2226 Faraday Avenue
Carlsbad, CA 92008
P: 760.438.8400

SPECIFICATIONS
TOPFLIGHT SPECS
49 Geary Street, Suite 230
San Francisco, CA 94108-5748
P: 415.546.6033

REVISION

NUMBER	DATE	DESCRIPTION

ISSUE:
100% DESIGN DEVELOPMENT

DATE:
APRIL 30, 2022

STAMP:
NOT FOR CONSTRUCTION

SHEET TITLE:
LEVEL 2 & LOW ROOF PLAN

SHEET NUMBER:
A205

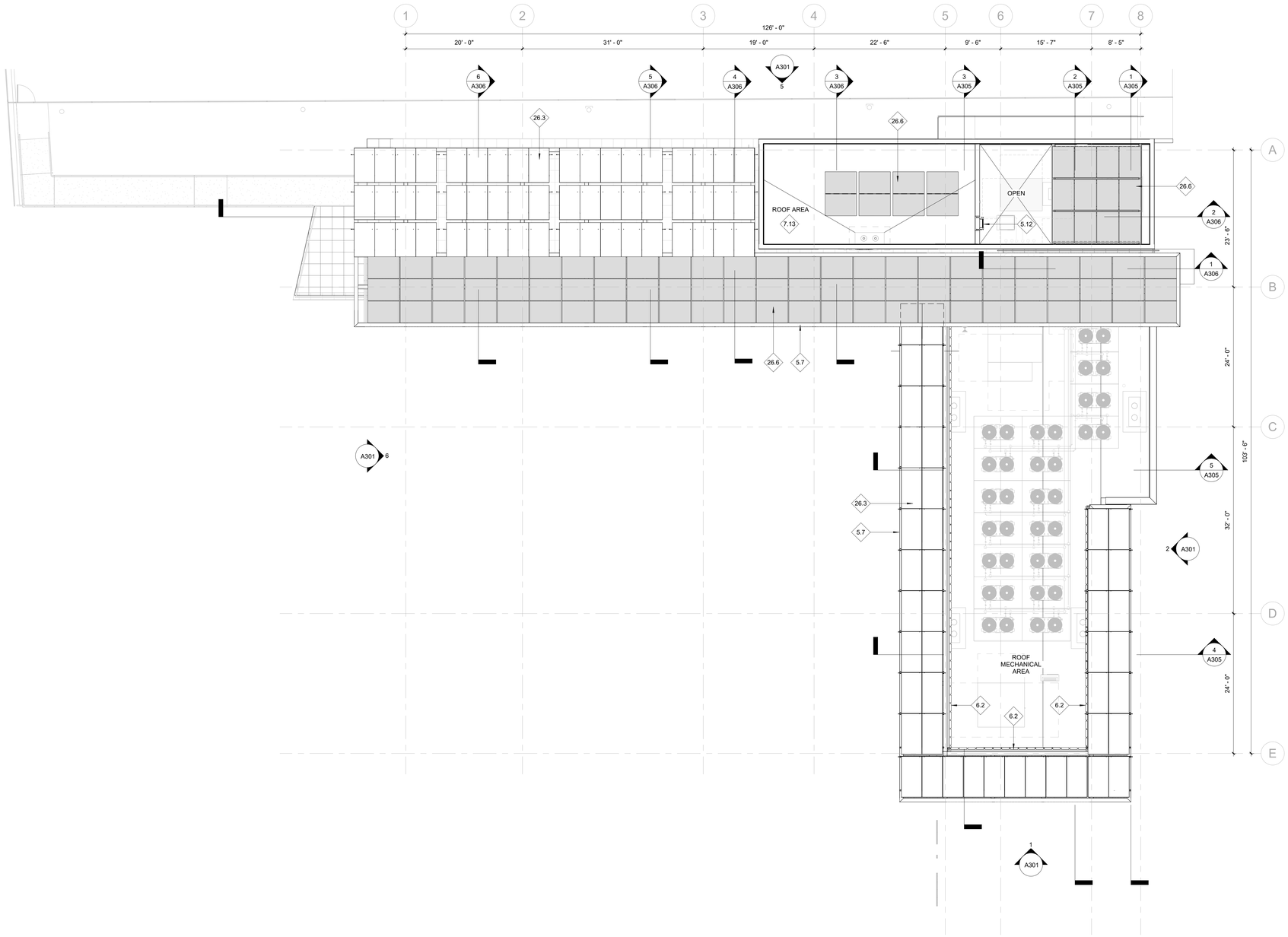

1 HIGH ROOF PLAN
1/8" = 1'-0"

ROOF LEGEND

PV PANEL

PVT PANEL

KEYNOTES

#	DESCRIPTION
5.7	METAL TRELLIS, PAINTED
5.12	PREMANUFACTURED METAL SHIP LADDER, PAINTED
6.2	COMPOSITE WOOD SLAT SYSTEM
7.13	PVC THERMOPLASTIC ROOF MEMBRANE
26.3	PHOTOVOLTAIC SYSTEM, S.E.D.
26.6	PHOTOVOLTAIC THERMAL SYSTEM, S.E.D.

GENERAL NOTES

1. FFE: +0' - 0" = +297.00
2. ALL EXPOSED C.I.P. CONC. TO RECEIVE WATERPROOF & ANTI-GRAFFITI COATING.
3. AUTOMATIC FIRE SPRINKLER SYSTEM THROUGHOUT BUILDING. SPRINKLERS SHALL BE DESIGNED TO COORDINATE WITH DUCTS, PIPING, CONDUIT, LIGHTING, ACCESS PANEL LOCATIONS AND OTHER CEILING ELEMENTS FOR A CLEAN, ARCHITECTURAL APPEARANCE.

els architecture+ urban design
2040 Addison St, Berkeley, CA 94704
510.549.2929 | elsarch.com

PROJECT:

PIEDMONT COMMUNITY POOL
777 MAGNOLIA AVENUE
PIEDMONT, CA 94611

CLIENT:

CITY OF PIEDMONT
120 VISTA AVENUE PIEDMONT, CA 94611

PROJECT TEAM:

ARCHITECT:
ELS ARCHITECTURE AND URBAN DESIGN
2040 Addison Street
Berkeley, CA 94704
P: 510.549.2929

CIVIL ENGINEER:
BKF ENGINEERS
4670 Willow Road, Suite 250
Pleasanton, CA 94588
P: (925) 396-7704

LANDSCAPE ARCHITECT:
SWA
2200 Bridgeway
Sausalito, CA 94965
P: 415.332.5100

STRUCTURAL ENGINEER:
FORELL/ELSESSER ENGINEERS, INC.
160 Pine Street, 6th Floor
San Francisco, CA 94111
P: 415.837.0700

MEP / FIRE PROTECTION:
GUTTMANN & BLAEVOET
1620 Montgomery Street, Suite 230
San Francisco, CA 94111
P: 415.655.4000

AQUATICS:
AQUATICS DESIGN GROUP
2226 Faraday Avenue
Carlsbad, CA 92008
P: 760.438.8400

SPECIFICATIONS
TOPFLIGHT SPECS
49 Geary Street, Suite 230
San Francisco, CA 94108-5748
P: 415.546.6033

REVISION

NUMBER	DATE	DESCRIPTION

ISSUE:
100% DESIGN DEVELOPMENT

DATE:
APRIL 30, 2022

STAMP:

NOT FOR CONSTRUCTION

SHEET TITLE:
HIGH ROOF PLAN

SHEET NUMBER:
A207

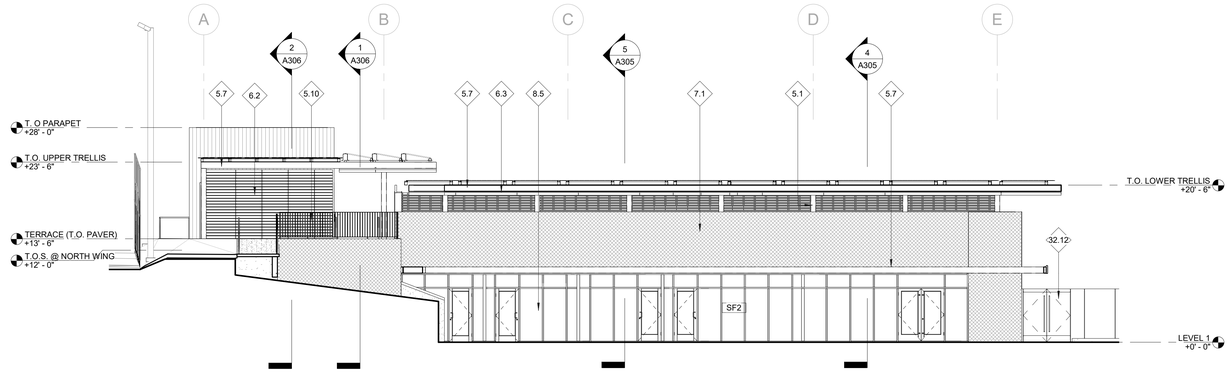

6 EXTERIOR ELEVATION - WEST
1/8" = 1'-0"

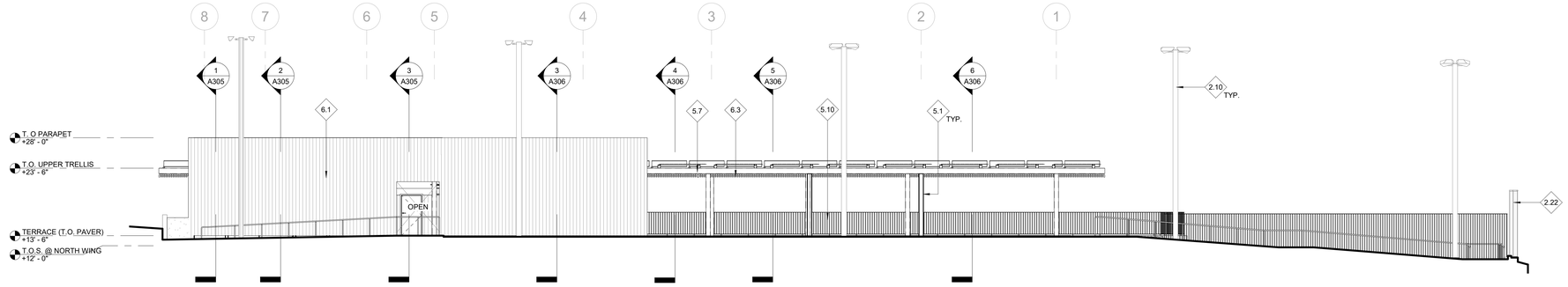

5 EXTERIOR ELEVATION - NORTH
1/8" = 1'-0"

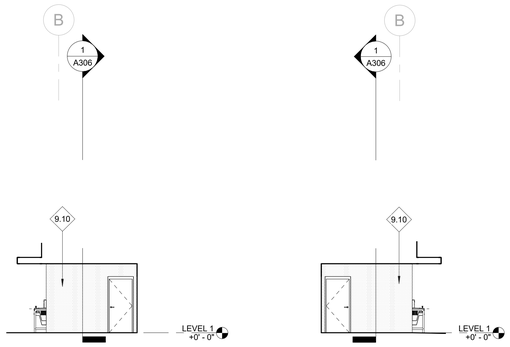

4 EX. ELEV. @ LOCKER ROOM ALCOVE - WEST
1/8" = 1'-0"

3 EX. ELEV. @ LOCKER ROOM ALCOVE - EAST
1/8" = 1'-0"

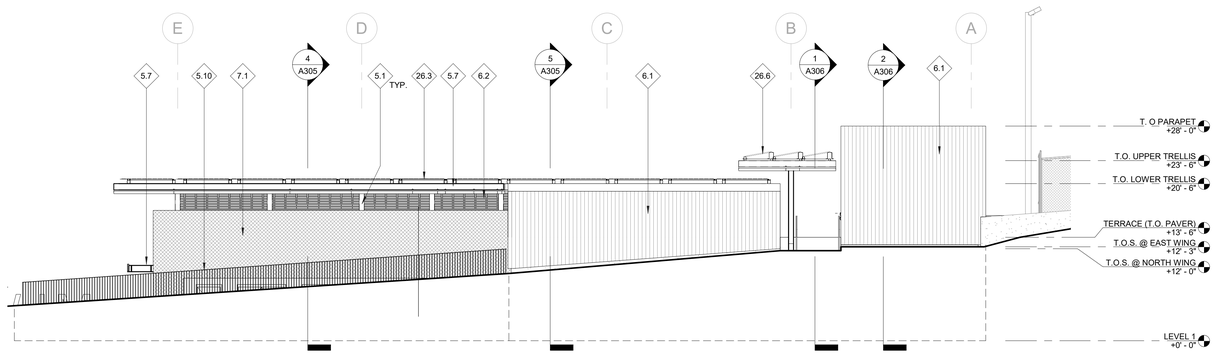

2 EXTERIOR ELEVATION - EAST
1/8" = 1'-0"

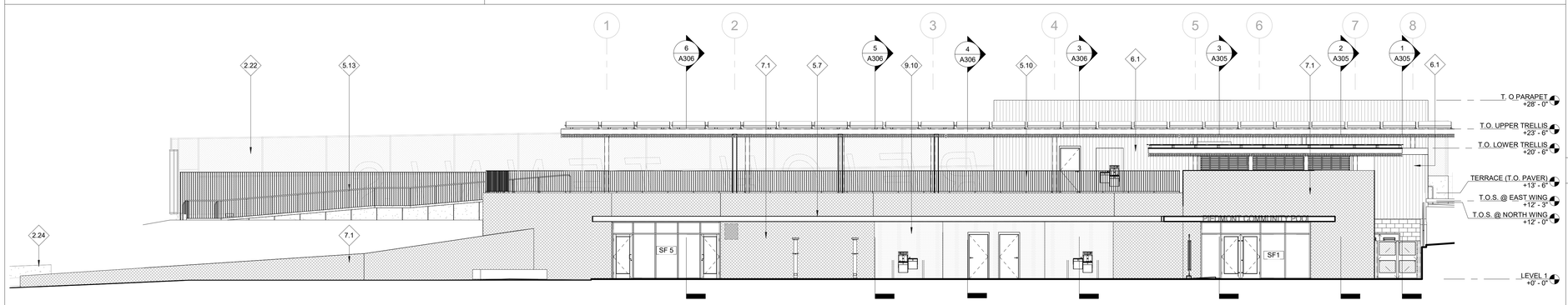

1 EXTERIOR ELEVATION - SOUTH
1/8" = 1'-0"

GENERAL NOTES

1. FFE: +0' - 0" = +297.00
2. ALL EXPOSED C.I.P. CONC. TO RECEIVE WATERPROOF & ANTI-GRAFFITI COATING.
3. AUTOMATIC FIRE SPRINKLER SYSTEM THROUGHOUT BUILDING. SPRINKLERS SHALL BE DESIGNED TO COORDINATE WITH DUCTS, PIPING, CONDUIT, LIGHTING, ACCESS PANEL LOCATIONS AND OTHER CEILING ELEMENTS FOR A CLEAN, ARCHITECTURAL APPEARANCE.

SHEET NOTES

KEYNOTES

#	DESCRIPTION
2.10	EXISTING RELOCATED LIGHT POLE
2.22	EXISTING FENCE TO REMAIN
2.24	EXISTING RETAINING WALL TO REMAIN
5.1	STRUCTURE, S.S.D., PAINTED
5.7	METAL TRELLIS, PAINTED
5.10	METAL GUARDRAIL, PAINTED
5.13	METAL HANDRAIL, PAINTED
6.1	COMPOSITE WOOD SIDING
6.2	COMPOSITE WOOD SLAT SYSTEM
6.3	COMPOSITE WOOD SLAT CEILING / SOFFIT CLADDING
7.1	SLATE SHINGLE CLADDING
8.5	ALUMINUM FRAMED STOREFRONT SYSTEM
9.10	CEMENT PLASTER, PAINTED
26.3	PHOTOVOLTAIC SYSTEM, S.E.D.
26.6	PHOTOVOLTAIC THERMAL SYSTEM, S.E.D.
32.12	GLASS FENCE

LEGEND

SF #	STOREFRONT KEY

els architecture+ urban design
2040 Addison St, Berkeley, CA 94704
510.549.2929 | elsarch.com

PROJECT:

PIEDMONT COMMUNITY POOL

777 MAGNOLIA AVENUE PIEDMONT, CA 94611

CLIENT:

CITY OF PIEDMONT

120 VISTA AVENUE PIEDMONT, CA 94611

PROJECT TEAM:

ARCHITECT:
ELS ARCHITECTURE AND URBAN DESIGN
2040 Addison Street
Berkeley, CA 94704
P: 510.549.2929

CIVIL ENGINEER:
BKF ENGINEERS
4670 Willow Road, Suite 250
Pleasanton, CA 94588
P: (925) 396-7704

LANDSCAPE ARCHITECT:
SWA
2200 Bridgeway
Sausalito, CA 94965
P: 415.332.5100

STRUCTURAL ENGINEER:
FORELL/ELSESSER ENGINEERS, INC.
160 Pine Street, 6th Floor
San Francisco, CA 94111
P: 415.837.0700

MEP / FIRE PROTECTION:
GUTTMANN & BLAEVOET
1620 Montgomery Street, Suite 230
San Francisco, CA 94111
P: 415.655.4000

AQUATICS:
AQUATICS DESIGN GROUP
2226 Faraday Avenue
Carlsbad, CA 92008
P: 760.438.8400

SPECIFICATIONS
TOPFLIGHT SPECS
49 Geary Street, Suite 230
San Francisco, CA 94108-5748
P: 415.546.6033

REVISION

NUMBER	DATE	DESCRIPTION

ISSUE:
100% DESIGN DEVELOPMENT

DATE:
APRIL 30, 2022

STAMP:

NOT FOR CONSTRUCTION

SHEET TITLE:

EXTERIOR ELEVATIONS

SHEET NUMBER:

A301

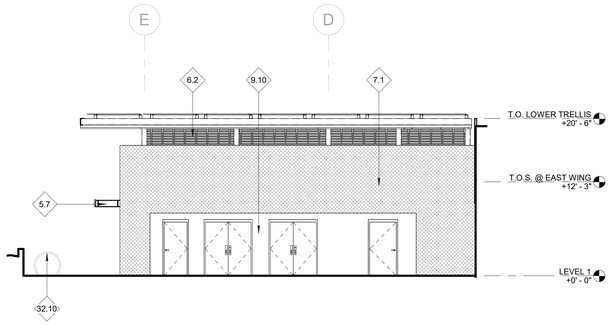

5 UTILITY CORRRIDOR - WEST
1/8" = 1'-0"

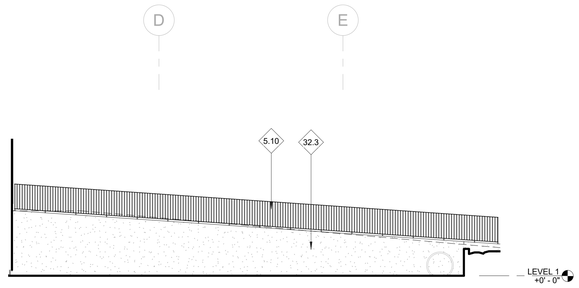

4 UTILITY CORRIDOR - EAST
1/8" = 1'-0"

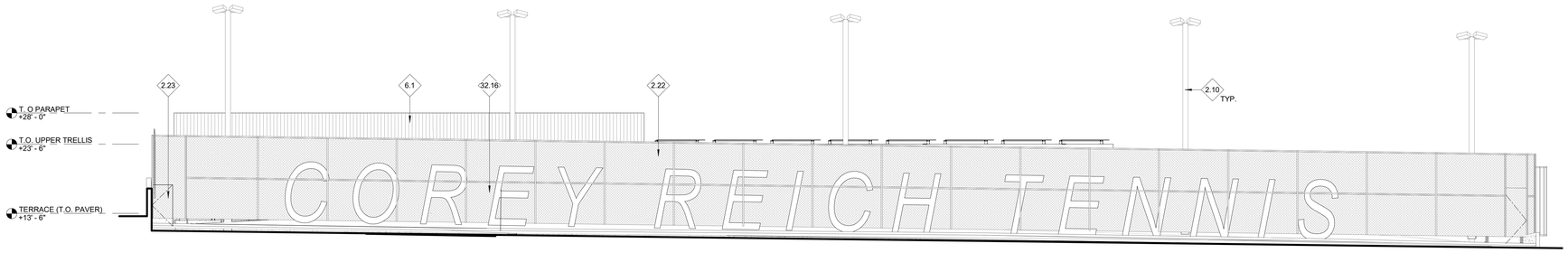

3 SOUTH TENNIS COURT FENCE ELEVATION
1/8" = 1'-0"

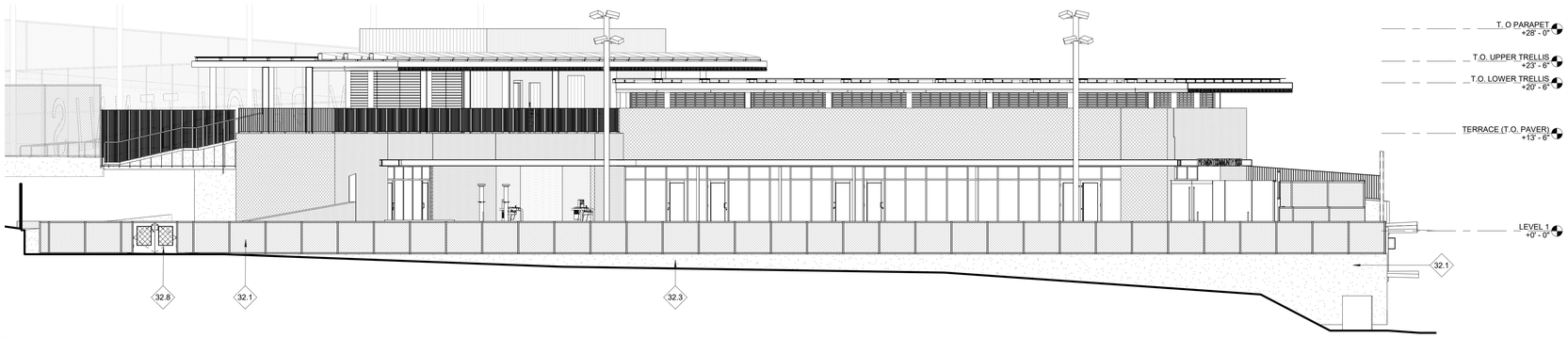

2 WEST SITE ELEVATION
1/8" = 1'-0"

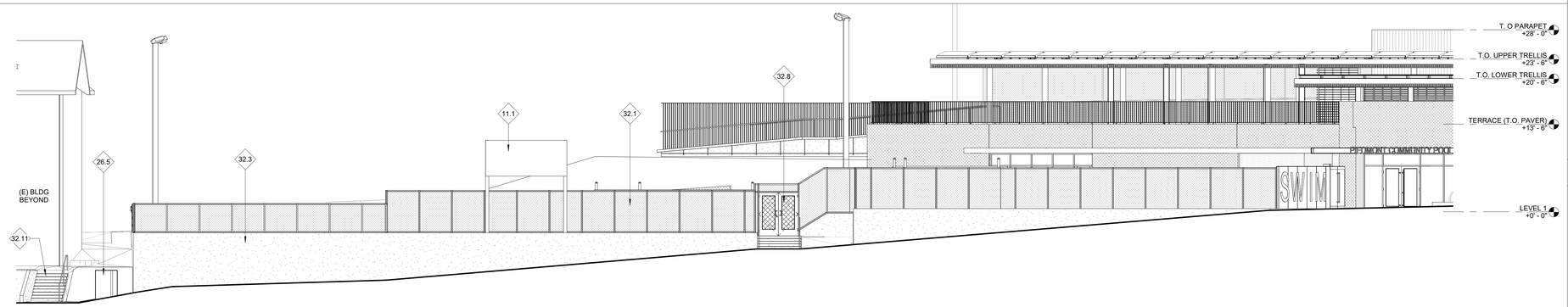

1 SOUTH SITE ELEVATION AT MAGNOLIA AVE.
1/8" = 1'-0"

GENERAL NOTES

1. FFE: +0' - 0" = +297.00
2. ALL EXPOSED C.I.P. CONC. TO RECEIVE WATERPROOF & ANTI-GRAFFITI COATING.
3. AUTOMATIC FIRE SPRINKLER SYSTEM THROUGHOUT BUILDING. SPRINKLERS SHALL BE DESIGNED TO COORDINATE WITH DUCTS, PIPING, CONDUIT, LIGHTING, ACCESS PANEL LOCATIONS AND OTHER CEILING ELEMENTS FOR A CLEAN, ARCHITECTURAL APPEARANCE.

SHEET NOTES

KEYNOTES

#	DESCRIPTION
2.10	EXISTING RELOCATED LIGHT POLE
2.22	EXISTING FENCE TO REMAIN
2.23	EXISTING GATE TO REMAIN
5.7	METAL TRELLIS, PAINTED
5.10	METAL GUARDRAIL, PAINTED
6.1	COMPOSITE WOOD SIDING
6.2	COMPOSITE WOOD SLAT SYSTEM
7.1	SLATE SHINGLE CLADDING
9.10	CEMENT PLASTER, PAINTED
11.1	SCOREBOARD (N.I.C.)
26.5	TRANSFORMER, S.E.D.
32.1	FENCING, VINYL COATED CHAIN LINK
32.3	CAST-IN-PLACE CONCRETE RETAINING WALL, S.S.D.
32.8	SWING GATE, VINYL COATED CHAIN LINK INFILL
32.10	BICYCLE RACKS, S.L.D.
32.11	CAST-IN-PLACE CONCRETE STEPS, S.L.D.
32.16	NEW CHAIN LINK GATE TO MATCH EXISTING

LEGEND

els architecture+ urban design
2040 Addison St, Berkeley, CA 94704
510.549.2929 | elsarch.com

PROJECT:

PIEDMONT COMMUNITY POOL

777 MAGNOLIA AVENUE PIEDMONT, CA 94611

CLIENT:

CITY OF PIEDMONT

120 VISTA AVENUE PIEDMONT, CA 94611

PROJECT TEAM:

ARCHITECT:
ELS ARCHITECTURE AND URBAN DESIGN
2040 Addison Street
Berkeley, CA 94704
P: 510.549.2929

CIVIL ENGINEER:
BKF ENGINEERS
4670 Willow Road, Suite 250
Pleasanton, CA 94588
P: (925) 396-7704

LANDSCAPE ARCHITECT:
SWA
2200 Bridgeway
Sausalito, CA 94965
P: 415.332.5100

STRUCTURAL ENGINEER:
FORELL/ELSESSER ENGINEERS, INC.
160 Pine Street, 6th Floor
San Francisco, CA 94111
P: 415.837.0700

MEP / FIRE PROTECTION:
GUTTMANN & BLAEVOET
1620 Montgomery Street, Suite 230
San Francisco, CA 94111
P: 415.655.4000

AQUATICS:
AQUATICS DESIGN GROUP
2226 Faraday Avenue
Carlsbad, CA 92008
P: 760.438.8400

SPECIFICATIONS
TOPFLIGHT SPECS
49 Geary Street, Suite 230
San Francisco, CA 94108-5748
P: 415.546.6033

REVISION

NUMBER	DATE	DESCRIPTION

ISSUE:
100% DESIGN DEVELOPMENT

DATE:
APRIL 30, 2022

STAMP:

NOT FOR CONSTRUCTION

SHEET TITLE:

EXTERIOR ELEVATIONS

SHEET NUMBER:

A302

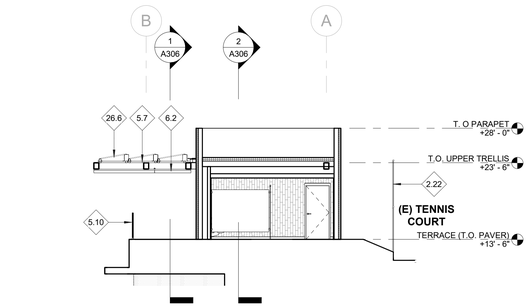

4 EXT. ELEV. @ ROOFTOP RESTROOM PASSAGE - WEST
1/8" = 1'-0"

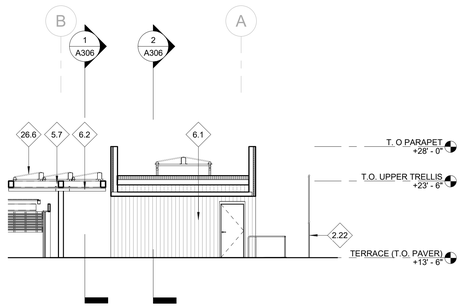

2 EXT. ELEV. @ ROOFTOP MECH PASSAGE - WEST
1/8" = 1'-0"

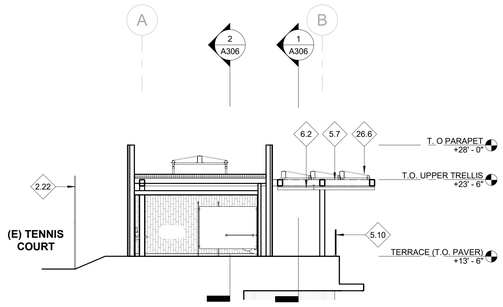

3 EXT. ELEV. @ ROOFTOP RESTROOM PASSAGE - EAST
1/8" = 1'-0"

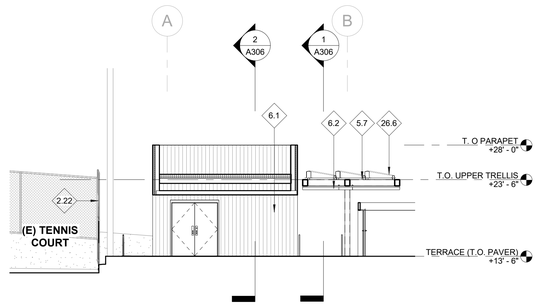

1 EXT. ELEV. @ ROOFTOP MECH PASSAGE - EAST
1/8" = 1'-0"

GENERAL NOTES

1. FFE: +0' - 0" = +297.00
2. ALL EXPOSED C.I.P. CONC. TO RECEIVE WATERPROOF & ANTI-GRAFFITI COATING.
3. AUTOMATIC FIRE SPRINKLER SYSTEM THROUGHOUT BUILDING. SPRINKLERS SHALL BE DESIGNED TO COORDINATE WITH DUCTS, PIPING, CONDUIT, LIGHTING, ACCESS PANEL LOCATIONS AND OTHER CEILING ELEMENTS FOR A CLEAN, ARCHITECTURAL APPEARANCE.

SHEET NOTES

KEYNOTES

#	DESCRIPTION
2.22	EXISTING FENCE TO REMAIN
5.7	METAL TRELLIS, PAINTED
5.10	METAL GUARDRAIL, PAINTED
6.1	COMPOSITE WOOD SIDING
6.2	COMPOSITE WOOD SLAT SYSTEM
26.6	PHOTOVOLTAIC THERMAL SYSTEM, S.E.D.

LEGEND

els architecture+ urban design
2040 Addison St, Berkeley, CA 94704
510.549.2929 | elsarch.com

PROJECT:

PIEDMONT COMMUNITY POOL

777 MAGNOLIA AVENUE PIEDMONT, CA 94611

CLIENT:

CITY OF PIEDMONT

120 VISTA AVENUE PIEDMONT, CA 94611

PROJECT TEAM:

ARCHITECT:
ELS ARCHITECTURE AND URBAN DESIGN
2040 Addison Street
Berkeley, CA 94704
P: 510.549.2929

CIVIL ENGINEER:
BKF ENGINEERS
4670 Willow Road, Suite 250
Pleasanton, CA 94588
P: (925) 396-7704

LANDSCAPE ARCHITECT:
SWA
2200 Bridgeway
Sausalito, CA 94965
P: 415.332.5100

STRUCTURAL ENGINEER:
FORELL/ELSESSER ENGINEERS, INC.
160 Pine Street, 6th Floor
San Francisco, CA 94111
P: 415.837.0700

MEP / FIRE PROTECTION:
GUTTMANN & BLAEVOET
1620 Montgomery Street, Suite 230
San Francisco, CA 94111
P: 415.655.4000

AQUATICS:
AQUATICS DESIGN GROUP
2226 Faraday Avenue
Carlsbad, CA 92008
P: 760.438.8400

SPECIFICATIONS
TOPFLIGHT SPECS
49 Geary Street, Suite 230
San Francisco, CA 94108-5748
P: 415.546.6033

REVISION

NUMBER	DATE	DESCRIPTION

ISSUE:
100% DESIGN DEVELOPMENT

DATE:
APRIL 30, 2022

STAMP:

NOT FOR CONSTRUCTION

SHEET TITLE:
EXTERIOR ELEVATIONS

SHEET NUMBER:
A303

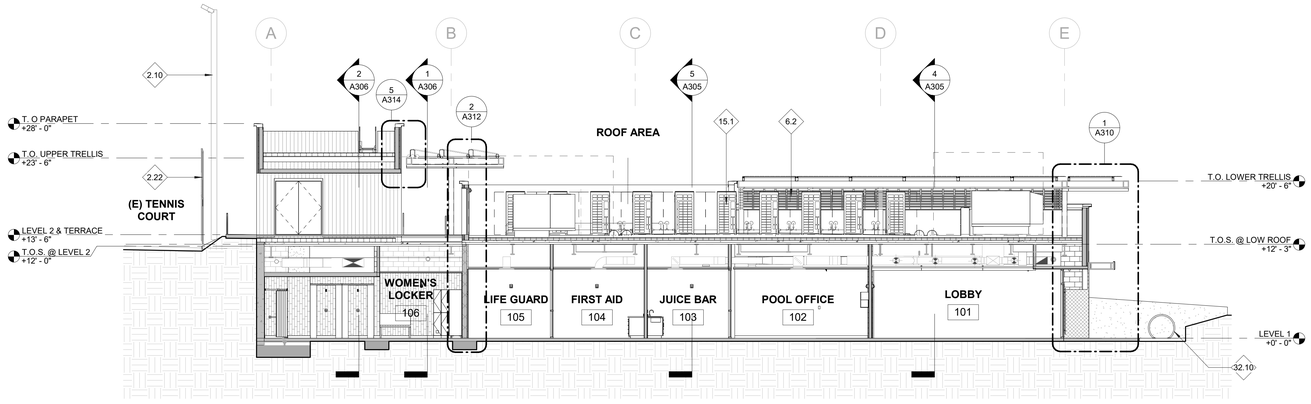

3 LONGITUDINAL BUILDING SECTION @ EAST WING - C
1/8" = 1'-0"

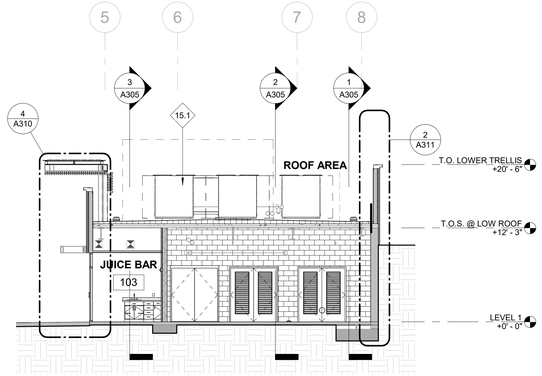

5 TRANSVERSE BUILDING SECTION @ EAST WING - B
1/8" = 1'-0"

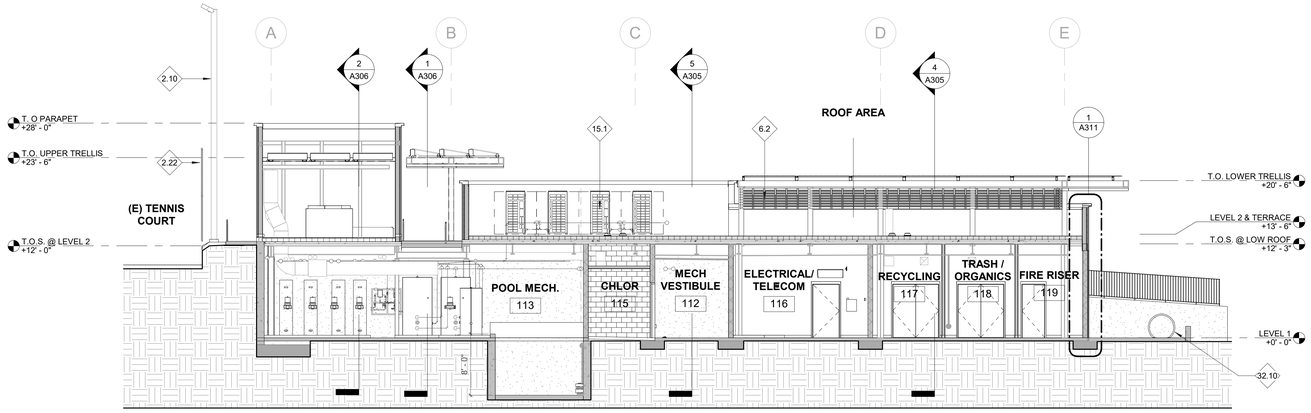

2 LONGITUDINAL BUILDING SECTION @ EAST WING - B
1/8" = 1'-0"

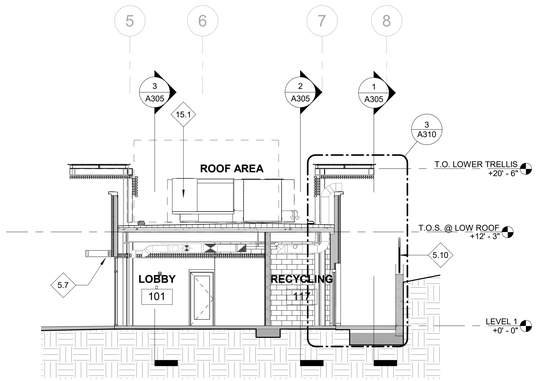

4 TRANSVERSE BUILDING SECTION @ EAST WING - A
1/8" = 1'-0"

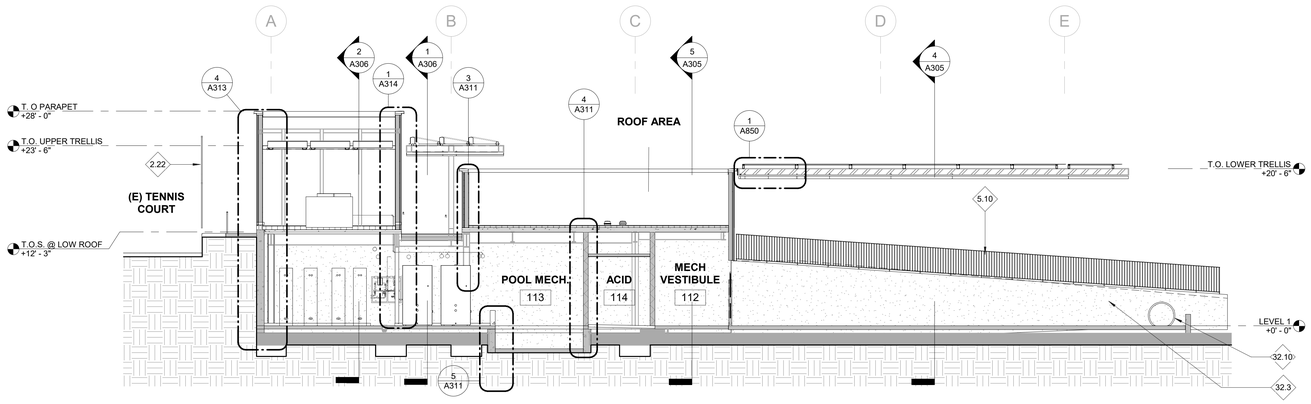

1 LONGITUDINAL BUILDING SECTION @ EAST WING - A
1/8" = 1'-0"

KEYNOTES

#	DESCRIPTION
2.10	EXISTING RELOCATED LIGHT POLE
2.22	EXISTING FENCE TO REMAIN
5.7	METAL TRELLIS, PAINTED
5.10	METAL GUARDRAIL, PAINTED
6.2	COMPOSITE WOOD SLAT SYSTEM
15.1	MECHANICAL EQUIPMENT, S.M.D.
32.3	CAST-IN-PLACE CONCRETE RETAINING WALL, S.S.D.
32.10	BICYCLE RACKS, S.L.D.

GENERAL NOTES

1. FFE: +0' - 0" = +297.00
2. ALL EXPOSED C.I.P. CONC. TO RECEIVE WATERPROOF & ANTI-GRAFFITI COATING.
3. AUTOMATIC FIRE SPRINKLER SYSTEM THROUGHOUT BUILDING. SPRINKLERS SHALL BE DESIGNED TO COORDINATE WITH DUCTS, PIPING, CONDUIT, LIGHTING, ACCESS PANEL LOCATIONS AND OTHER CEILING ELEMENTS FOR A CLEAN, ARCHITECTURAL APPEARANCE.

els architecture+ urban design
2040 Addison St, Berkeley, CA 94704
510.549.2929 | elsarch.com

PROJECT:

PIEDMONT COMMUNITY POOL
777 MAGNOLIA AVENUE
PIEDMONT, CA 94611

CLIENT:
CITY OF PIEDMONT
120 VISTA AVENUE PIEDMONT, CA 94611

PROJECT TEAM:

ARCHITECT:
ELS ARCHITECTURE AND URBAN DESIGN
2040 Addison Street
Berkeley, CA 94704
P: 510.549.2929

CIVIL ENGINEER:
BKF ENGINEERS
4670 Willow Road, Suite 250
Pleasanton, CA 94588
P: (925) 396-7704

LANDSCAPE ARCHITECT:
SWA
2200 Bridgeway
Sausalito, CA 94965
P: 415.332.5100

STRUCTURAL ENGINEER:
FORELL/ELSESSER ENGINEERS, INC.
160 Pine Street, 6th Floor
San Francisco, CA 94111
P: 415.837.0700

MEP / FIRE PROTECTION:
GUTTMANN & BLAEVOET
1620 Montgomery Street, Suite 230
San Francisco, CA 94111
P: 415.655.4000

AQUATICS:
AQUATICS DESIGN GROUP
2226 Faraday Avenue
Carlsbad, CA 92008
P: 760.438.8400

SPECIFICATIONS
TOPFLIGHT SPECS
49 Geary Street, Suite 230
San Francisco, CA 94108-5748
P: 415.546.6033

REVISION

NUMBER	DATE	DESCRIPTION

ISSUE:
100% DESIGN DEVELOPMENT

DATE:
APRIL 30, 2022

STAMP:
NOT FOR CONSTRUCTION

SHEET TITLE:
BUILDING SECTIONS

SHEET NUMBER:
A305

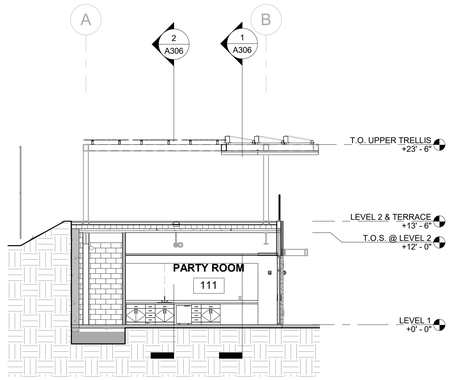

6 TRANSVERSE BUILDING SECTION @ NORTH WING - D
1/8" = 1'-0"

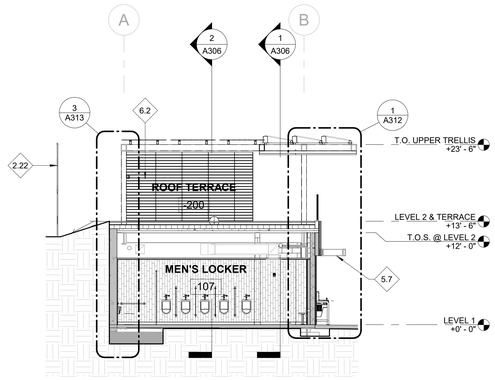

5 TRANSVERSE BUILDING SECTION @ NORTH WING - C
1/8" = 1'-0"

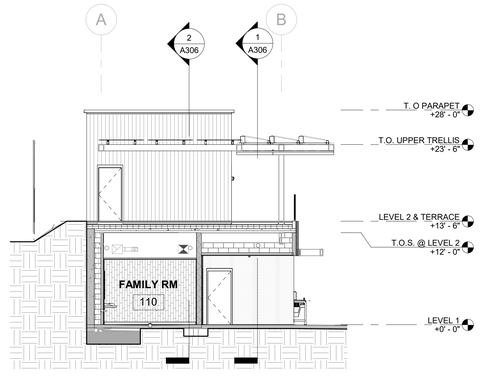

4 TRANSVERSE BUILDING SECTION @ NORTH WING - B
1/8" = 1'-0"

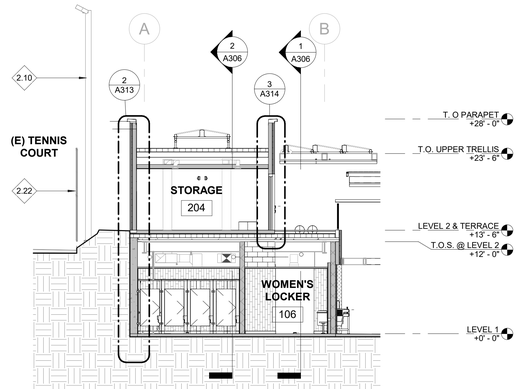

3 TRANSVERSE BUILDING SECTION @ NORTH WING - A
1/8" = 1'-0"

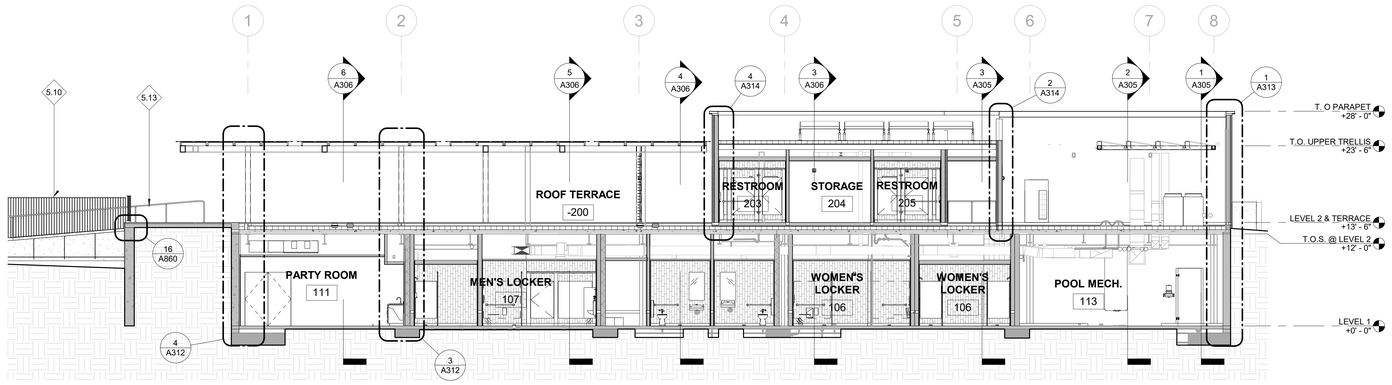

2 LONGITUDINAL BUILDING SECTION @ NORTH WING - B
1/8" = 1'-0"

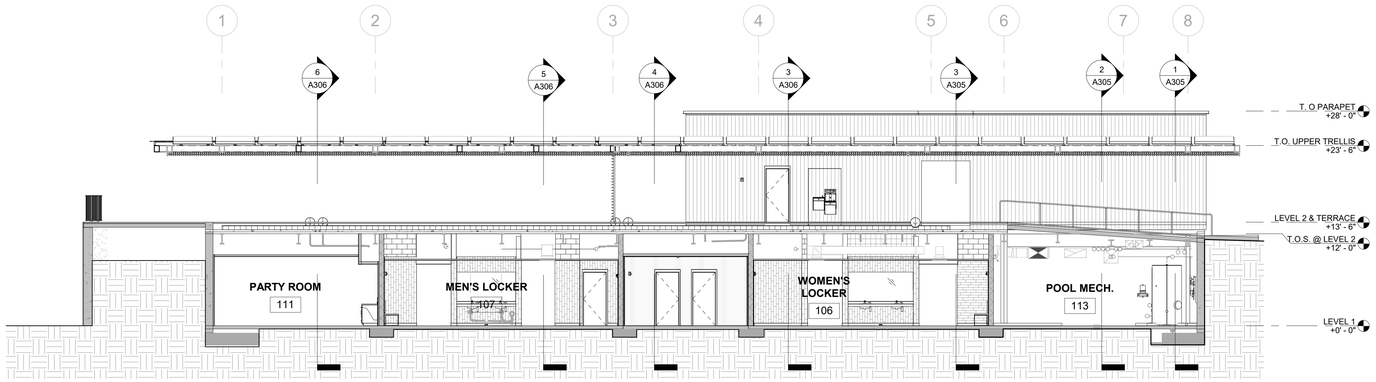

1 LONGITUDINAL BUILDING SECTION @ NORTH WING - A
1/8" = 1'-0"

LEGEND

KEYNOTES

#	DESCRIPTION
2.10	EXISTING RELOCATED LIGHT POLE
2.22	EXISTING FENCE TO REMAIN
5.7	METAL TRELLIS, PAINTED
5.10	METAL GUARDRAIL, PAINTED
5.13	METAL HANDRAIL, PAINTED
6.2	COMPOSITE WOOD SLAT SYSTEM

GENERAL NOTES

1. FFE: +0' - 0" = +297.00
2. ALL EXPOSED C.I.P. CONC. TO RECEIVE WATERPROOF & ANTI-GRAFFITI COATING.
3. AUTOMATIC FIRE SPRINKLER SYSTEM THROUGHOUT BUILDING. SPRINKLERS SHALL BE DESIGNED TO COORDINATE WITH DUCTS, PIPING, CONDUIT, LIGHTING, ACCESS PANEL LOCATIONS AND OTHER CEILING ELEMENTS FOR A CLEAN, ARCHITECTURAL APPEARANCE.

els architecture+ urban design
2040 Addison St, Berkeley, CA 94704
510.549.2929 | elsarch.com

PROJECT:

PIEDMONT COMMUNITY POOL
777 MAGNOLIA AVENUE
PIEDMONT, CA 94611

CLIENT:
CITY OF PIEDMONT
120 VISTA AVENUE PIEDMONT, CA 94611

PROJECT TEAM:

ARCHITECT:
ELS ARCHITECTURE AND URBAN DESIGN
2040 Addison Street
Berkeley, CA 94704
P: 510.549.2929

CIVIL ENGINEER:
BKF ENGINEERS
4670 Willow Road, Suite 250
Pleasanton, CA 94588
P: (925) 396-7704

LANDSCAPE ARCHITECT:
SWA
2200 Bridgeway
Sausalito, CA 94965
P: 415.332.5100

STRUCTURAL ENGINEER:
FORELL/ELSESSER ENGINEERS, INC.
160 Pine Street, 6th Floor
San Francisco, CA 94111
P: 415.837.0700

MEP / FIRE PROTECTION:
GUTTMANN & BLAEVOET
1620 Montgomery Street, Suite 230
San Francisco, CA 94111
P: 415.655.4000

AQUATICS:
AQUATICS DESIGN GROUP
2226 Faraday Avenue
Carlsbad, CA 92008
P: 760.438.8400

SPECIFICATIONS
TOPFLIGHT SPECS
49 Geary Street, Suite 230
San Francisco, CA 94108-5748
P: 415.546.6033

REVISION

NUMBER	DATE	DESCRIPTION

ISSUE:
100% DESIGN DEVELOPMENT

DATE:
APRIL 30, 2022

STAMP:
NOT FOR CONSTRUCTION

SHEET TITLE:
BUILDING SECTIONS

SHEET NUMBER:
A306

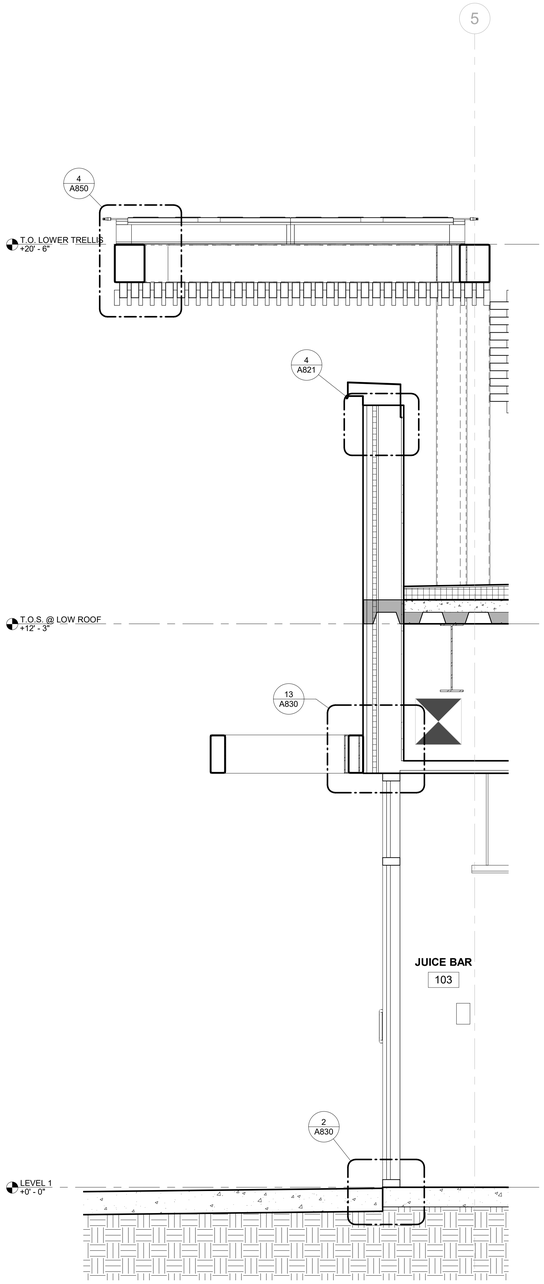

4 WALL SECTION @ JUICE BAR - GRID LINE 5
3/4" = 1'-0"

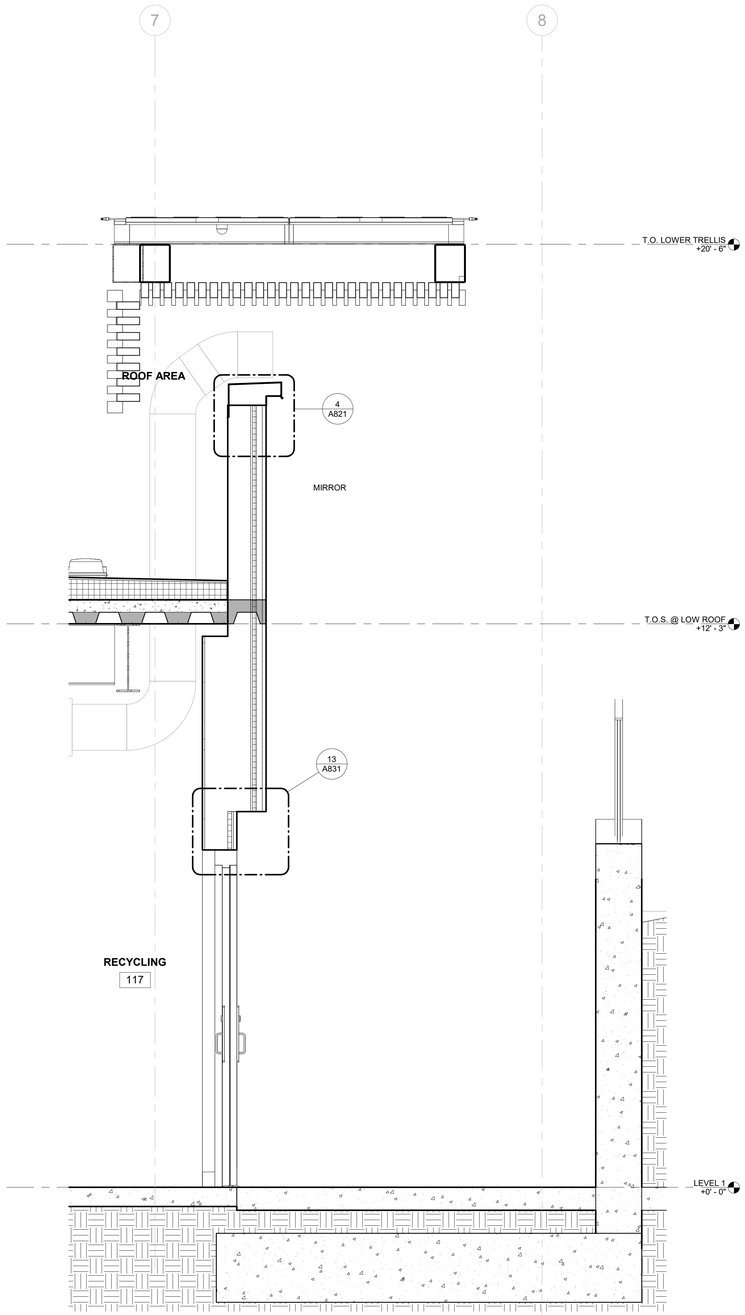

3 WALL SECTION @ RECYCLING - GRID LINE 7
3/4" = 1'-0"

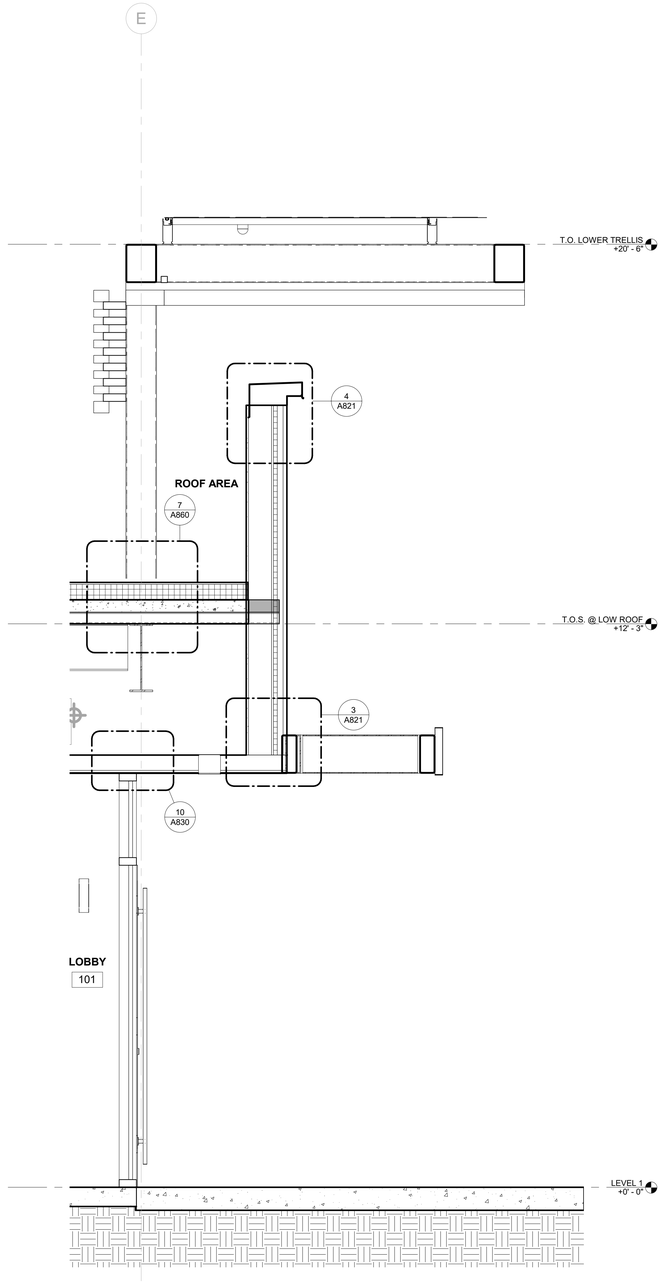

1 WALL SECTION @ LOBBY - GIRD LINE E
3/4" = 1'-0"

KEYNOTES

GENERAL NOTES

1. FFE: +0' - 0" = +297.00 (CONFIRM)
2. ALL EXPOSED C.I.P. CONC. TO RECEIVE WATERPROOF & ANTI-GRAFFITI COATING.
3. AUTOMATIC FIRE SPRINKLER SYSTEM THROUGHOUT BUILDING. SPRINKLERS SHALL BE DESIGNED TO COORDINATE WITH DUCTS, PIPING, CONDUIT, LIGHTING, ACCESS PANEL LOCATIONS AND OTHER CEILING ELEMENTS FOR A CLEAN, ARCHITECTURAL APPEARANCE.
4. ALL OPENINGS ARE FULL OR 1/2 BLOCK CMU MODULES U.O.N.
5. LOCATIONS OF DRAINS ARE MEASURE TO GRIDLINES, ALL FLOOR DRAINS ARE CENTERED IN THEIR RESPECTIVE SPACES, U.O.N.
6. REFER TO SPECIFICATIONS FOR LIST OF MATERIAL FINISHES, COLORS AND PAINT COLORS

els architecture+ urban design
2040 Addison St, Berkeley, CA 94704
510.549.2929 | elsarch.com

PROJECT:

PIEDMONT COMMUNITY POOL
777 MAGNOLIA AVENUE
PIEDMONT, CA 94611

CLIENT:
CITY OF PIEDMONT
120 VISTA AVENUE PIEDMONT, CA 94611

PROJECT TEAM:

ARCHITECT:
ELS ARCHITECTURE AND URBAN DESIGN
2040 Addison Street
Berkeley, CA 94704
P: 510.549.2929

CIVIL ENGINEER:
BKF ENGINEERS
4670 Willow Road, Suite 250
Pleasanton, CA 94588
P: (925) 396-7704

LANDSCAPE ARCHITECT:
SWA
2200 Bridgeway
Sausalito, CA 94965
P: 415.332.5100

STRUCTURAL ENGINEER:
FORELL/ELSESSER ENGINEERS, INC.
160 Pine Street, 6th Floor
San Francisco, CA 94111
P: 415.837.0700

MEP / FIRE PROTECTION:
GUTTMANN & BLAEVOET
1620 Montgomery Street, Suite 230
San Francisco, CA 94111
P: 415.655.4000

AQUATICS:
AQUATICS DESIGN GROUP
2226 Faraday Avenue
Carlsbad, CA 92008
P: 760.438.8400

SPECIFICATIONS
TOPFLIGHT SPECS
49 Geary Street, Suite 230
San Francisco, CA 94108-5748
P: 415.546.6033

REVISION

NUMBER	DATE	DESCRIPTION

ISSUE:
100% DESIGN DEVELOPMENT

DATE:
APRIL 30, 2022

STAMP:
NOT FOR CONSTRUCTION

SHEET TITLE:
WALL SECTIONS

SHEET NUMBER:
A310

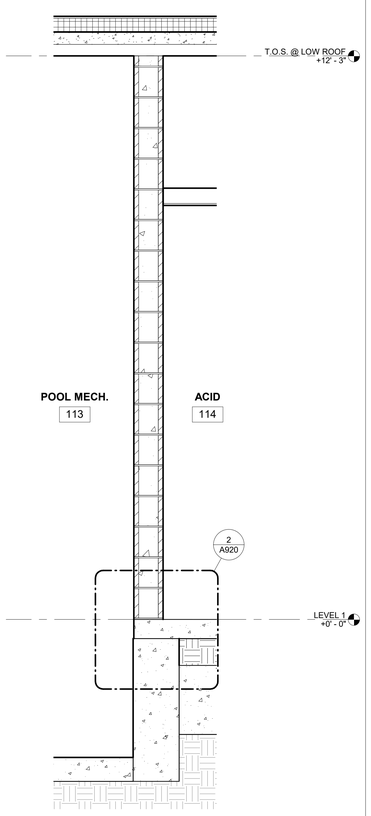

4 WALL SECTION @ POOL MECH. WELL
3/4" = 1'-0"

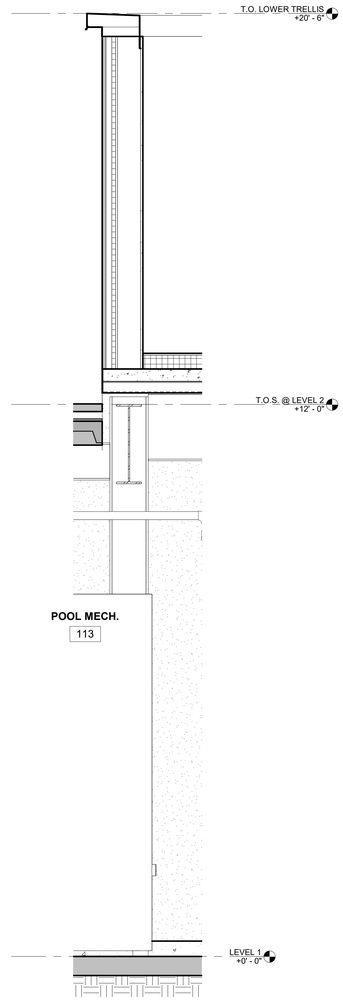

3 PARTIAL WALL SECTION @ EAST WING POOL MECH.
3/4" = 1'-0"

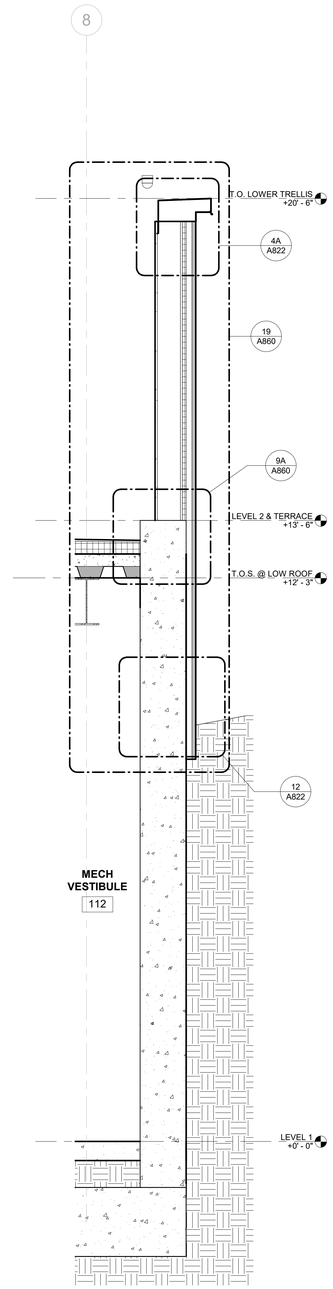

2 WALL SECTION @ MECH. VESTIBULE - GRID LINE 8
3/4" = 1'-0"

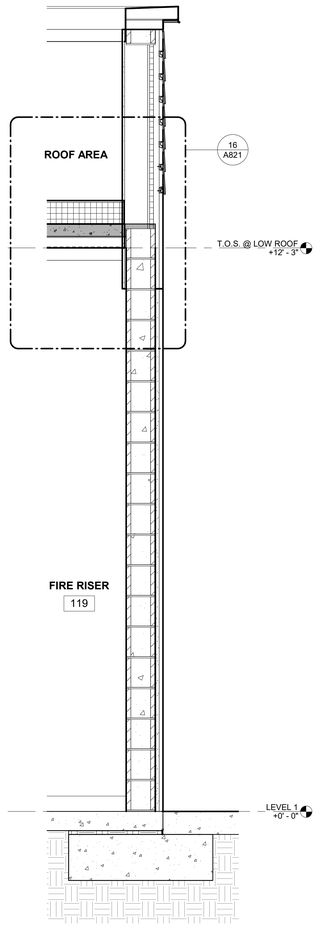

1 WALL SECTION @ FIRE RISER
3/4" = 1'-0"

KEYNOTES

GENERAL NOTES

1. FFE: +0' - 0" = +297.00 (CONFIRM)
2. ALL EXPOSED C.I.P. CONC. TO RECEIVE WATERPROOF & ANTI-GRAFFITI COATING.
3. AUTOMATIC FIRE SPRINKLER SYSTEM THROUGHOUT BUILDING. SPRINKLERS SHALL BE DESIGNED TO COORDINATE WITH DUCTS, PIPING, CONDUIT, LIGHTING, ACCESS PANEL LOCATIONS AND OTHER CEILING ELEMENTS FOR A CLEAN, ARCHITECTURAL APPEARANCE.
4. ALL OPENINGS ARE FULL OR 1/2 BLOCK CMU MODULES U.O.N.
5. LOCATIONS OF DRAINS ARE MEASURE TO GRIDLINES, ALL FLOOR DRAINS ARE CENTERED IN THEIR RESPECTIVE SPACES, U.O.N.
6. REFER TO SPECIFICATIONS FOR LIST OF MATERIAL FINISHES, COLORS AND PAINT COLORS

els architecture+ urban design
2040 Addison St, Berkeley, CA 94704
510.549.2929 | elsarch.com

PROJECT:

PIEDMONT COMMUNITY POOL
777 MAGNOLIA AVENUE
PIEDMONT, CA 94611

CLIENT:

CITY OF PIEDMONT
120 VISTA AVENUE PIEDMONT, CA 94611

PROJECT TEAM:

ARCHITECT:
ELS ARCHITECTURE AND URBAN DESIGN
2040 Addison Street
Berkeley, CA 94704
P: 510.549.2929

CIVIL ENGINEER:
BKF ENGINEERS
4670 Willow Road, Suite 250
Pleasanton, CA 94588
P: (925) 396-7704

LANDSCAPE ARCHITECT:
SWA
2200 Bridgeway
Sausalito, CA 94965
P: 415.332.5100

STRUCTURAL ENGINEER:
FORELL/ELSESSER ENGINEERS, INC.
160 Pine Street, 6th Floor
San Francisco, CA 94111
P: 415.837.0700

MEP / FIRE PROTECTION:
GUTTMANN & BLAEVOET
1620 Montgomery Street, Suite 230
San Francisco, CA 94111
P: 415.655.4000

AQUATICS:
AQUATICS DESIGN GROUP
2226 Faraday Avenue
Carlsbad, CA 92008
P: 760.438.8400

SPECIFICATIONS
TOPFLIGHT SPECS
49 Geary Street, Suite 230
San Francisco, CA 94108-5748
P: 415.546.6033

REVISION

NUMBER	DATE	DESCRIPTION

ISSUE:
100% DESIGN DEVELOPMENT

DATE:
APRIL 30, 2022

STAMP:
NOT FOR CONSTRUCTION

SHEET TITLE:
WALL SECTIONS

SHEET NUMBER:
A311

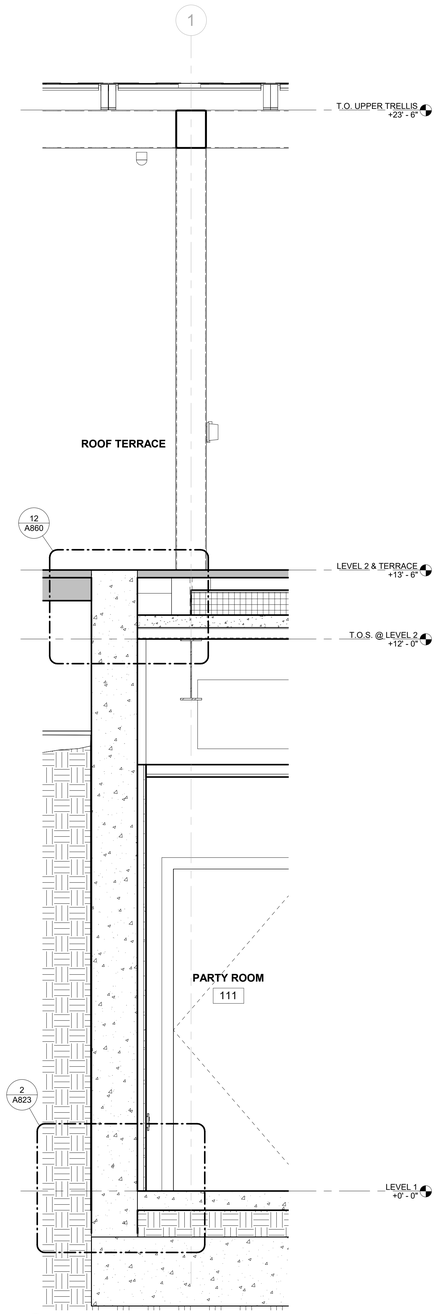

4 WALL SECTION @ PARTY ROOM - GRID LINE 1
3/4" = 1'-0"

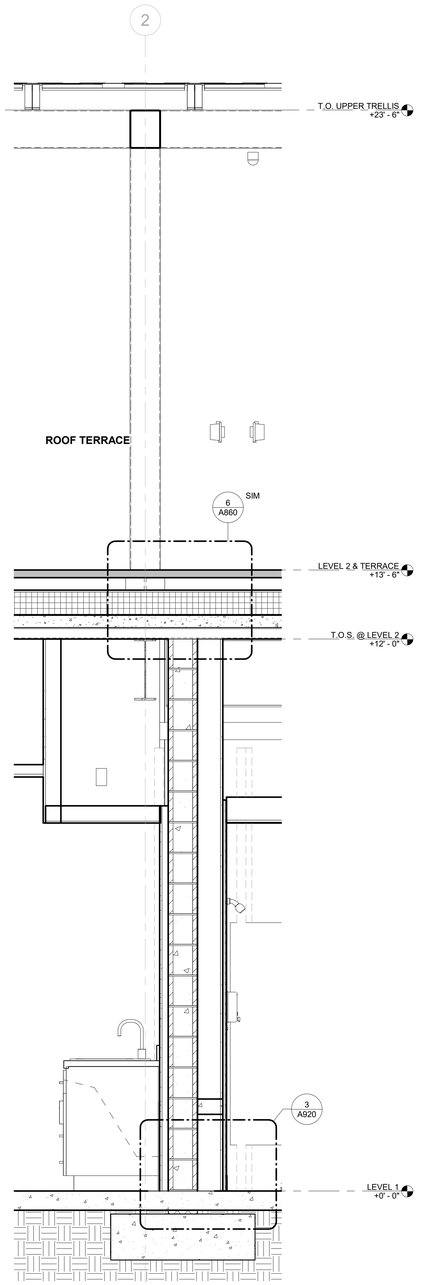

3 WALL SECTION @ PARTY ROOM - GRID LINE 2
3/4" = 1'-0"

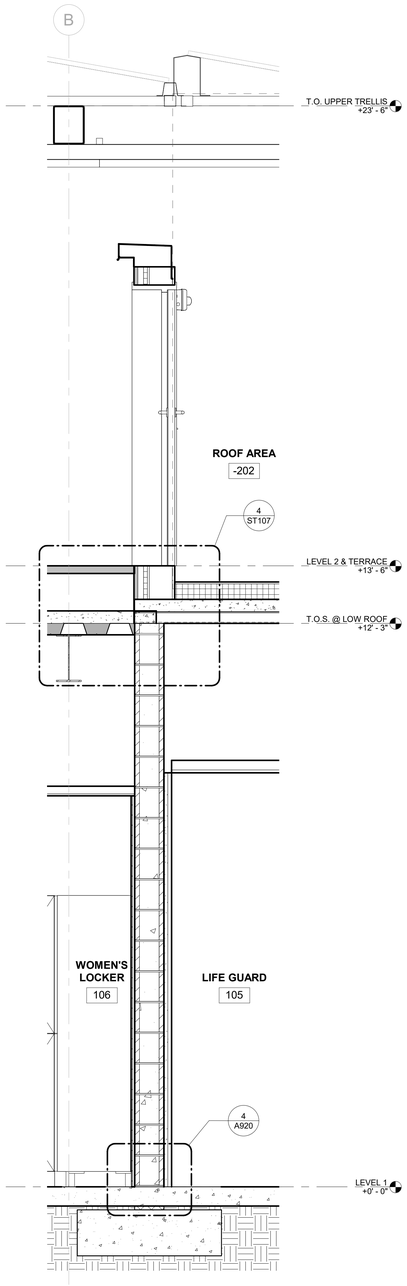

2 WALL SECTION @ LOCKER ROOM - GRID LINE B
3/4" = 1'-0"

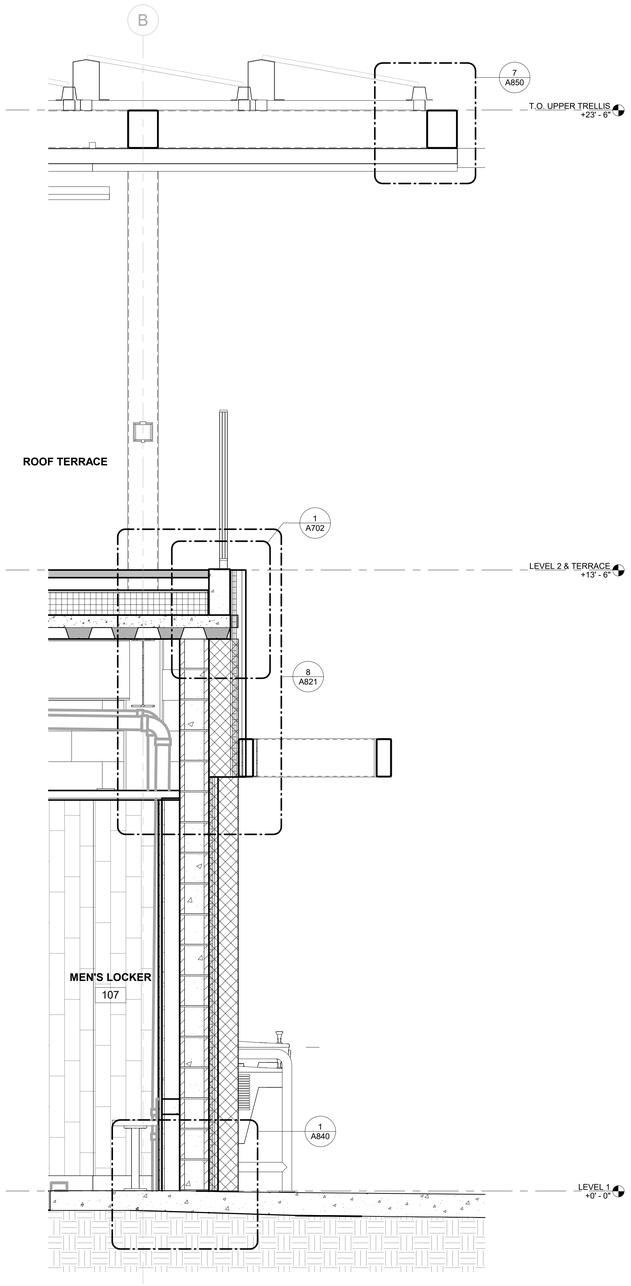

1 WALL SECTION @ MEN'S LOCKER - GRID LINE B
3/4" = 1'-0"

KEYNOTES

GENERAL NOTES

1. FFE: +0' - 0" = +297.00 (CONFIRM)
2. ALL EXPOSED C.I.P. CONC. TO RECEIVE WATERPROOF & ANTI-GRAFFITI COATING.
3. AUTOMATIC FIRE SPRINKLER SYSTEM THROUGHOUT BUILDING. SPRINKLERS SHALL BE DESIGNED TO COORDINATE WITH DUCTS, PIPING, CONDUIT, LIGHTING, ACCESS PANEL LOCATIONS AND OTHER CEILING ELEMENTS FOR A CLEAN, ARCHITECTURAL APPEARANCE.
4. ALL OPENINGS ARE FULL OR 1/2 BLOCK CMU MODULES U.O.N.
5. LOCATIONS OF DRAINS ARE MEASURE TO GRIDLINES, ALL FLOOR DRAINS ARE CENTERED IN THEIR RESPECTIVE SPACES, U.O.N.
6. REFER TO SPECIFICATIONS FOR LIST OF MATERIAL FINISHES, COLORS AND PAINT COLORS

els architecture+ urban design
2040 Addison St, Berkeley, CA 94704
510.549.2929 | elsarch.com

PROJECT:

PIEDMONT COMMUNITY POOL
777 MAGNOLIA AVENUE
PIEDMONT, CA 94611

CLIENT:

CITY OF PIEDMONT
120 VISTA AVENUE PIEDMONT, CA 94611

PROJECT TEAM:

ARCHITECT:
ELS ARCHITECTURE AND URBAN DESIGN
2040 Addison Street
Berkeley, CA 94704
P: 510.549.2929

CIVIL ENGINEER:
BKF ENGINEERS
4670 Willow Road, Suite 250
Pleasanton, CA 94588
P: (925) 396-7704

LANDSCAPE ARCHITECT:
SWA
2200 Bridgeway
Sausalito, CA 94965
P: 415.332.5100

STRUCTURAL ENGINEER:
FORELL/ELSESSER ENGINEERS, INC.
160 Pine Street, 6th Floor
San Francisco, CA 94111
P: 415.837.0700

MEP / FIRE PROTECTION:
GUTTMANN & BLAEVOET
1620 Montgomery Street, Suite 230
San Francisco, CA 94111
P: 415.655.4000

AQUATICS:
AQUATICS DESIGN GROUP
2226 Faraday Avenue
Carlsbad, CA 92008
P: 760.438.8400

SPECIFICATIONS
TOPFLIGHT SPECS
49 Geary Street, Suite 230
San Francisco, CA 94108-5748
P: 415.546.6033

REVISION

NUMBER	DATE	DESCRIPTION

ISSUE:
100% DESIGN DEVELOPMENT

DATE:
APRIL 30, 2022

STAMP:

NOT FOR CONSTRUCTION

SHEET TITLE:
WALL SECTIONS

SHEET NUMBER:
A312

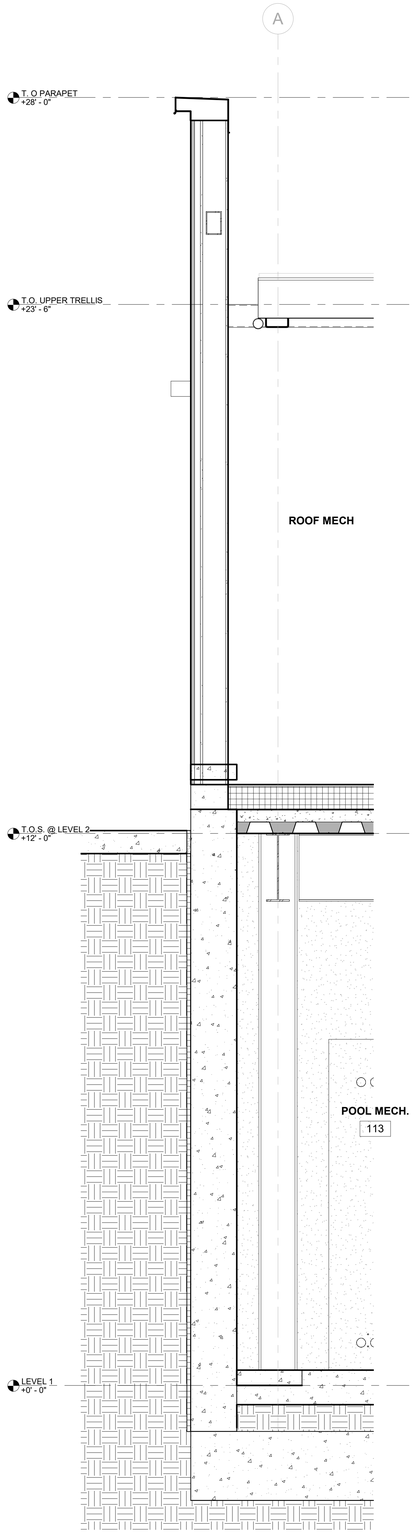

4 WALL SECTION - POOL MECH. - GRID LINE A
3/4" = 1'-0"

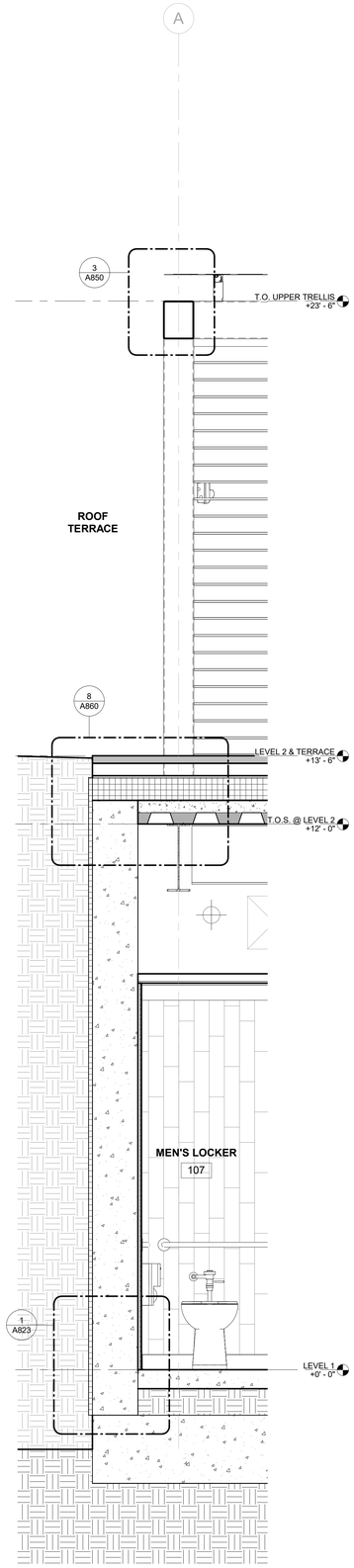

3 WALL SECTION @ MEN'S LOCKER - GRID LINE A
3/4" = 1'-0"

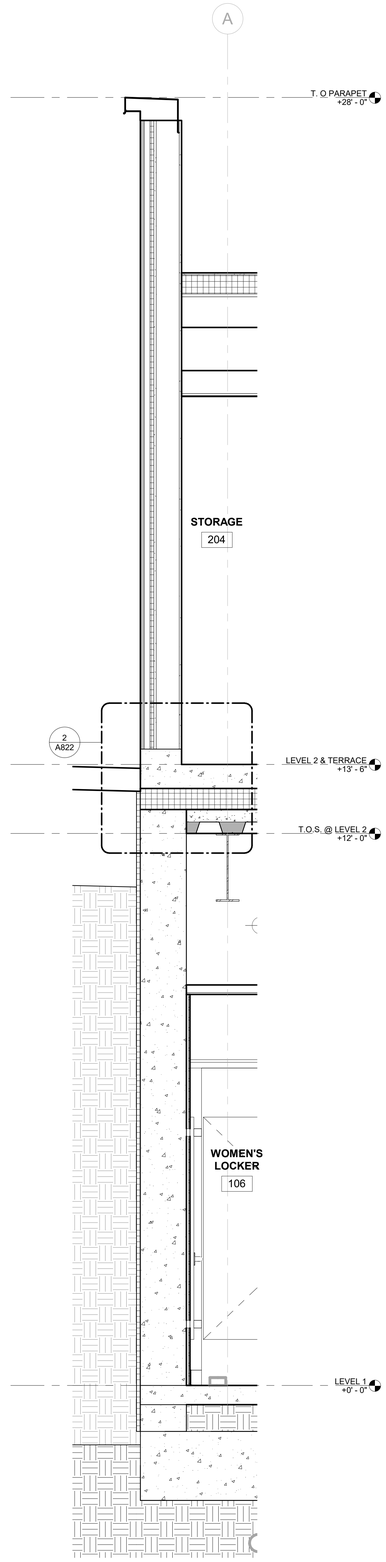

2 WALL SECTION - WOMEN'S LOCKER - GRID LINE A
3/4" = 1'-0"

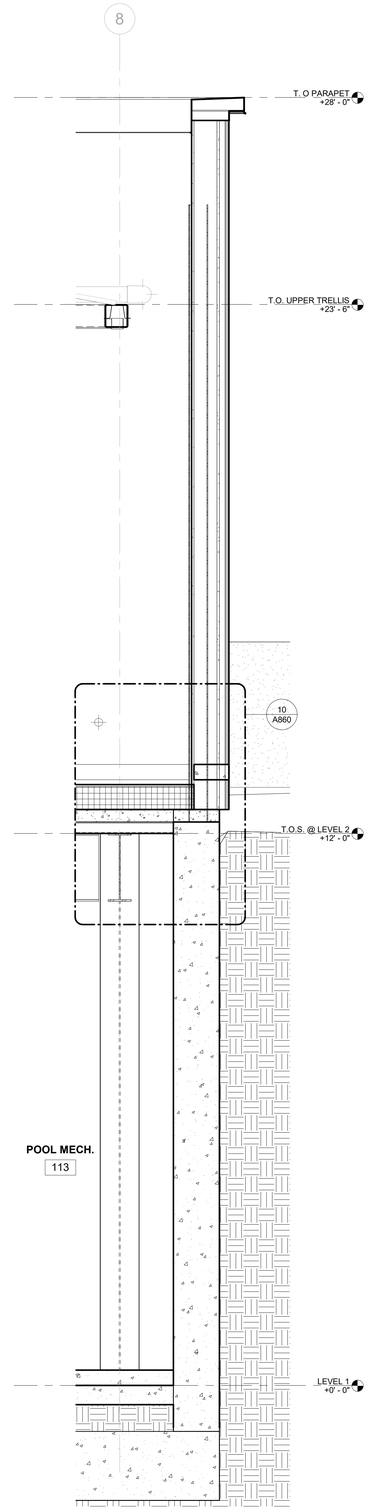

1 WALL SECTION @ POOL MECH. - GRID LINE 8
3/4" = 1'-0"

GENERAL NOTES

1. FFE: +0' - 0" = +297.00 (CONFIRM)
2. ALL EXPOSED C.I.P. CONC. TO RECEIVE WATERPROOF & ANTI-GRAFFITI COATING.
3. AUTOMATIC FIRE SPRINKLER SYSTEM THROUGHOUT BUILDING. SPRINKLERS SHALL BE DESIGNED TO COORDINATE WITH DUCTS, PIPING, CONDUIT, LIGHTING, ACCESS PANEL LOCATIONS AND OTHER CEILING ELEMENTS FOR A CLEAN, ARCHITECTURAL APPEARANCE.
4. ALL OPENINGS ARE FULL OR 1/2 BLOCK CMU MODULES U.O.N.
5. LOCATIONS OF DRAINS ARE MEASURE TO GRIDLINES, ALL FLOOR DRAINS ARE CENTERED IN THEIR RESPECTIVE SPACES, U.O.N.
6. REFER TO SPECIFICATIONS FOR LIST OF MATERIAL FINISHES, COLORS AND PAINT COLORS

SHEET NOTES

KEYNOTES

LEGEND

els architecture+ urban design
2040 Addison St, Berkeley, CA 94704
510.549.2929 | elsarch.com

PROJECT:

PIEDMONT COMMUNITY POOL
777 MAGNOLIA AVENUE
PIEDMONT, CA 94611

CLIENT:
CITY OF PIEDMONT
120 VISTA AVENUE PIEDMONT, CA 94611

PROJECT TEAM:

ARCHITECT:
ELS ARCHITECTURE AND URBAN DESIGN
2040 Addison Street
Berkeley, CA 94704
P: 510.549.2929

CIVIL ENGINEER:
BKF ENGINEERS
4670 Willow Road, Suite 250
Pleasanton, CA 94588
P: (925) 396-7704

LANDSCAPE ARCHITECT:
SWA
2200 Bridgeway
Sausalito, CA 94965
P: 415.332.5100

STRUCTURAL ENGINEER:
FORELL/ELSESSER ENGINEERS, INC.
160 Pine Street, 6th Floor
San Francisco, CA 94111
P: 415.837.0700

MEP / FIRE PROTECTION:
GUTTMANN & BLAEVOET
1620 Montgomery Street, Suite 230
San Francisco, CA 94111
P: 415.655.4000

AQUATICS:
AQUATICS DESIGN GROUP
2226 Faraday Avenue
Carlsbad, CA 92008
P: 760.438.8400

SPECIFICATIONS
TOPFLIGHT SPECS
49 Geary Street, Suite 230
San Francisco, CA 94108-5748
P: 415.546.6033

REVISION

NUMBER	DATE	DESCRIPTION

ISSUE:
100% DESIGN DEVELOPMENT

DATE:
APRIL 30, 2022

STAMP:
NOT FOR CONSTRUCTION

SHEET TITLE:
WALL SECTIONS

SHEET NUMBER:
A313

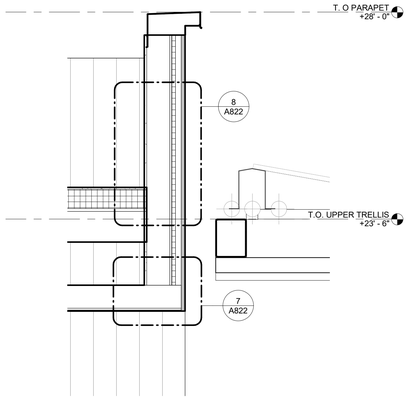

5 WALL SECTION - PARAPET ROOF OVER RESTROOM
3/4" = 1'-0"

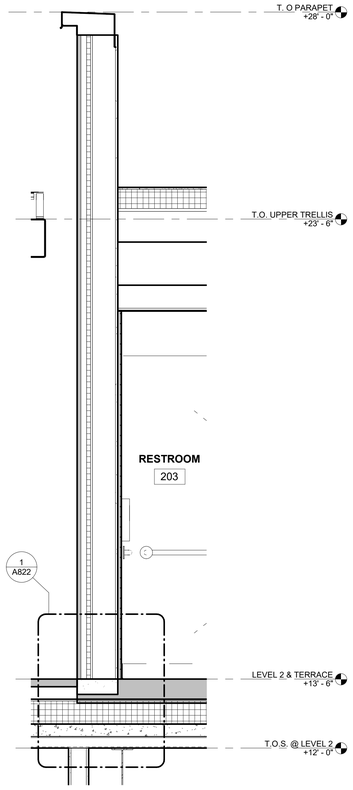

4 WALL SECTION @ ROOF TERRACE AND RESTROOM
3/4" = 1'-0"

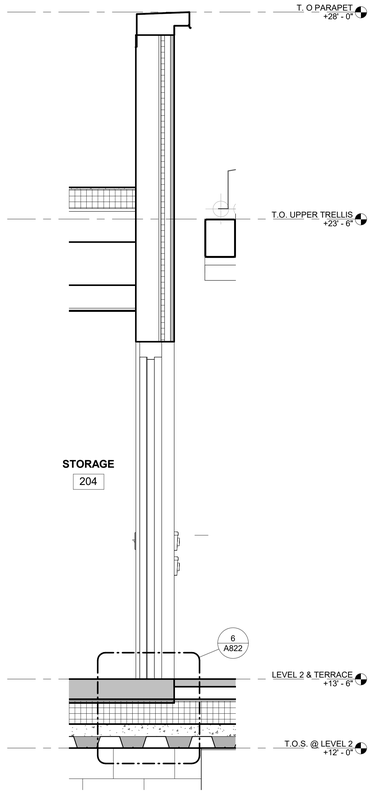

3 WALL SECTION @ STORAGE ON ROOF DECK
3/4" = 1'-0"

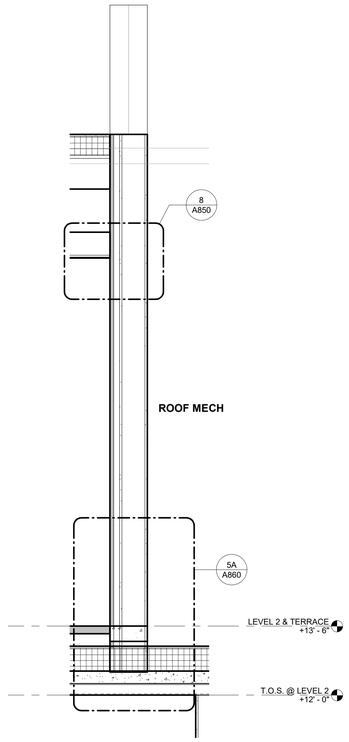

2 WALL SECTION @ MECHANICAL ENCLOSURE
3/4" = 1'-0"

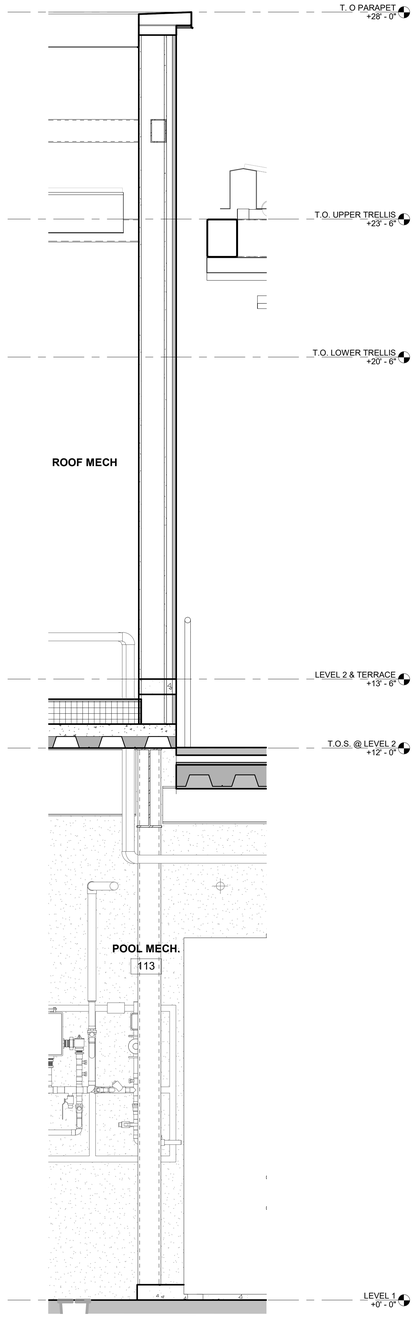

1 WALL SECTION @ EXTERIOR MECH. ON ROOF DECK
3/4" = 1'-0"

KEYNOTES

GENERAL NOTES

1. FFE: +0' - 0" = +297.00 (CONFIRM)
2. ALL EXPOSED C.I.P. CONC. TO RECEIVE WATERPROOF & ANTI-GRAFFITI COATING.
3. AUTOMATIC FIRE SPRINKLER SYSTEM THROUGHOUT BUILDING. SPRINKLERS SHALL BE DESIGNED TO COORDINATE WITH DUCTS, PIPING, CONDUIT, LIGHTING, ACCESS PANEL LOCATIONS AND OTHER CEILING ELEMENTS FOR A CLEAN, ARCHITECTURAL APPEARANCE.
4. ALL OPENINGS ARE FULL OR 1/2 BLOCK CMU MODULES U.O.N.
5. LOCATIONS OF DRAINS ARE MEASURE TO GRIDLINES, ALL FLOOR DRAINS ARE CENTERED IN THEIR RESPECTIVE SPACES, U.O.N.
6. REFER TO SPECIFICATIONS FOR LIST OF MATERIAL FINISHES, COLORS AND PAINT COLORS

els architecture+ urban design
2040 Addison St, Berkeley, CA 94704
510.549.2929 | elsarch.com

PROJECT:

PIEDMONT COMMUNITY POOL
777 MAGNOLIA AVENUE
PIEDMONT, CA 94611

CLIENT:
CITY OF PIEDMONT
120 VISTA AVENUE PIEDMONT, CA 94611

PROJECT TEAM:

ARCHITECT:
ELS ARCHITECTURE AND URBAN DESIGN
2040 Addison Street
Berkeley, CA 94704
P: 510.549.2929

CIVIL ENGINEER:
BKF ENGINEERS
4670 Willow Road, Suite 250
Pleasanton, CA 94588
P: (925) 396-7704

LANDSCAPE ARCHITECT:
SWA
2200 Bridgeway
Sausalito, CA 94965
P: 415.332.5100

STRUCTURAL ENGINEER:
FORELL/ELSESSER ENGINEERS, INC.
160 Pine Street, 6th Floor
San Francisco, CA 94111
P: 415.837.0700

MEP / FIRE PROTECTION:
GUTTMANN & BLAEVOET
1620 Montgomery Street, Suite 230
San Francisco, CA 94111
P: 415.655.4000

AQUATICS:
AQUATICS DESIGN GROUP
2226 Faraday Avenue
Carlsbad, CA 92008
P: 760.438.8400

SPECIFICATIONS
TOPFLIGHT SPECS
49 Geary Street, Suite 230
San Francisco, CA 94108-5748
P: 415.546.6033

REVISION

NUMBER	DATE	DESCRIPTION

ISSUE:
100% DESIGN DEVELOPMENT

DATE:
APRIL 30, 2022

STAMP:
NOT FOR CONSTRUCTION

SHEET TITLE:
WALL SECTIONS

SHEET NUMBER:
A314

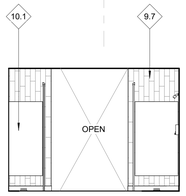

12 WOMEN'S LOCKER 106 - SHOWER - WEST
1/4" = 1'-0"

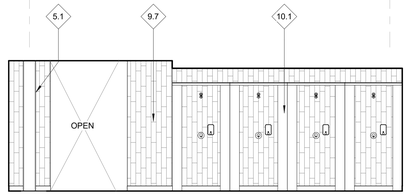

13 WOMEN'S LOCKER 106 - SHOWER - SOUTH
1/4" = 1'-0"

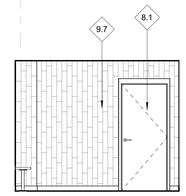

5 WOMEN'S LOCKER 106 - VESTIBULE - WEST
1/4" = 1'-0"

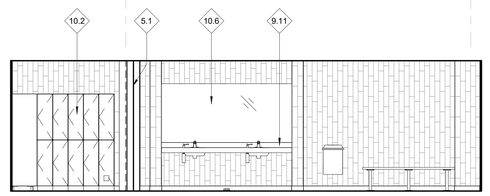

4 WOMEN'S LOCKER 106 - VESTIBULE & LAVS - SOUTH
1/4" = 1'-0"

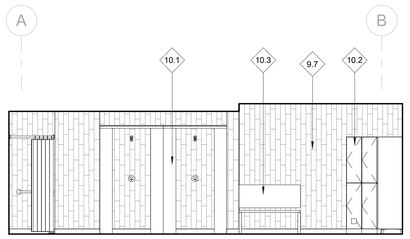

11 WOMEN'S LOCKER 106 - SHOWER - EAST
1/4" = 1'-0"

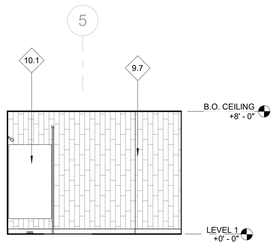

10 WOMEN'S LOCKER 106 - SHOWER - NORTH
1/4" = 1'-0"

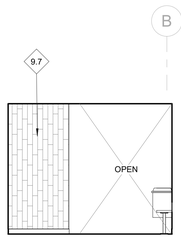

3 WOMEN'S LOCKER 106 - VESTIBULE - EAST
1/4" = 1'-0"

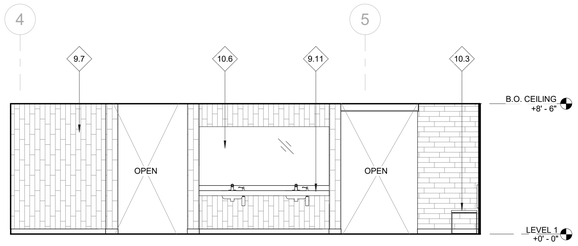

2 WOMEN'S LOCKER 106 - VESTIBULE & LAVS - NORTH
1/4" = 1'-0"

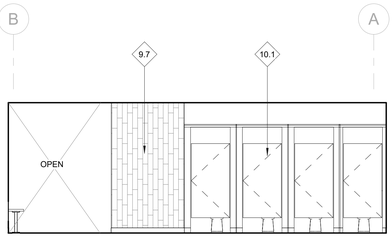

9 WOMEN'S LOCKER 106 - RESTROOM - WEST
1/4" = 1'-0"

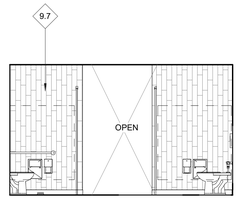

8 WOMEN'S LOCKER 106 - RESTROOM - SOUTH
1/4" = 1'-0"

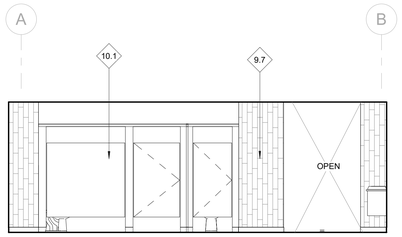

7 WOMEN'S LOCKER 106 - RESTROOM - EAST
1/4" = 1'-0"

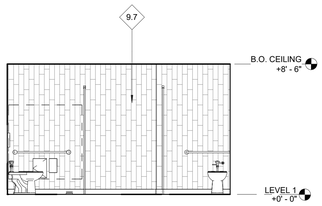

6 WOMEN'S LOCKER 106 - RESTROOM - NORTH
1/4" = 1'-0"

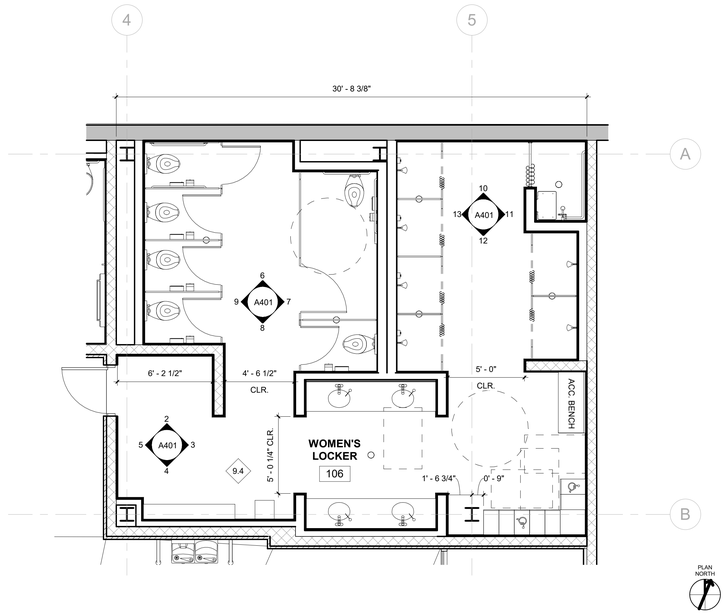

1 ENLARGED PLAN - WOMEN'S LOCKER 106
1/4" = 1'-0"

LEGEND

- METAL STUD FRAMING
- CMU WALL
- ACCESSIBLE LOCKER (LOWER COMPARTMENT ACC.)
- # TOILET ACCESSORY KEY - SEE SHEET A020 FOR SCHEDULE

KEYNOTES

#	DESCRIPTION
5.1	STRUCTURE, S.S.D., PAINTED
8.1	HOLLOW METAL DOORS, PAINTED
9.4	RESINOUS EPOXY FLOORING WITH COARSE AGGREGATE
9.7	CERAMIC WALL TILE
9.11	SOLID SURFACE BACKSPLASH & COUNTERTOP
10.1	PHENOLIC SHOWER / TOILET / URINAL PARTITIONS
10.2	PHENOLIC LOCKERS
10.3	PHENOLIC BENCH, COLOR TO MATCH LOCKERS, ON POWDER COATED ALUMINUM PEDESTALS
10.6	MIRROR

GENERAL NOTES

1. FFE: +0' - 0" = +297.00
2. ALL EXPOSED C.I.P. CONC. TO RECEIVE WATERPROOF & ANTI-GRAFFITI COATING.
3. AUTOMATIC FIRE SPRINKLER SYSTEM THROUGHOUT BUILDING. SPRINKLERS SHALL BE DESIGNED TO COORDINATE WITH DUCTS, PIPING, CONDUIT, LIGHTING, ACCESS PANEL LOCATIONS AND OTHER CEILING ELEMENTS FOR A CLEAN, ARCHITECTURAL APPEARANCE.

els architecture+ urban design
2040 Addison St, Berkeley, CA 94704
510.549.2929 | elsarch.com

PROJECT:

PIEDMONT COMMUNITY POOL
777 MAGNOLIA AVENUE
PIEDMONT, CA 94611

CLIENT:

CITY OF PIEDMONT
120 VISTA AVENUE PIEDMONT, CA 94611

PROJECT TEAM:

ARCHITECT:
ELS ARCHITECTURE AND URBAN DESIGN
2040 Addison Street
Berkeley, CA 94704
P: 510.549.2929

CIVIL ENGINEER:
BKF ENGINEERS
4670 Willow Road, Suite 250
Pleasanton, CA 94588
P: (925) 396-7704

LANDSCAPE ARCHITECT:
SWA
2200 Bridgeway
Sausalito, CA 94965
P: 415.332.5100

STRUCTURAL ENGINEER:
FORELL/ELSESSER ENGINEERS, INC.
160 Pine Street, 6th Floor
San Francisco, CA 94111
P: 415.837.0700

MEP / FIRE PROTECTION:
GUTTMANN & BLAEVOET
1620 Montgomery Street, Suite 230
San Francisco, CA 94111
P: 415.655.4000

AQUATICS:
AQUATICS DESIGN GROUP
2226 Faraday Avenue
Carlsbad, CA 92008
P: 760.438.8400

SPECIFICATIONS
TOPFLIGHT SPECS
49 Geary Street, Suite 230
San Francisco, CA 94108-5748
P: 415.546.6033

REVISION

NUMBER	DATE	DESCRIPTION

ISSUE:
100% DESIGN DEVELOPMENT

DATE:
APRIL 30, 2022

STAMP:

NOT FOR CONSTRUCTION

SHEET TITLE:
ENLARGED PLANS & INTERIOR ELEVATIONS - LOCKER ROOM

SHEET NUMBER:
A401

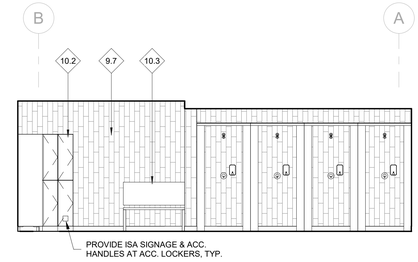

13 MEN'S LOCKER 107 - SHOWER - WEST
1/4" = 1'-0"

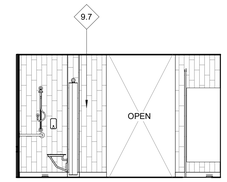

12 MEN'S LOCKER 107 - SHOWER - SOUTH
1/4" = 1'-0"

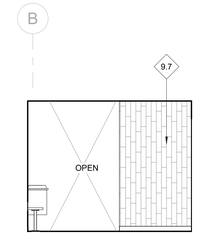

5 MEN'S LOCKER 107 - VESTIBULE - WEST
1/4" = 1'-0"

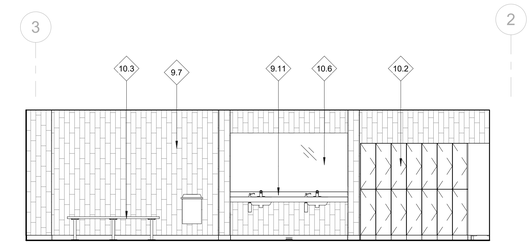

4 MEN'S LOCKER 107 - VESTIBULE & LAVS - SOUTH
1/4" = 1'-0"

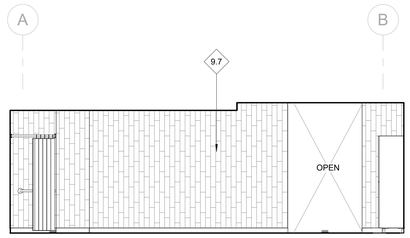

11 MEN'S LOCKER 107 - SHOWER - EAST
1/4" = 1'-0"

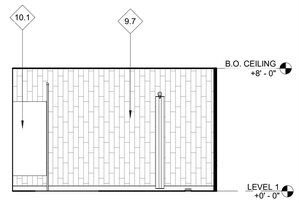

10 MEN'S LOCKER 107 - SHOWER - NORTH
1/4" = 1'-0"

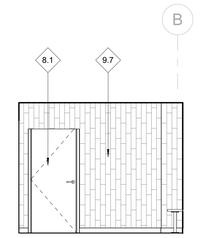

3 MEN'S LOCKER 107 - VESTIBULE - EAST
1/4" = 1'-0"

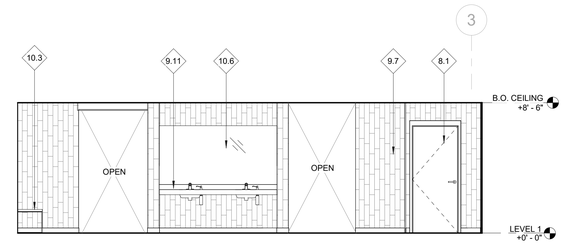

2 MEN'S LOCKER 107 - VESTIBULE & LAVS - NORTH
1/4" = 1'-0"

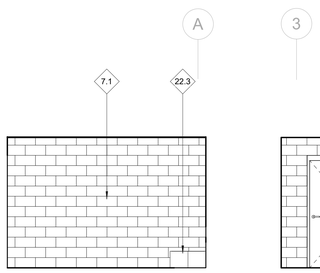

17 JANITOR 113 - WEST
1/4" = 1'-0"

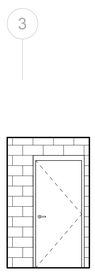

16 JANITOR 113 - SOUTH
1/4" = 1'-0"

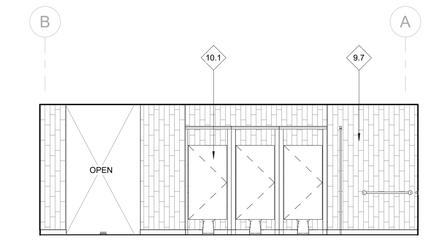

9 MEN'S LOCKER 107 - RESTROOM - WEST
1/4" = 1'-0"

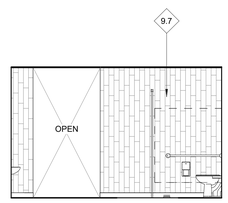

8 MEN'S LOCKER 107 - RESTROOM - SOUTH
1/4" = 1'-0"

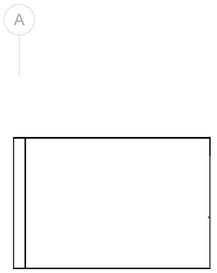

15 JANITOR 111 - EAST
1/4" = 1'-0"

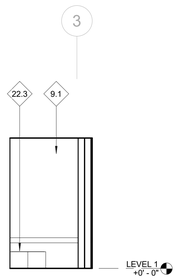

14 JANITOR 111 - NORTH
1/4" = 1'-0"

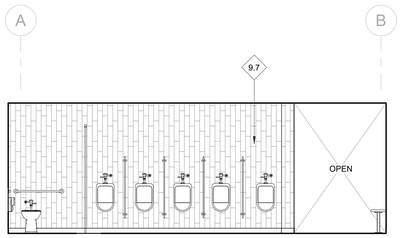

7 MEN'S LOCKER 107 - RESTROOM - EAST
1/4" = 1'-0"

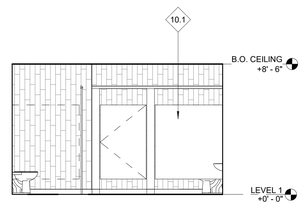

6 MEN'S LOCKER 107 - RESTROOM - NORTH
1/4" = 1'-0"

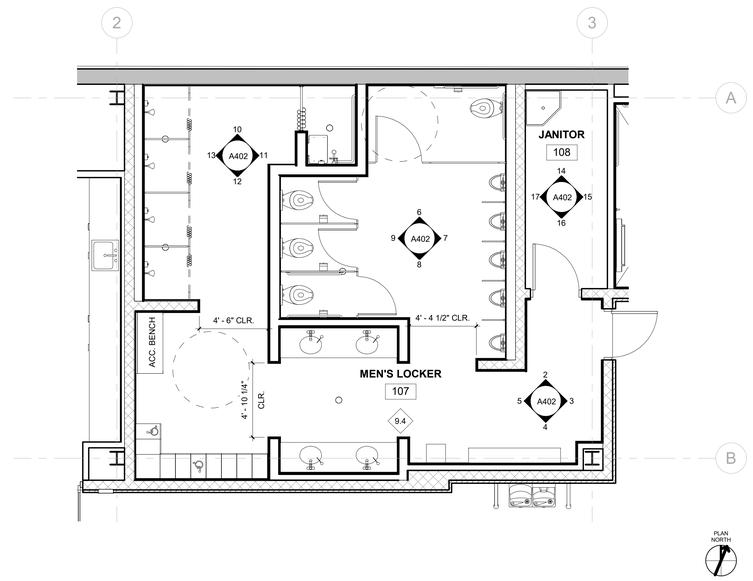

1 ENLARGED PLAN - MEN'S LOCKER 107
1/4" = 1'-0"

LEGEND

- METAL STUD FRAMING
- CMU WALL
- ACCESSIBLE LOCKER (LOWER COMPARTMENT ACC.)
- # TOILET ACCESSORY KEY - SEE SHEET A020 FOR SCHEDULE

KEYNOTES

#	DESCRIPTION
7.1	SLATE SHINGLE CLADDING
8.1	HOLLOW METAL DOORS, PAINTED
9.1	GYP. BD., PAINTED - WATER RESISTANT AT WET LOCATIONS
9.4	RESINOUS EPOXY FLOORING WITH COARSE AGGREGATE
9.7	CERAMIC WALL TILE
9.11	SOLID SURFACE BACKSPLASH & COUNTERTOP
10.1	PHENOLIC SHOWER / TOILET / URINAL PARTITIONS
10.2	PHENOLIC LOCKERS
10.3	PHENOLIC BENCH, COLOR TO MATCH LOCKERS, ON POWDER COATED ALUMINUM PEDESTALS
10.6	MIRROR
22.3	MOP SINK, S.P.D.

GENERAL NOTES

1. FFE: +0' - 0" = +297.00
2. ALL EXPOSED C.I.P. CONC. TO RECEIVE WATERPROOF & ANTI-GRAFFITI COATING.
3. AUTOMATIC FIRE SPRINKLER SYSTEM THROUGHOUT BUILDING. SPRINKLERS SHALL BE DESIGNED TO COORDINATE WITH DUCTS, PIPING, CONDUIT, LIGHTING, ACCESS PANEL LOCATIONS AND OTHER CEILING ELEMENTS FOR A CLEAN, ARCHITECTURAL APPEARANCE.

els architecture+ urban design
2040 Addison St, Berkeley, CA 94704
510.549.2929 | elsarch.com

PROJECT:

PIEDMONT COMMUNITY POOL
777 MAGNOLIA AVENUE
PIEDMONT, CA 94611

CLIENT:

CITY OF PIEDMONT
120 VISTA AVENUE PIEDMONT, CA 94611

PROJECT TEAM:

ARCHITECT:
ELS ARCHITECTURE AND URBAN DESIGN
2040 Addison Street
Berkeley, CA 94704
P: 510.549.2929

CIVIL ENGINEER:
BKF ENGINEERS
4670 Willow Road, Suite 250
Pleasanton, CA 94588
P: (925) 396-7704

LANDSCAPE ARCHITECT:
SWA
2200 Bridgeway
Sausalito, CA 94965
P: 415.332.5100

STRUCTURAL ENGINEER:
FORELL/ELSESSER ENGINEERS, INC.
160 Pine Street, 6th Floor
San Francisco, CA 94111
P: 415.837.0700

MEP / FIRE PROTECTION:
GUTTMANN & BLAEVOET
1620 Montgomery Street, Suite 230
San Francisco, CA 94111
P: 415.655.4000

AQUATICS:
AQUATICS DESIGN GROUP
2226 Faraday Avenue
Carlsbad, CA 92008
P: 760.438.8400

SPECIFICATIONS
TOPFLIGHT SPECS
49 Geary Street, Suite 230
San Francisco, CA 94108-5748
P: 415.546.6033

REVISION

NUMBER	DATE	DESCRIPTION

ISSUE:
100% DESIGN DEVELOPMENT

DATE:
APRIL 30, 2022

STAMP:

NOT FOR CONSTRUCTION

SHEET TITLE:

ENLARGED PLANS & INTERIOR ELEVATIONS - LOCKER ROOM

SHEET NUMBER:

A402

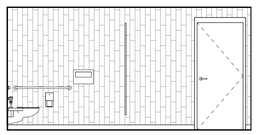

22 RESTROOM 206 - WEST
1/4" = 1'-0"

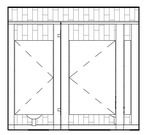

21 RESTROOM 206 - SOUTH
1/4" = 1'-0"

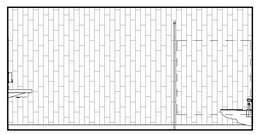

20 RESTROOM 206 - EAST
1/4" = 1'-0"

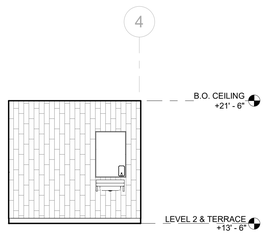

19 RESTROOM 206 - NORTH
1/4" = 1'-0"

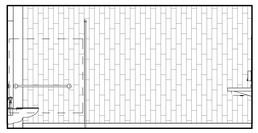

18 RESTROOM 204 - WEST
1/4" = 1'-0"

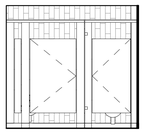

17 RESTROOM 204 - SOUTH
1/4" = 1'-0"

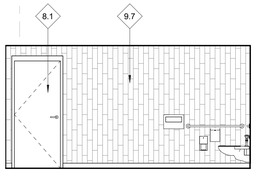

16 RESTROOM 204 - EAST
1/4" = 1'-0"

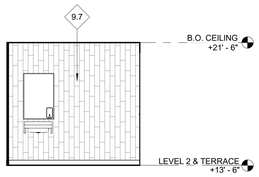

15 RESTROOM 204 - NORTH
1/4" = 1'-0"

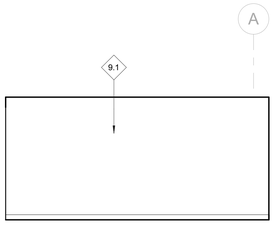

14 STORAGE 205 - WEST
1/4" = 1'-0"

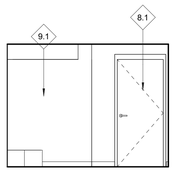

13 STORAGE 205 - SOUTH
1/4" = 1'-0"

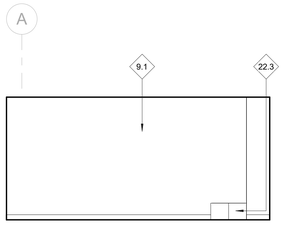

12 STORAGE 205 - EAST
1/4" = 1'-0"

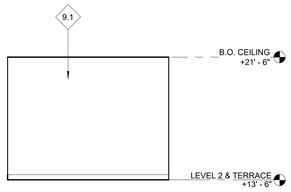

11 STORAGE 205 - NORTH
1/4" = 1'-0"

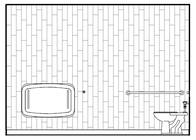

10 FAMILY RESTROOM 110 - WEST
1/4" = 1'-0"

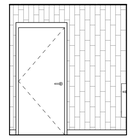

9 FAMILY RESTROOM 110 - SOUTH
1/4" = 1'-0"

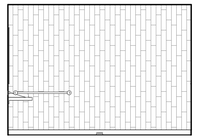

8 FAMILY RESTROOM 110 - EAST
1/4" = 1'-0"

7 FAMILY RESTROOM 110 - NORTH
1/4" = 1'-0"

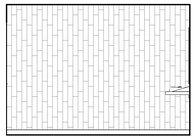

6 FAMILY RESTROOM 109 - WEST
1/4" = 1'-0"

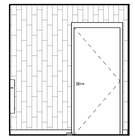

5 FAMILY RESTROOM 109 - SOUTH
1/4" = 1'-0"

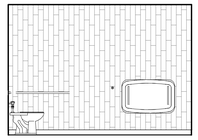

4 FAMILY RESTROOM 109 - EAST
1/4" = 1'-0"

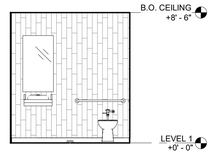

3 FAMILY RESTROOM 109 - NORTH
1/4" = 1'-0"

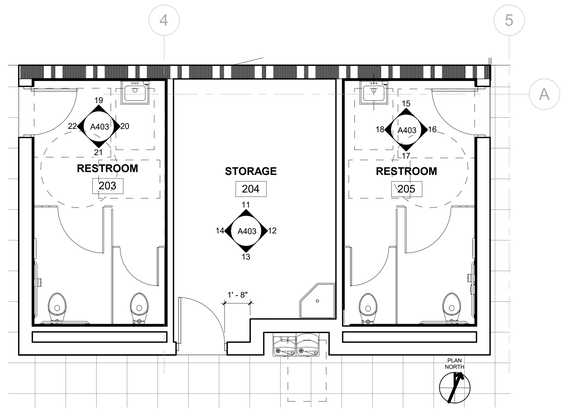

2 ENLARGED PLAN - RESTROOMS & STORAGE
1/4" = 1'-0"

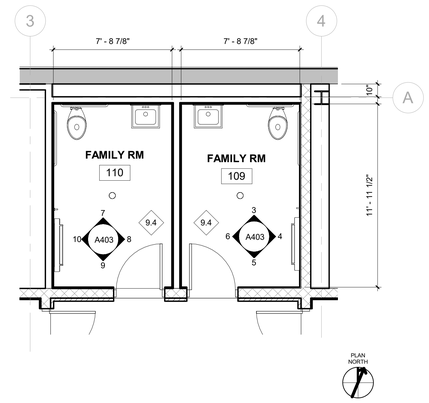

1 ENLARGED PLAN - FAMILY RESTROOMS
1/4" = 1'-0"

LEGEND

- METAL STUD FRAMING
- CMU WALL
- ACCESSIBLE LOCKER (LOWER COMPARTMENT ACC.)
- TOILET ACCESSORY KEY - SEE SHEET A020 FOR SCHEDULE

KEYNOTES

#	DESCRIPTION
8.1	HOLLOW METAL DOORS, PAINTED
9.1	GYP. BD., PAINTED - WATER RESISTANT AT WET LOCATIONS
9.4	RESINOUS EPOXY FLOORING WITH COARSE AGGREGATE
9.7	CERAMIC WALL TILE
22.3	MOP SINK, S.P.D.

GENERAL NOTES

1. FFE: +0' - 0" = +297.00
2. ALL EXPOSED C.I.P. CONC. TO RECEIVE WATERPROOF & ANTI-GRAFFITI COATING.
3. AUTOMATIC FIRE SPRINKLER SYSTEM THROUGHOUT BUILDING. SPRINKLERS SHALL BE DESIGNED TO COORDINATE WITH DUCTS, PIPING, CONDUIT, LIGHTING, ACCESS PANEL LOCATIONS AND OTHER CEILING ELEMENTS FOR A CLEAN, ARCHITECTURAL APPEARANCE.

els architecture+ urban design
2040 Addison St, Berkeley, CA 94704
510.549.2929 | elsarch.com

PROJECT:

PIEDMONT COMMUNITY POOL
777 MAGNOLIA AVENUE
PIEDMONT, CA 94611

CLIENT:

CITY OF PIEDMONT
120 VISTA AVENUE PIEDMONT, CA 94611

PROJECT TEAM:

ARCHITECT:
ELS ARCHITECTURE AND URBAN DESIGN
2040 Addison Street
Berkeley, CA 94704
P: 510.549.2929

CIVIL ENGINEER:
BKF ENGINEERS
4670 Willow Road, Suite 250
Pleasanton, CA 94588
P: (925) 396-7704

LANDSCAPE ARCHITECT:
SWA
2200 Bridgeway
Sausalito, CA 94965
P: 415.332.5100

STRUCTURAL ENGINEER:
FORELL/ELSESSER ENGINEERS, INC.
160 Pine Street, 6th Floor
San Francisco, CA 94111
P: 415.837.0700

MEP / FIRE PROTECTION:
GUTTMANN & BLAEVOET
1620 Montgomery Street, Suite 230
San Francisco, CA 94111
P: 415.655.4000

AQUATICS:
AQUATICS DESIGN GROUP
2226 Faraday Avenue
Carlsbad, CA 92008
P: 760.438.8400

SPECIFICATIONS
TOPFLIGHT SPECS
49 Geary Street, Suite 230
San Francisco, CA 94108-5748
P: 415.546.6033

REVISION

NUMBER	DATE	DESCRIPTION

ISSUE:
100% DESIGN DEVELOPMENT

DATE:
APRIL 30, 2022

STAMP:

NOT FOR CONSTRUCTION

SHEET TITLE:
ENLARGED PLANS & INTERIOR ELEVATIONS - RESTROOMS

SHEET NUMBER:
A403

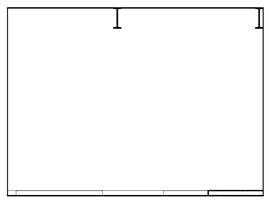

13 ELECTRICAL/TELECOM 114 - WEST
1/4" = 1'-0"

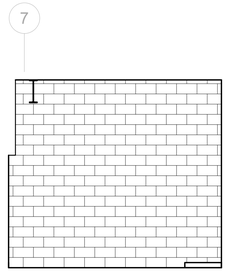

12 ELECTRICAL/TELECOM 114 - SOUTH
1/4" = 1'-0"

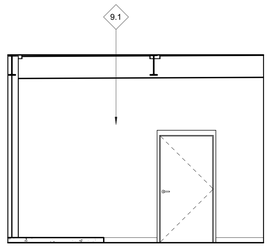

11 ELECTRICAL/TELECOM 114 - EAST
1/4" = 1'-0"

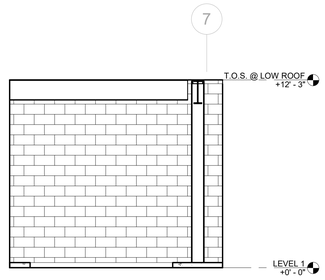

10 ELECTRICAL/TELECOM 114 - NORTH
1/4" = 1'-0"

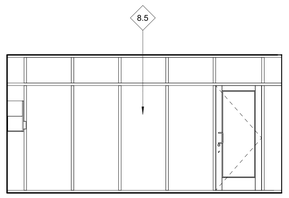

9 POOL OFFICE 102 - WEST
1/4" = 1'-0"

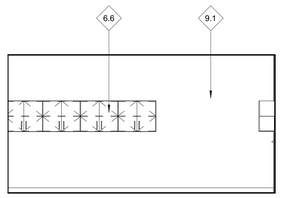

8 POOL OFFICE 102 - EAST
1/4" = 1'-0"

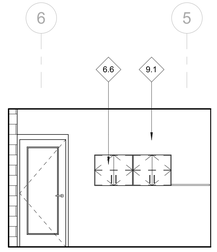

7 POOL OFFICE 102 - SOUTH
1/4" = 1'-0"

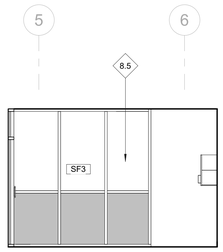

6 POOL OFFICE 102 - NORTH
1/4" = 1'-0"

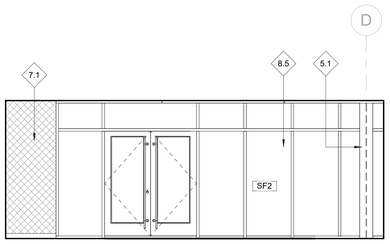

5 LOBBY 101 - WEST
1/4" = 1'-0"

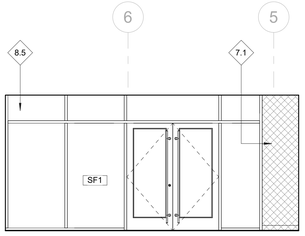

4 LOBBY 101 - SOUTH
1/4" = 1'-0"

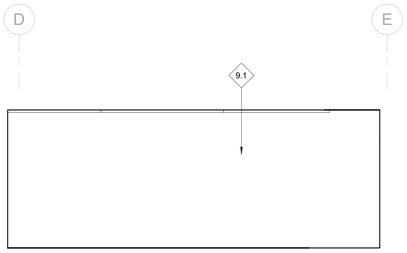

3 LOBBY 101 - EAST
1/4" = 1'-0"

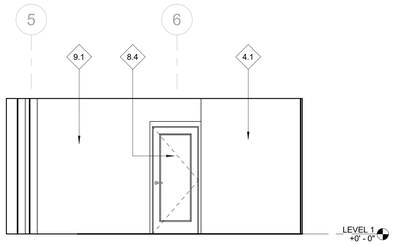

2 LOBBY 101 - NORTH
1/4" = 1'-0"

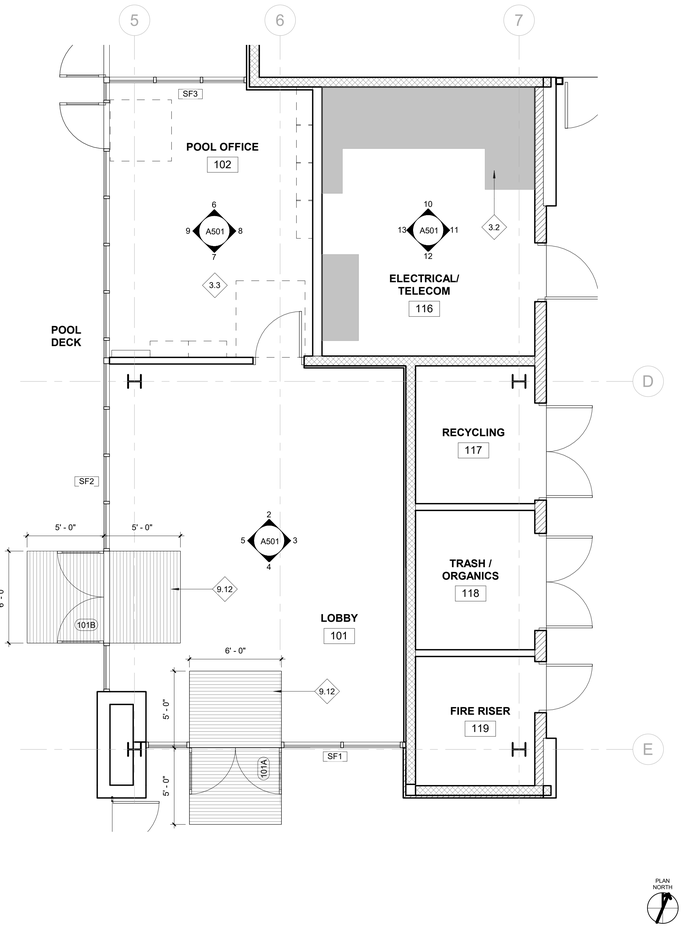

1 ENLARGED PLAN - LOBBY AND OFFICE
1/4" = 1'-0"

LEGEND

	METAL STUD FRAMING
	CMU WALL
101	DOOR / GATE NUMBER
SF#	STOREFRONT KEY

KEYNOTES

#	DESCRIPTION
3.2	CAST-IN-PLACE CONCRETE CURB
3.3	POLISHED CONCRETE FLOOR FINISH
4.1	CONCRETE MASONRY BLOCK (GROUND FACE WHERE EXPOSED)
5.1	STRUCTURE, S.S.D., PAINTED
6.6	CUSTOM CASEWORK
7.1	SLATE SHINGLE CLADDING
8.4	GLAZED ALUMINUM ENTRANCE DOORS
8.5	ALUMINUM FRAMED STOREFRONT SYSTEM
9.1	GYP. BD., PAINTED - WATER RESISTANT AT WET LOCATIONS
9.12	RECESSED WALK OFF MAT

GENERAL NOTES

1. FFE: +0' - 0" = +297.00
2. ALL EXPOSED C.I.P. CONC. TO RECEIVE WATERPROOF & ANTI-GRAFFITI COATING.
3. AUTOMATIC FIRE SPRINKLER SYSTEM THROUGHOUT BUILDING. SPRINKLERS SHALL BE DESIGNED TO COORDINATE WITH DUCTS, PIPING, CONDUIT, LIGHTING, ACCESS PANEL LOCATIONS AND OTHER CEILING ELEMENTS FOR A CLEAN, ARCHITECTURAL APPEARANCE.

els architecture+ urban design
2040 Addison St, Berkeley, CA 94704
510.549.2929 | elsarch.com

PROJECT:

PIEDMONT COMMUNITY POOL
777 MAGNOLIA AVENUE
PIEDMONT, CA 94611

CLIENT:
CITY OF PIEDMONT
120 VISTA AVENUE PIEDMONT, CA 94611

PROJECT TEAM:

ARCHITECT:
ELS ARCHITECTURE AND URBAN DESIGN
2040 Addison Street
Berkeley, CA 94704
P: 510.549.2929

CIVIL ENGINEER:
BKF ENGINEERS
4670 Willow Road, Suite 250
Pleasanton, CA 94588
P: (925) 396-7704

LANDSCAPE ARCHITECT:
SWA
2200 Bridgeway
Sausalito, CA 94965
P: 415.332.5100

STRUCTURAL ENGINEER:
FORELL/ELSESSER ENGINEERS, INC.
160 Pine Street, 6th Floor
San Francisco, CA 94111
P: 415.837.0700

MEP / FIRE PROTECTION:
GUTTMANN & BLAEVOET
1620 Montgomery Street, Suite 230
San Francisco, CA 94111
P: 415.655.4000

AQUATICS:
AQUATICS DESIGN GROUP
2226 Faraday Avenue
Carlsbad, CA 92008
P: 760.438.8400

SPECIFICATIONS
TOPFLIGHT SPECS
49 Geary Street, Suite 230
San Francisco, CA 94108-5748
P: 415.546.6033

REVISION

NUMBER	DATE	DESCRIPTION

ISSUE:
100% DESIGN DEVELOPMENT

DATE:
APRIL 30, 2022

STAMP:
NOT FOR CONSTRUCTION

SHEET TITLE:
ENLARGED PLANS & INTERIOR ELEVATIONS

SHEET NUMBER:
A501

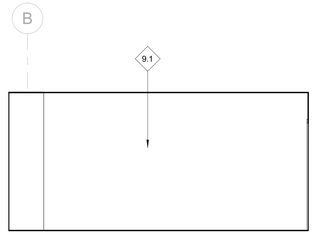

18 PARTY ROOM 113 - WEST
1/4" = 1'-0"

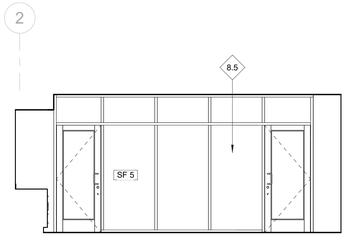

17 PARTY ROOM 113 - SOUTH
1/4" = 1'-0"

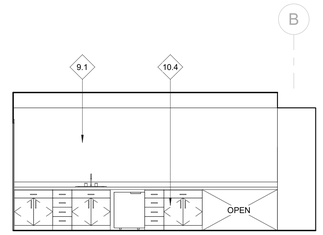

16 PARTY ROOM 113 - EAST
1/4" = 1'-0"

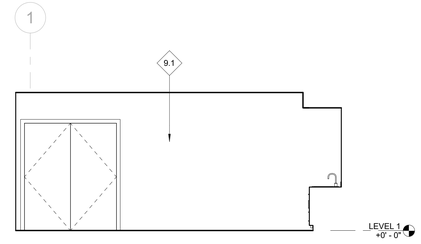

15 PARTY ROOM 113 - NORTH
1/4" = 1'-0"

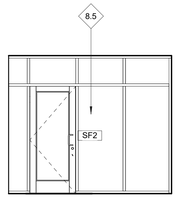

14 LIFE GUARD 105 - WEST
1/4" = 1'-0"

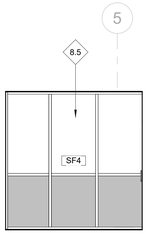

13 LIFE GUARD 105 - SOUTH
1/4" = 1'-0"

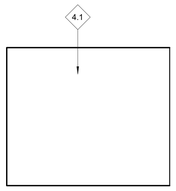

12 LIFE GUARD 105 - EAST
1/4" = 1'-0"

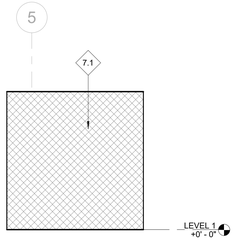

11 LIFE GUARD 105 - NORTH
1/4" = 1'-0"

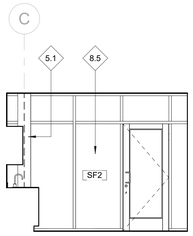

10 FIRST AID 104 - WEST
1/4" = 1'-0"

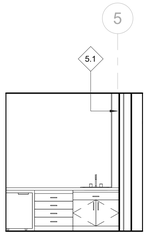

9 FIRST AID 104 - SOUTH
1/4" = 1'-0"

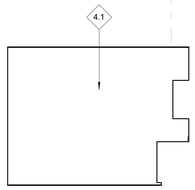

8 FIRST AID 104 - EAST
1/4" = 1'-0"

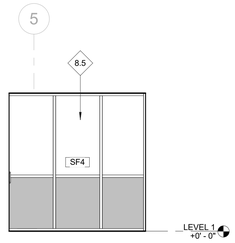

7 FIRST AID 104 - NORTH
1/4" = 1'-0"

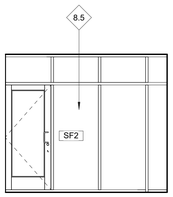

6 JUICE BAR 103 - WEST
1/4" = 1'-0"

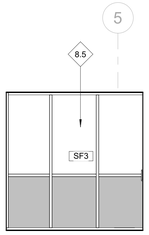

5 JUICE BAR 103 - SOUTH
1/4" = 1'-0"

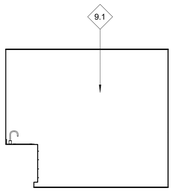

4 JUICE BAR 103 - EAST
1/4" = 1'-0"

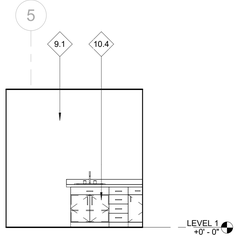

3 JUICE BAR 103 - NORTH
1/4" = 1'-0"

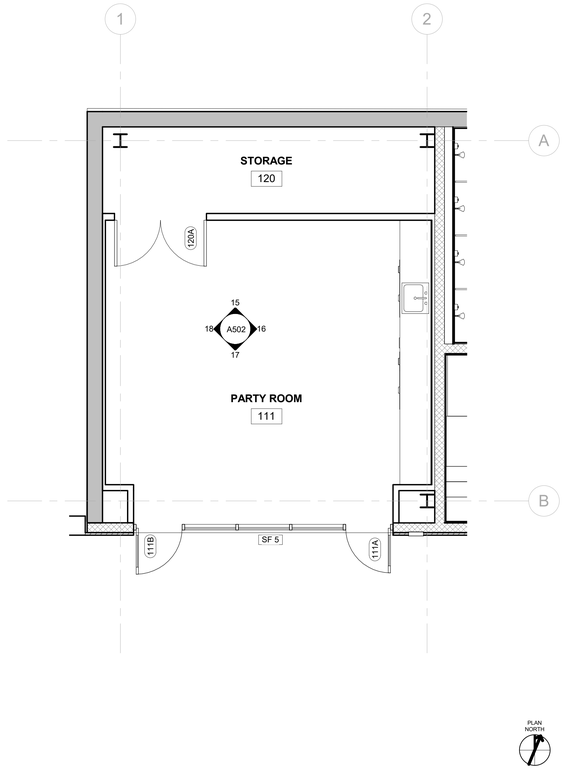

2 ENLARGED PLAN - PARTY ROOM 113 - ADD ALTERNATE
1/4" = 1'-0"

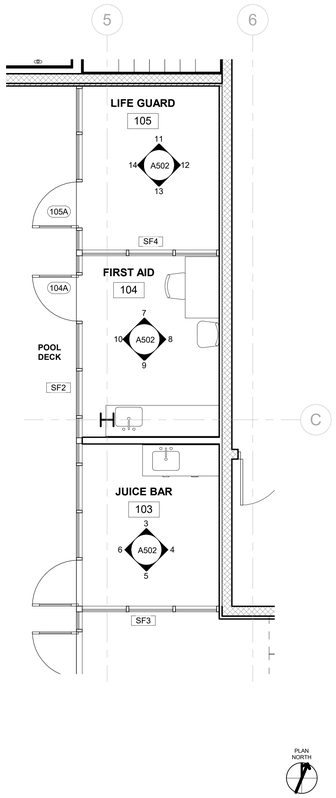

1 ENLARGED PLAN - ROOMS 103, 104, 105
1/4" = 1'-0"

LEGEND

- METAL STUD FRAMING
- CMU WALL
- 101 DOOR / GATE NUMBER
- SF# STOREFRONT KEY

KEYNOTES

#	DESCRIPTION
4.1	CONCRETE MASONRY BLOCK (GROUND FACE WHERE EXPOSED)
5.1	STRUCTURE, S.S.D., PAINTED
7.1	SLATE SHINGLE CLADDING
8.5	ALUMINUM FRAMED STOREFRONT SYSTEM
9.1	GYP. BD., PAINTED - WATER RESISTANT AT WET LOCATIONS
10.4	CUSTOM CABINETS

GENERAL NOTES

1. FFE: +0' - 0" = +297.00
2. ALL EXPOSED C.I.P. CONC. TO RECEIVE WATERPROOF & ANTI-GRAFFITI COATING.
3. AUTOMATIC FIRE SPRINKLER SYSTEM THROUGHOUT BUILDING. SPRINKLERS SHALL BE DESIGNED TO COORDINATE WITH DUCTS, PIPING, CONDUIT, LIGHTING, ACCESS PANEL LOCATIONS AND OTHER CEILING ELEMENTS FOR A CLEAN, ARCHITECTURAL APPEARANCE.

els architecture+ urban design
2040 Addison St, Berkeley, CA 94704
510.549.2929 | elsarch.com

PROJECT:

PIEDMONT COMMUNITY POOL
777 MAGNOLIA AVENUE
PIEDMONT, CA 94611

CLIENT:

CITY OF PIEDMONT
120 VISTA AVENUE PIEDMONT, CA 94611

PROJECT TEAM:

ARCHITECT:
ELS ARCHITECTURE AND URBAN DESIGN
2040 Addison Street
Berkeley, CA 94704
P: 510.549.2929

CIVIL ENGINEER:
BKF ENGINEERS
4670 Willow Road, Suite 250
Pleasanton, CA 94588
P: (925) 396-7704

LANDSCAPE ARCHITECT:
SWA
2200 Bridgeway
Sausalito, CA 94965
P: 415.332.5100

STRUCTURAL ENGINEER:
FORELL/ELSESSER ENGINEERS, INC.
160 Pine Street, 6th Floor
San Francisco, CA 94111
P: 415.837.0700

MEP / FIRE PROTECTION:
GUTTMANN & BLAEVOET
1620 Montgomery Street, Suite 230
San Francisco, CA 94111
P: 415.655.4000

AQUATICS:
AQUATICS DESIGN GROUP
2226 Faraday Avenue
Carlsbad, CA 92008
P: 760.438.8400

SPECIFICATIONS
TOPFLIGHT SPECS
49 Geary Street, Suite 230
San Francisco, CA 94108-5748
P: 415.546.6033

REVISION

NUMBER	DATE	DESCRIPTION

ISSUE:
100% DESIGN DEVELOPMENT

DATE:
APRIL 30, 2022

STAMP:

NOT FOR CONSTRUCTION

SHEET TITLE:

ENLARGED PLANS & INTERIOR ELEVATIONS

SHEET NUMBER:

A502

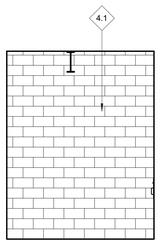

16 MECH VESTIBULE 114 - WEST
1/4" = 1'-0"

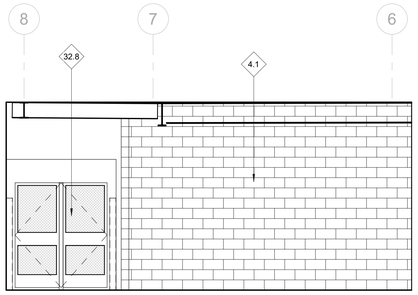

15 MECH VESTIBULE 114 - SOUTH
1/4" = 1'-0"

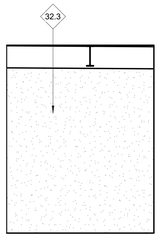

14 MECH VESTIBULE 114 - EAST
1/4" = 1'-0"

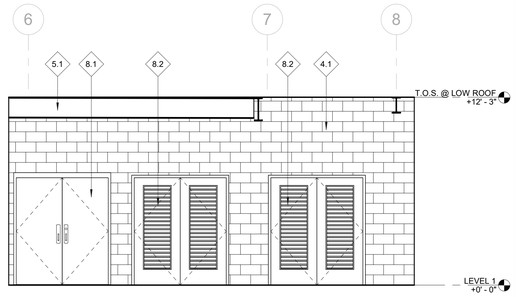

13 MECH VESTIBULE 114 - NORTH
1/4" = 1'-0"

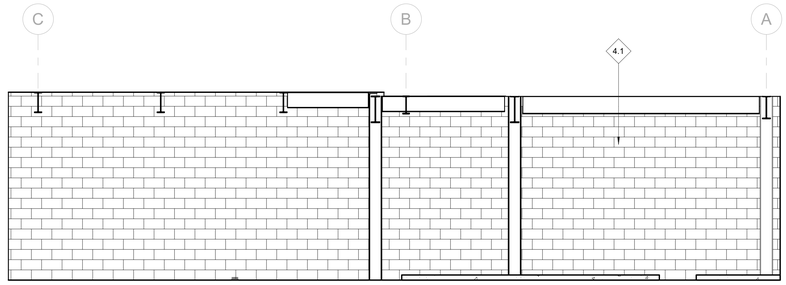

12 POOL MECH. - WEST
1/4" = 1'-0"

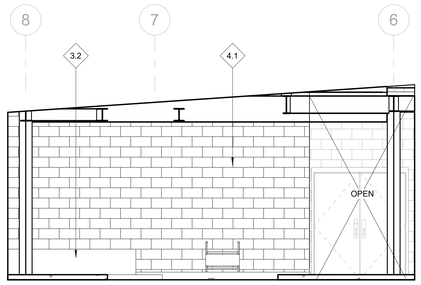

11 POOL MECH. - SOUTH
1/4" = 1'-0"

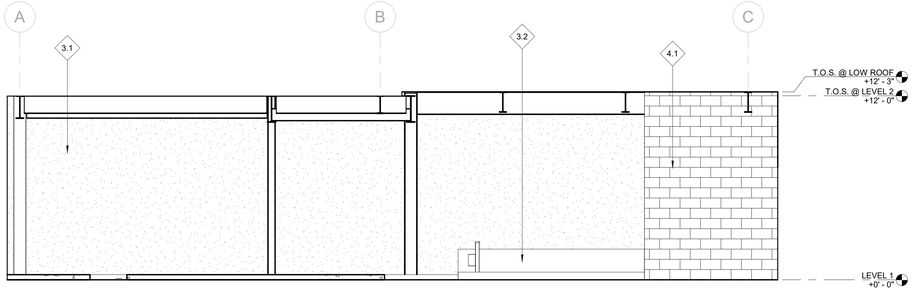

10 POOL MECH. - EAST
1/4" = 1'-0"

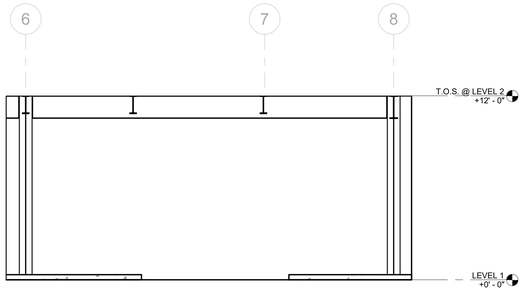

9 POOL MECH. - NORTH
1/4" = 1'-0"

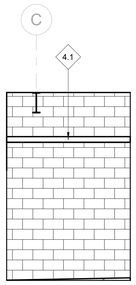

8 CHLORINE - WEST
1/4" = 1'-0"

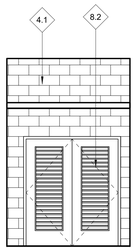

7 CHLORINE - SOUTH
1/4" = 1'-0"

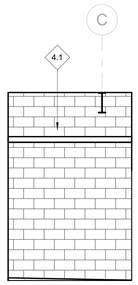

6 CHLORINE - EAST
1/4" = 1'-0"

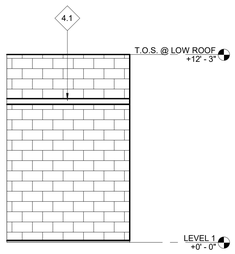

5 CHLORINE - NORTH
1/4" = 1'-0"

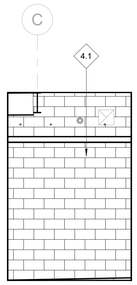

4 ACID - WEST
1/4" = 1'-0"

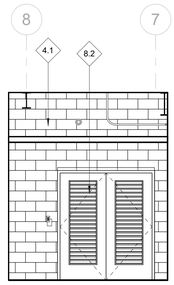

3 ACID - SOUTH
1/4" = 1'-0"

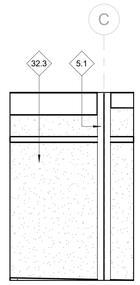

2 ACID - EAST
1/4" = 1'-0"

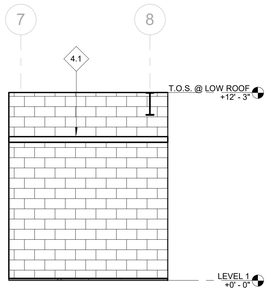

1 ACID - NORTH
1/4" = 1'-0"

KEYNOTES

#	DESCRIPTION
3.1	CAST-IN-PLACE CONCRETE, S.S.D.
3.2	CAST-IN-PLACE CONCRETE CURB
4.1	CONCRETE MASONRY BLOCK (GROUND FACE WHERE EXPOSED)
5.1	STRUCTURE, S.S.D., PAINTED
8.1	HOLLOW METAL DOORS, PAINTED
8.2	HOLLOW METAL DOORS WITH FIRE RESISTANT LOUVERS AND SCREEN PER MFR., PAINTED
32.3	CAST-IN-PLACE CONCRETE RETAINING WALL, S.S.D.
32.8	SWING GATE, VINYL COATED CHAIN LINK INFILL

GENERAL NOTES

1. FFE: +0' - 0" = +297.00
2. ALL EXPOSED C.I.P. CONC. TO RECEIVE WATERPROOF & ANTI-GRAFFITI COATING.
3. AUTOMATIC FIRE SPRINKLER SYSTEM THROUGHOUT BUILDING. SPRINKLERS SHALL BE DESIGNED TO COORDINATE WITH DUCTS, PIPING, CONDUIT, LIGHTING, ACCESS PANEL LOCATIONS AND OTHER CEILING ELEMENTS FOR A CLEAN, ARCHITECTURAL APPEARANCE.

els architecture+ urban design
2040 Addison St, Berkeley, CA 94704
510.549.2929 | elsarch.com

PROJECT:

PIEDMONT COMMUNITY POOL
777 MAGNOLIA AVENUE
PIEDMONT, CA 94611

CLIENT:
CITY OF PIEDMONT
120 VISTA AVENUE PIEDMONT, CA 94611

PROJECT TEAM:

ARCHITECT:
ELS ARCHITECTURE AND URBAN DESIGN
2040 Addison Street
Berkeley, CA 94704
P: 510.549.2929

CIVIL ENGINEER:
BKF ENGINEERS
4670 Willow Road, Suite 250
Pleasanton, CA 94588
P: (925) 396-7704

LANDSCAPE ARCHITECT:
SWA
2200 Bridgeway
Sausalito, CA 94965
P: 415.332.5100

STRUCTURAL ENGINEER:
FORELL/ELSESSER ENGINEERS, INC.
160 Pine Street, 6th Floor
San Francisco, CA 94111
P: 415.837.0700

MEP / FIRE PROTECTION:
GUTTMANN & BLAEVOET
1620 Montgomery Street, Suite 230
San Francisco, CA 94111
P: 415.655.4000

AQUATICS:
AQUATICS DESIGN GROUP
2226 Faraday Avenue
Carlsbad, CA 92008
P: 760.438.8400

SPECIFICATIONS
TOPFLIGHT SPECS
49 Geary Street, Suite 230
San Francisco, CA 94108-5748
P: 415.546.6033

REVISION

NUMBER	DATE	DESCRIPTION

ISSUE:
100% DESIGN DEVELOPMENT

DATE:
APRIL 30, 2022

STAMP:
NOT FOR CONSTRUCTION

SHEET TITLE:
ENLARGED PLANS & INTERIOR ELEVATIONS

SHEET NUMBER:
A503

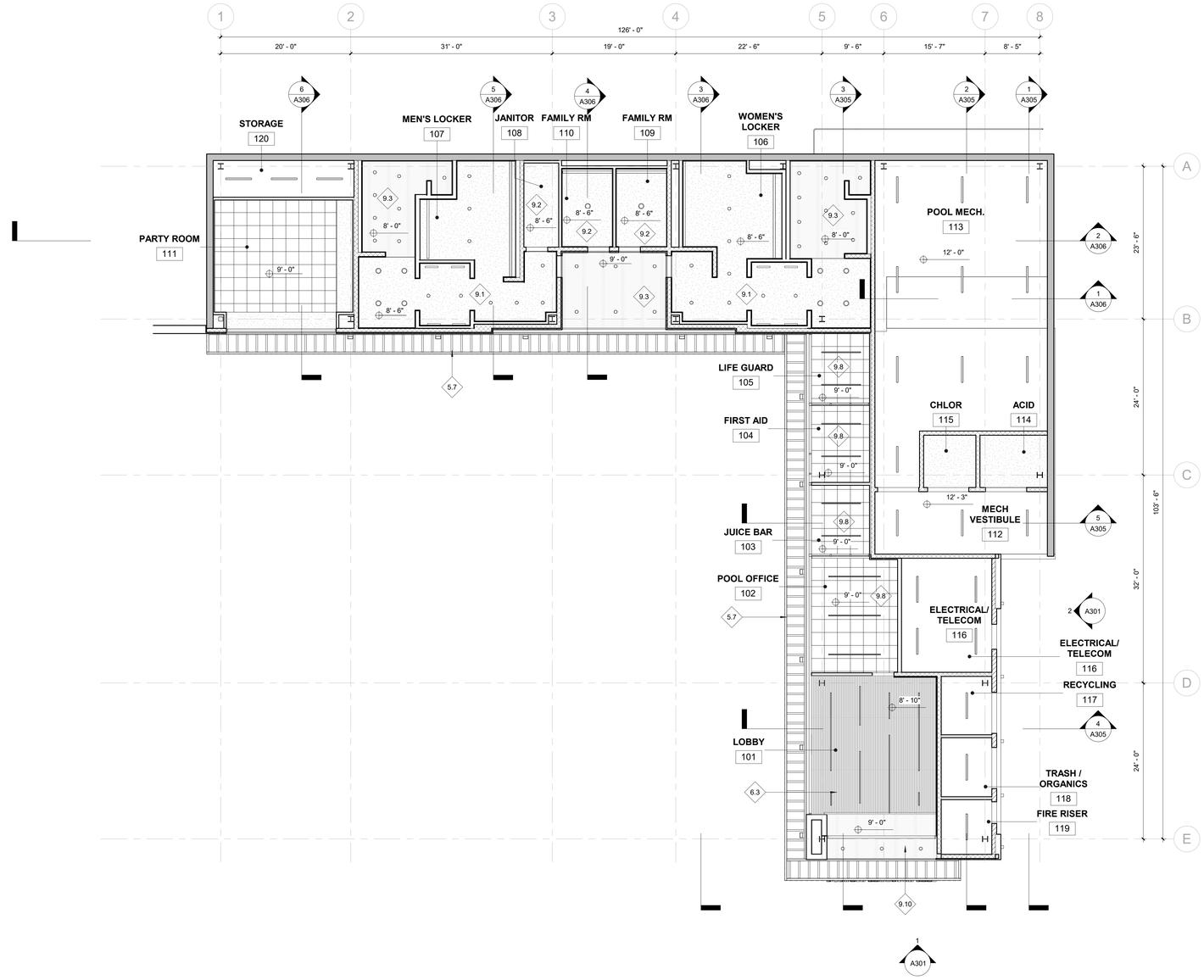

1 REFLECTED CEILING PLAN LEVEL 1
1/8" = 1'-0"

PLAN NORTH

LIGHTING FIXTURE TYPE LEGEND

- SUSPENDED LINEAR LIGHT
- SUSPENDED FEATURE LIGHT
- RECESSED LINEAR LIGHT
- RECESSED DOWNLIGHT
- SURFACE-MOUNTED UNDERCABINET LIGHT
- WALL-MOUNTED VANITY LIGHT
- 2x2 RECESSED LIGHT

MECHANICAL TYPE LEGEND

- SUPPLY DIFFUSER
- EXHAUST DIFFUSER
- REMOVABLE PORTION OF LINEAR WOOD FOR CEILING ACCESS
- RETURN DIFFUSER
- ACCESS PANEL

KEYNOTES

#	DESCRIPTION
5.7	METAL TRELLIS, PAINTED
6.3	COMPOSITE WOOD SLAT CEILING / SOFFIT CLADDING
9.1	GYP. BD., PAINTED - WATER RESISTANT AT WET LOCATIONS
9.2	FRAMED GYP. BD. CEILING, PAINTED
9.3	FRAMED CEMENT PLASTER CEILING SYSTEM AT WET LOCATIONS, PAINTED
9.8	ACOUSTICAL CEILING TILE
9.10	CEMENT PLASTER, PAINTED

GENERAL NOTES

1. FFE: +0' - 0" = +297.00
2. ALL EXPOSED C.I.P. CONC. TO RECEIVE WATERPROOF & ANTI-GRAFFITI COATING.
3. AUTOMATIC FIRE SPRINKLER SYSTEM THROUGHOUT BUILDING. SPRINKLERS SHALL BE DESIGNED TO COORDINATE WITH DUCTS, PIPING, CONDUIT, LIGHTING, ACCESS PANEL LOCATIONS AND OTHER CEILING ELEMENTS FOR A CLEAN, ARCHITECTURAL APPEARANCE.

els architecture+ urban design
2040 Addison St, Berkeley, CA 94704
510.549.2929 | elsarch.com

PROJECT:

PIEDMONT COMMUNITY POOL
777 MAGNOLIA AVENUE
PIEDMONT, CA 94611

CLIENT:

CITY OF PIEDMONT
120 VISTA AVENUE PIEDMONT, CA 94611

PROJECT TEAM:

ARCHITECT:
ELS ARCHITECTURE AND URBAN DESIGN
2040 Addison Street
Berkeley, CA 94704
P: 510.549.2929

CIVIL ENGINEER:
BKF ENGINEERS
4670 Willow Road, Suite 250
Pleasanton, CA 94588
P: (925) 396-7704

LANDSCAPE ARCHITECT:
SWA
2200 Bridgeway
Sausalito, CA 94965
P: 415.332.5100

STRUCTURAL ENGINEER:
FORELL/ELSESSER ENGINEERS, INC.
160 Pine Street, 6th Floor
San Francisco, CA 94111
P: 415.837.0700

MEP / FIRE PROTECTION:
GUTTMANN & BLAEVOET
1620 Montgomery Street, Suite 230
San Francisco, CA 94111
P: 415.655.4000

AQUATICS:
AQUATICS DESIGN GROUP
2226 Faraday Avenue
Carlsbad, CA 92008
P: 760.438.8400

SPECIFICATIONS
TOPFLIGHT SPECS
49 Geary Street, Suite 230
San Francisco, CA 94108-5748
P: 415.546.6033

REVISION

NUMBER	DATE	DESCRIPTION

ISSUE:
100% DESIGN DEVELOPMENT

DATE:
APRIL 30, 2022

STAMP:

NOT FOR CONSTRUCTION

SHEET TITLE:
REFLECTED CEILING PLAN LEVEL 1

SHEET NUMBER:
A601

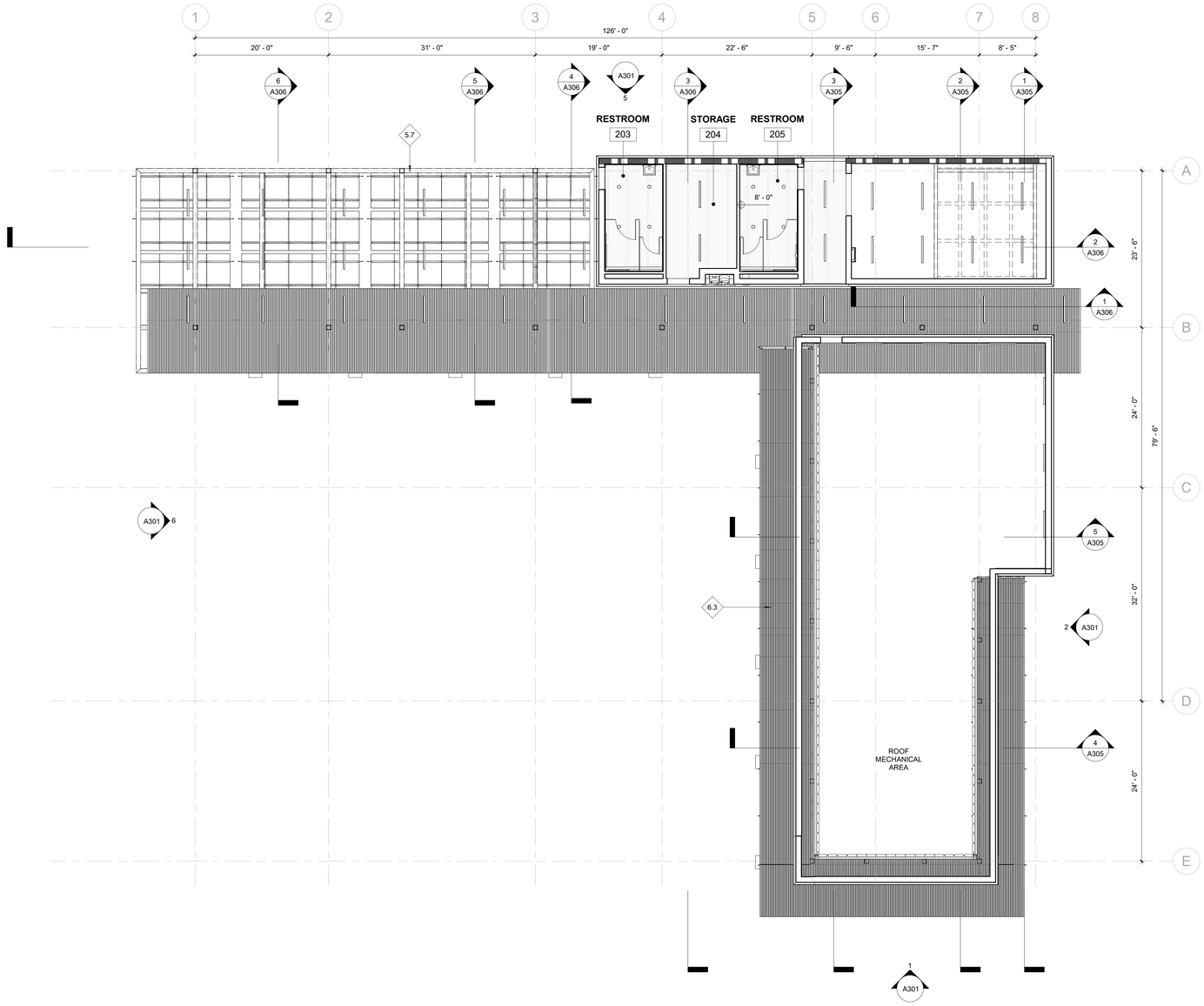

1 REFLECTED CEILING PLAN LEVEL 2
1/8" = 1'-0"

PLAN NORTH

LIGHTING FIXTURE TYPE LEGEND

- SUSPENDED LINEAR LIGHT
- SUSPENDED FEATURE LIGHT
- RECESSED LINEAR LIGHT
- RECESSED DOWNLIGHT
- SURFACE-MOUNTED UNDERCABINET LIGHT
- WALL-MOUNTED VANITY LIGHT
- 2x2 RECESSED LIGHT

MECHANICAL TYPE LEGEND

- SUPPLY DIFFUSER
- EXHAUST DIFFUSER
- REMOVABLE PORTION OF LINEAR WOOD FOR CEILING ACCESS
- RETURN DIFFUSER
- ACCESS PANEL

KEYNOTES

#	DESCRIPTION
5.7	METAL TRELLIS, PAINTED
6.3	COMPOSITE WOOD SLAT CEILING / SOFFIT CLADDING

GENERAL NOTES

1. FFE: +0' - 0" = +297.00
2. ALL EXPOSED C.I.P. CONC. TO RECEIVE WATERPROOF & ANTI-GRAFFITI COATING.
3. AUTOMATIC FIRE SPRINKLER SYSTEM THROUGHOUT BUILDING. SPRINKLERS SHALL BE DESIGNED TO COORDINATE WITH DUCTS, PIPING, CONDUIT, LIGHTING, ACCESS PANEL LOCATIONS AND OTHER CEILING ELEMENTS FOR A CLEAN, ARCHITECTURAL APPEARANCE.

els architecture+ urban design
2040 Addison St, Berkeley, CA 94704
510.549.2929 | elsarch.com

PROJECT:

PIEDMONT COMMUNITY POOL
777 MAGNOLIA AVENUE
PIEDMONT, CA 94611

CLIENT:

CITY OF PIEDMONT
120 VISTA AVENUE PIEDMONT, CA 94611

PROJECT TEAM:

ARCHITECT:
ELS ARCHITECTURE AND URBAN DESIGN
2040 Addison Street
Berkeley, CA 94704
P: 510.549.2929

CIVIL ENGINEER:
BKF ENGINEERS
4670 Willow Road, Suite 250
Pleasanton, CA 94588
P: (925) 396-7704

LANDSCAPE ARCHITECT:
SWA
2200 Bridgeway
Sausalito, CA 94965
P: 415.332.5100

STRUCTURAL ENGINEER:
FORELL/ELSESSER ENGINEERS, INC.
160 Pine Street, 6th Floor
San Francisco, CA 94111
P: 415.837.0700

MEP / FIRE PROTECTION:
GUTTMANN & BLAEVOET
1620 Montgomery Street, Suite 230
San Francisco, CA 94111
P: 415.655.4000

AQUATICS:
AQUATICS DESIGN GROUP
2226 Faraday Avenue
Carlsbad, CA 92008
P: 760.438.8400

SPECIFICATIONS
TOPFLIGHT SPECS
49 Geary Street, Suite 230
San Francisco, CA 94108-5748
P: 415.546.6033

REVISION

NUMBER	DATE	DESCRIPTION

ISSUE:
100% DESIGN DEVELOPMENT

DATE:
APRIL 30, 2022

STAMP:

NOT FOR CONSTRUCTION

SHEET TITLE:
REFLECTED CEILING PLAN LEVEL 2

SHEET NUMBER:
A602

DOOR SCHEDULE

DOOR #	ROOM / AREA NAME	OPENING DOOR SIZE			FIRE RATING	DOOR			FRAME		DETAILS			HDWR GROUP	Sign Type	COMMENTS
		WIDTH	HEIGHT	THICKNESS		TYPE	MATERIAL	FINISH	MATL	FIN	HEAD	JAMB	SILL			
101A	LOBBY	6' - 0"	7' - 0"	1 3/4"		BB	ALUM. & GLASS	MATCH STOR.	ALUM. STOR.	MATCH STOR.	20/A813	18/A813	1/A813	01	C, G	CARD READER, AUTO OPERATOR
101B	LOBBY	6' - 0"	6' - 10"	1 3/4"		BB	ALUM. & GLASS	MATCH STOR.	ALUM. STOR.	MATCH STOR.	20/A813	18/A813	1/A813	01	C, G	CARD READER, AUTO OPERATOR
102A	LOBBY	3' - 0"	7' - 0"	1 3/4"		B	WD & GLASS	VENEER	HM	PTD						
102B	POOL OFFICE	3' - 0"	6' - 10"	2"												
103A	JUICE BAR	3' - 0"	6' - 10"	2"		B	ALUM. & GLASS	MATCH STOR.	ALUM. STOR.	MATCH STOR.						
104A	FIRST AID	3' - 0"	7' - 0"	2"		B	ALUM. & GLASS	MATCH STOR.	ALUM. STOR.	MATCH STOR.						
105A	LIFE GUARD	3' - 0"	7' - 0"	2"		B	ALUM. & GLASS	MATCH STOR.	ALUM. STOR.	MATCH STOR.						
106A	WOMEN'S LOCKER	3' - 0"	7' - 0"	1 3/4"		A	HM	PTD	HM	PTD						
107A	MEN'S LOCKER	3' - 0"	7' - 0"	1 3/4"		A	HM	PTD	HM	PTD						
108A	MEN'S LOCKER	3' - 0"	7' - 0"	1 3/4"		A	HM	PTD	HM	PTD						
109A	FAMILY RM	3' - 0"	7' - 0"	1 3/4"		A	HM	PTD	HM	PTD						
110A	FAMILY RM	3' - 0"	7' - 0"	1 3/4"		A	HM	PTD	HM	PTD						
111A	PARTY ROOM	2' - 11"	7' - 0"	2"		B	ALUM. & GLASS	MATCH STOR.	ALUM. STOR.	MATCH STOR.						
111B	PARTY ROOM	3' - 0"	7' - 0"	2"		B	ALUM. & GLASS	MATCH STOR.	ALUM. STOR.	MATCH STOR.						
113A	POOL MECH.	6' - 0"	7' - 0"	1 3/4"		AA	HM	PTD	HM	PTD						
114A	ACID	6' - 0"	7' - 0"	2"		DD	FRP	-	HM	PTD						
115A	CHLOR	6' - 0"	7' - 0"	2"		DD	FRP	-	HM	PTD						
116A	ELECTRICAL/ TELECOM	3' - 6"	7' - 0"	1 3/4"		AA	HM	PTD	HM	PTD						
117A	RECYCLING	6' - 0"	7' - 0"	1 3/4"		AA	HM	PTD	HM	PTD						
118A	TRASH / ORGANICS	6' - 0"	7' - 0"	1 3/4"		AA	HM	PTD	HM	PTD						
119A	FIRE RISER	3' - 0"	7' - 0"	1 3/4"		A	HM	PTD	HM	PTD						
120A	STORAGE	6' - 0"	7' - 0"	2"		AA	HM	PTD	HM	PTD						
201A	ROOF MECH	6' - 0"	7' - 0"	1 3/4"		AA	HM	PTD	HM	PTD						
202A	ROOF AREA	3' - 0"	6' - 0"	1 3/4"												
204A	RESTROOM	3' - 0"	7' - 0"	1 3/4"		A	HM	PTD	HM	PTD						
205A	STORAGE	3' - 0"	7' - 0"	1 3/4"												
206A	RESTROOM	3' - 0"	7' - 0"	1 3/4"		A	HM	PTD	HM	PTD						

GATE SCHEDULE

DOOR #	ROOM/AREA NAME	OPENING DOOR SIZE			FIRE RATING	DOOR			FRAME		DETAILS			HDWR GROUP	Sign Type	COMMENTS
		WIDTH	HEIGHT	THICKNESS		TYPE	MATERIAL	FINISH	MATL	FIN	HEAD	JAMB	SILL			
G01	POOL DECK	6' - 0"	7' - 0"	2"												
G02	POOL DECK	5' - 0"	6' - 8"	1 3/4"												
G03	POOL DECK	6' - 0"	4' - 4"	1 3/4"												
G04	MECH VESTIBULE	6' - 0"	7' - 0"	2"			STL	PTD						13	G, H	SEE 3,4,5/- FOR ELEVATIONS AND SECTIONS
G05	POOL STORAGE	14' - 0"	7' - 0"	4 11/16"												
G06	POOL STORAGE	17' - 0"	7' - 1"	4 11/16"												

DOOR TYPE LEGEND

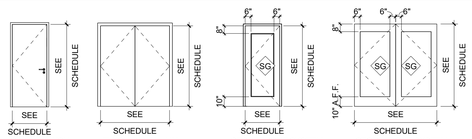

SINGLE FLUSH PANEL - HM — A SINGLE

FLUSH PANEL - HM — AA DOUBLE

STOREFRONT SYSTEM — B SINGLE

STOREFRONT SYSTEM — BB DOUBLE

DOOR FRAME LEGEND

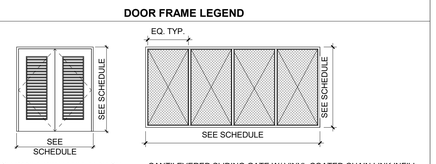

FLUSH PANEL WITH FULL LENTGH LOUVER - HM — CC DOUBLE

CANTILEVERED SLIDING GATE W/ VINYL COATED CHAIN LINK INFILL — F

NOTES

SLIDING / FOLDING GLASS PARTITION - C

SG -SAFETY GLASS PER CBC 2406.4

DOOR SCHEDULE NOTES

1. GENERAL CONTRACTOR TO VERIFY IN FIELD ACTUAL DOOR HEIGHT TO PROPERLY SIZE DOOR OPENING

2. ALL DOORS SHALL BE TRIMMED ½"MINIMUM CLEARANCE BETWEEN FLOOR FINISH TO ALLOW FOR FULL DOOR SWING

3. EXIT DOORS SHALL BE OPERABLE FROM THE INTERIOR WITHOUT USE OF ANY SPECIAL KNOWLEDGE /EFFORT OR KEY.

4. THE CLEAR MINIMUM WIDTH OF EACH DOOR OPENING SHALL NOT BE LESS THAN 32 INCHES. THE HEIGHT OF DOORS SHALL NOT BE LESS THAN 80 INCHES.

5. PROJECTIONS INTO THE CLEAR OPENING WIDTH BETWEEN 34 INCHES AND 80 INCHES ABOVE THE FLOOR OR GROUND SHALL NOT EXCEED 4 INCHES

6. THERE SHALL BE NO PROJECTIONS INTO THE REQUIRED CLEAR OPENING WIDTH LOWER THAN 34 INCHES ABOVE THE FLOOR OR GROUND.

7. DOOR HANDLES, PULLS, LATCHES, LOCKS AND OTHER OPERATING DEVICES SHALL BE INSTALLED 34 INCHES MIMIMUM TO 44 INCHES MAXIMUM ABOVE THE FINISHED FLOOR AS PER CBC 11B-404.2.7.

8. DOOR HARDWARE ARE OPERABLE WITH ONE HAND AND DO NOT REQUIRE TIGHT GRASPING, PINCHING, OR TWISTING OF THE HAND. CBC 11B-404.2.7 AND 11B-309.4

9. DOOR THRESHOLDS COMPLY WITH CBC 11B-404.2.5

10. LOWER 10 INCH OF THE DOOR SURFACE IS PROVIDED WITH A SMOOTH SURFACE FOR THE FULL WIDTH OF THE DOOR, AT THE PUSH SIDE OF THE DOOR PER CBC 11B-404.2.10.

11. DOORS WITH VISION PANELS SHALL HAVE THE BOTTOM OF THE VISION PANEL IN THE DOOR TO BE 43" MAXIMUM ABOVE THE FINISH FLOOR PER CBC 11B-404.2.11.

12. SAFETY GLAZING MUST BE PROVIDED AT HAZARDOUS LOCATIONS PER CBC 2406.4 INLCLUDING, BUT NOT LIMITED TO, GLAZING WITHIN 18 INCHES OF A WALKING SURFACE, GLAZING IN DOORS, AND WINDOWS ADJACENT TO DOORS.

DOOR SCHEDULE KEY

HM = HOLLOW METAL
PTD = PAINTED
T = TEMPERED GLASS
CR = CARD READER

ROOM FINISH SCHEDULE

ROOM NUMBER	ROOM NAME	FLOOR FINISH	BASE FINISH	WALL FINISH	CEILING FINISH	CEILING HEIGHT	COMMENTS
101	LOBBY	F1, F5	B1	W1, W4, W7, W8	C1, C4		
102	POOL OFFICE	F3	B1				
103	JUICE BAR	F1	B1	W1, W4, W7	C2		
104	FIRST AID	F1	B1	W1, W4	C2		
105	LIFE GUARD	F1	B1	W1, W4	C2		
106	WOMEN'S LOCKER	F4	B2	W2	C1, C3 (AT SHOWER AREAS)		
107	MEN'S LOCKER	F4	B2	W2	C1, C3 (AT SHOWER AREAS)		
108	JANITOR						
109	FAMILY RM	F4	B2	W2	C3		
110	FAMILY RM	F4	B2	W2	C3		
111	PARTY ROOM	F3	B1	W1, W5	C4		
112	MECH VESTIBULE				C6		
113	POOL MECH.	F2	B3	W3	C6		
114	ACID	F2	B3	W3	C6		
115	CHLOR	F2	B3	W3	C6		
116	ELECTRICAL/ TELECOM		B3		C6		
117	RECYCLING				C6		
118	TRASH / ORGANICS				C6		
119	FIRE RISER				C6		
120	STORAGE						
203	RESTROOM	F4	B2	W1, W4, W5, W9	C5		
204	STORAGE	F4	B2				
205	RESTROOM	F4	B2	W2	C1		

FINISH SCHEDULE KEY

TAG	DESCRIPTION
	FLOOR
F1	POLISHED CONCRETE FLOOR FINISH
F2	SEALED CONCRETE FLOOR FINISH
F3	CARPET
F4	RESINOUS EPOXY FLOORING WITH COARSE AGGREGATE
F5	RECESSED WALK OFF MAT
	BASE
B1	RUBBER
B2	RESINOUS EPOXY
B3	NONE
	WALL
W1	GYP. BD., PAINTED - WATER RESISTANT AT WET LOCATIONS
W2	CERAMIC WALL TILE
W3	CONCRETE MASONRY BLOCK
W4	ALUMINUM FRAMED STOREFRONT SYSTEM
W5	SLIDING / FOLDING GLASS PARTITION
W6	FRP WALL PANEL
W7	COMPOSITE WOOD SIDING
W8	GLAZED PARTITION
W9	FOLDING ACCORDION PARTITION
	CEILING
C1	FRAMED GYP. BD. CEILING, PAINTED
C2	ACOUSTICAL CEILING TILE
C3	CEMENT PLASTER, PAINTED
C4	WOOD SLAT CEILING
C5	COMPOSITE WOOD CEILING / SOFFIT CLADDING
C6	METAL DECK, S.S.D., PAINTED
C7	CEMENT PLASTER, PAINTED

GENERAL FINISH NOTES

1. ALL SURFACES EXPOSED TO VIEW SHALL RECEIVE A FIELD APPLIED PAINT FINISH, UNLESS SHOP FINISHED, PRE-FINISHED, OR SPECIFICALLY NOTED NOT TO BE PAINTED.

2. PAINT ALL STRUCTURAL STEEL COLUMNS, BEAMS, FRAMING, DECKING AND ALL MISCELLANEOUS SUSPENSION HARDWARE AND ALL UTILITIES
EXPOSED TO PUBLIC VIEW ABOVE LINEAR WOOD CEILINGS. COLOR SHALL BE BLACK, EGGSHELL SHEEN

3. AT MECHANICAL ROOMS, ELECTRICAL ROOMS, STORAGE ROOMS, STAIRS AND OTHER BACK OF HOUSE ROOMS WHERE A CEILING PAINT FINISH IS REQUIRED, PAINT ALL STRUCTURAL STEEL COLUMNS,
BEAMS, FRAMING, DECKING AND ALL MISCELLANEOUS SUSPENSION HARDWARE AND ALL UTILITIES EXPOSED TO VIEW. COLOR SHALL BE WHITE, EGGSHELL SHEEN

els architecture+ urban design
2040 Addison St, Berkeley, CA 94704
510.549.2929 | elsarch.com

PROJECT:

PIEDMONT COMMUNITY POOL
777 MAGNOLIA AVENUE
PIEDMONT, CA 94611

CLIENT:
CITY OF PIEDMONT
120 VISTA AVENUE PIEDMONT, CA 94611

PROJECT TEAM:

ARCHITECT:
ELS ARCHITECTURE AND URBAN DESIGN
2040 Addison Street
Berkeley, CA 94704
P: 510.549.2929

CIVIL ENGINEER:
BKF ENGINEERS
4670 Willow Road, Suite 250
Pleasanton, CA 94588
P: (925) 396-7704

LANDSCAPE ARCHITECT:
SWA
2200 Bridgeway
Sausalito, CA 94965
P: 415.332.5100

STRUCTURAL ENGINEER:
FORELL/ELSESSER ENGINEERS, INC.
160 Pine Street, 6th Floor
San Francisco, CA 94111
P: 415.837.0700

MEP / FIRE PROTECTION:
GUTTMANN & BLAEVOET
1620 Montgomery Street, Suite 230
San Francisco, CA 94111
P: 415.655.4000

AQUATICS:
AQUATICS DESIGN GROUP
2226 Faraday Avenue
Carlsbad, CA 92008
P: 760.438.8400

SPECIFICATIONS
TOPFLIGHT SPECS
49 Geary Street, Suite 230
San Francisco, CA 94108-5748
P: 415.546.6033

REVISION

NUMBER	DATE	DESCRIPTION

ISSUE:
100% DESIGN DEVELOPMENT

DATE:
APRIL 30, 2022

STAMP:

NOT FOR CONSTRUCTION

SHEET TITLE:
SCHEDULES - ROOM FINISHES & DOOR

SHEET NUMBER:
A800

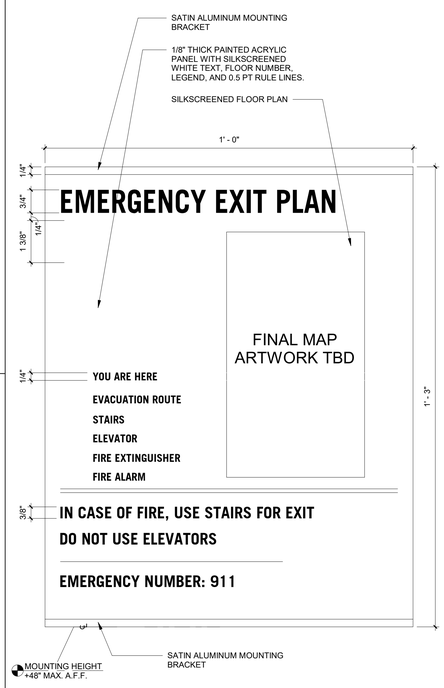

15 SIGN - EES - EVACUATION SIGN
6" = 1'-0"

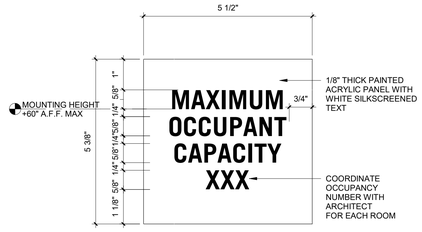

12 SIGN - MAX OCCUPANCY
6" = 1'-0"

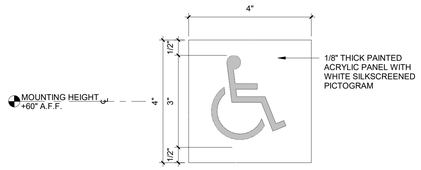

8 SIGN - ACCESSIBLE ENTRANCE SIGN
6" = 1'-0"

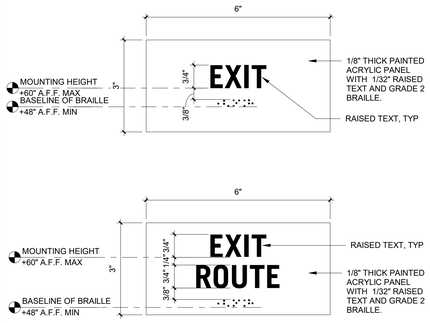

4 SIGN - TE - TACTILE EXIT/ROUTE SIGNAGE
6" = 1'-0"

NOTE:
1. PROVIDE 'BUILDING FIREWATER CONTROL VALVE ' SIGNAGE AT UNDER VALVE INSIDE ROOM
2. PROVIDE 'BUILDING FIREWATER CONTROL VALVE INSIDE' SIGNAGE ON DOOR TO ROOM.
4. SIZE OF SIGNAGE VARIES WITH ACTUAL TEXT. SAMPLE TEXT SHOWN TO THE LEFT.

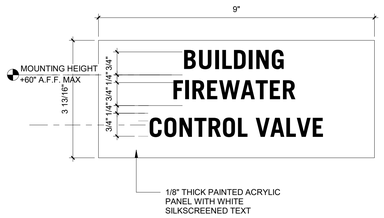

11 SIGN - BUILDING FIREWATER
6" = 1'-0"

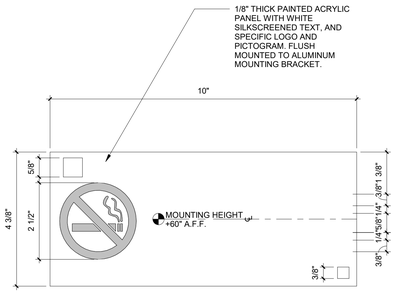

7 SIGN - NO SMOKING
6" = 1'-0"

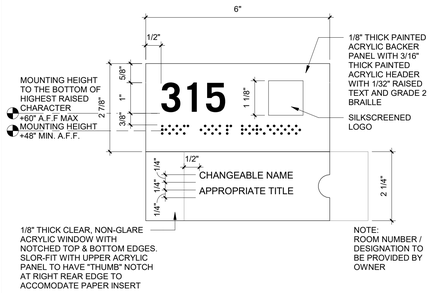

3 SIGN - TACTILE ROOM ID - NUMBER AND ROOM NAME
6" = 1'-0"

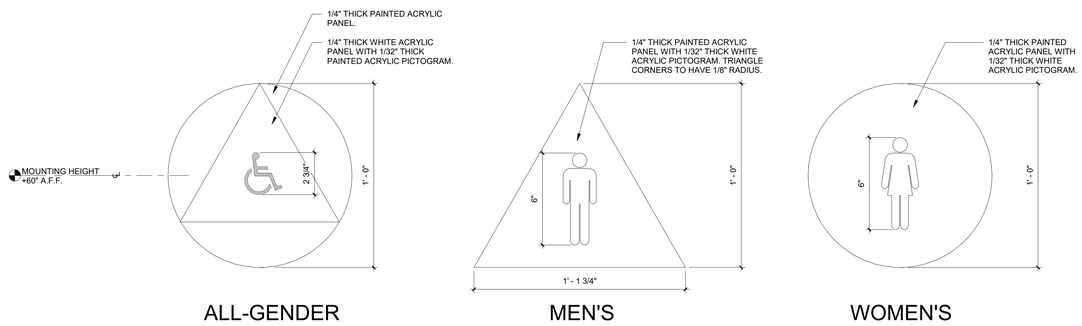

14 SIGN - RESTROOM ID - DOOR MOUNTED
3" = 1'-0"

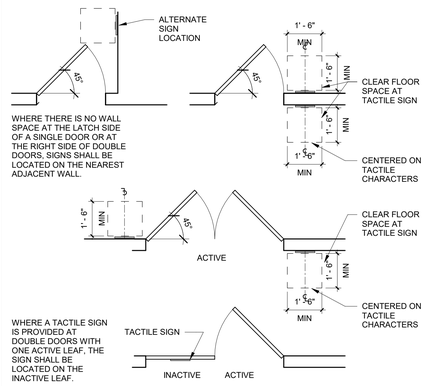

2 SIGN - LOCATION OF TACTILE SIGNS AT DOORS
3/8" = 1'-0"

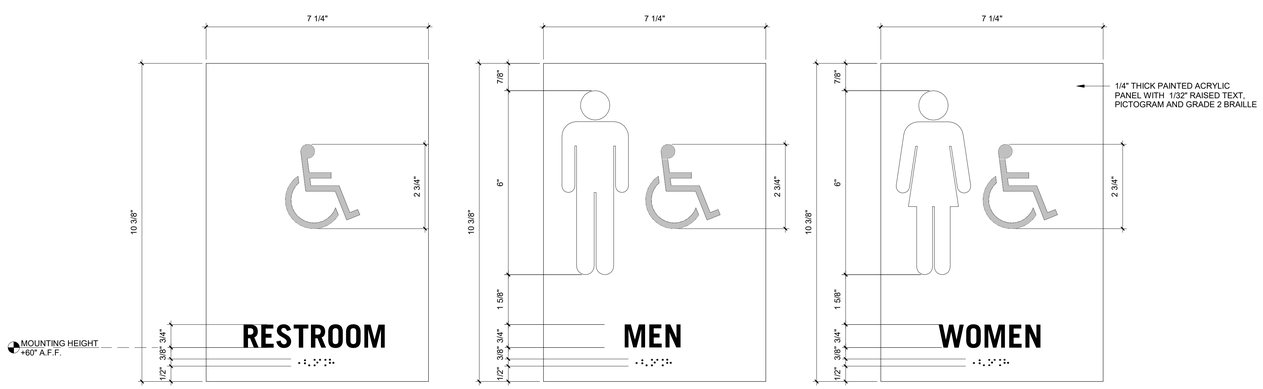

13 SIGN - RESTROOM TACTILE ID
6" = 1'-0"

GENERAL SIGNAGE NOTES

1. CHARACTERS AND THEIR BACKGROUNDS SHALL HAVE A NON-GLARE FINISH. CHARACTERS SHALL CONTRAST WITH THEIR BACKGROUNDS WITH EITHER LIGHT CHARACTERS ON A DARK BACKGROUND OR DARK CHARACTERS ON A LIGHT BACKGROUND.

2. PICTOGRAMS AND THEIR FIELD SHALL HAVE A NON-GLARE FINISH. PICTOGRAMS SHALL CONTRAST WITH THEIR FIELD EITHER WITH EITHER A LIGHT PICTOGRAM ON A DARK FIELD OR A DARK PICTOGRAM ON A LIGHT FIELD.

3. THE TRIANGLE AND CIRCLE SYMBOL SHALL CONTRAST WITH THE DOOR, EITHER DARK ON A LIGHT BACKGROUND OR LIGHT WITH A DARK BACKGROUND. AT UNISEX TOILET AND BATHING FACILITIES, THE TRIANGLE SYMBOL SHALL CONTRAST WITH THE CIRCLE SYMBOL, EITHER LIGHT ON A DARK BACKGROUND OR DARK ON A LIGHT BACKGROUND. THE CIRCLE SYMBOL SHALL CONTRAST WITH THE DOOR, EITHER LIGHT ON A DARK BACKGROUND OR DARK ON A LIGHT BACKGROUND.

4. DARK COLOR TO BE SCHOOL SPECIFIC IN PMS: AQUATIC CENTER = XXX , LIGHT COLOR TO BE WHITE.

5. EDGES AND VERTICES ON GEOMETRIC SYMBOLS: EDGES SHALL BE EASED OR ROUNDED AT 1/16 INCH (1.59 MM) MINIMUM, OR CHAMFERED AT 1/8 INCH (3.2 MM) MAXIMUM. VERTICES SHALL BE RADIUSED BETWEEN 1/8 INCH (3.2 MM) MINIMUM AND 1/4 INCH (6.4 MM) MAXIMUM.

6. RAISED CHARACTERS SHALL BE 1/32 INCH (0.8 MM) MINIMUM ABOVE THEIR BACKGROUND. CHARACTERS SHALL BE UPPERCASE. CHARACTERS SHALL BE SANS SERIF. CHARACTERS SHALL NOT BE ITALIC, OBLIQUE, SCRIPT, HIGHLY DECORATIVE, OR OF OTHER UNUSUAL FORMS. RAISED CHARACTERS SHALL COMPLY WITH SECTION 11B-703.2 AND SHALL BE DUPLICATED IN BRAILLE COMPLYING WITH SECTION 11B-703.3. RAISED CHARACTERS SHALL BE INSTALLED IN ACCORDANCE WITH SECTION 11B-703.4.

7. CHARACTER HEIGHT MEASURED VERTICALLY FROM THE BASELINE OF THE CHARACTER SHALL BE 5/8 INCH (15.9 MM) MINIMUM AND 2 INCHES (51 MM) MAXIMUM BASED ON THE HEIGHT OF THE UPPERCASE LETTER "I". SEE SIGN DETAIL FOR SPECIFIC HEIGHTS.

els architecture+ urban design
2040 Addison St, Berkeley, CA 94704
510.549.2929 | elsarch.com

PROJECT:

PIEDMONT COMMUNITY POOL

777 MAGNOLIA AVENUE PIEDMONT, CA 94611

CLIENT:

CITY OF PIEDMONT

120 VISTA AVENUE PIEDMONT, CA 94611

PROJECT TEAM:

ARCHITECT:
ELS ARCHITECTURE AND URBAN DESIGN
2040 Addison Street
Berkeley, CA 94704
P: 510.549.2929

CIVIL ENGINEER:
BKF ENGINEERS
4670 Willow Road, Suite 250
Pleasanton, CA 94588
P: (925) 396-7704

LANDSCAPE ARCHITECT:
SWA
2200 Bridgeway
Sausalito, CA 94965
P: 415.332.5100

STRUCTURAL ENGINEER:
FORELL/ELSESSER ENGINEERS, INC.
160 Pine Street, 6th Floor
San Francisco, CA 94111
P: 415.837.0700

MEP / FIRE PROTECTION:
GUTTMANN & BLAEVOET
1620 Montgomery Street, Suite 230
San Francisco, CA 94111
P: 415.655.4000

AQUATICS:
AQUATICS DESIGN GROUP
2226 Faraday Avenue
Carlsbad, CA 92008
P: 760.438.8400

SPECIFICATIONS
TOPFLIGHT SPECS
49 Geary Street, Suite 230
San Francisco, CA 94108-5748
P: 415.546.6033

REVISION

NUMBER	DATE	DESCRIPTION

ISSUE:
100% DESIGN DEVELOPMENT

DATE:
APRIL 30, 2022

STAMP:

NOT FOR CONSTRUCTION

SHEET TITLE:
SIGNAGE TYPE AND DETAILS

SHEET NUMBER:
A801

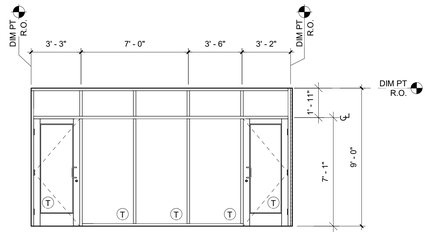

TYPE: SF5

GLAZING: GL-X

FRAME: ALUMINUM, PTD. SEE SPEC FOR COLOR

5 STOREFRONT - SF5
1/4" = 1'-0"

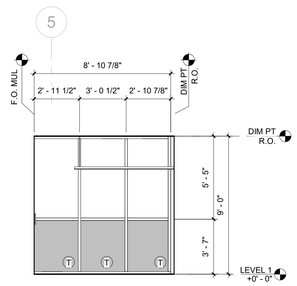

TYPE: SF4

GLAZING: GL-# ; SPANDREL GL- #

FRAME: ALUMINUM, PTD. SEE SPEC FOR COLOR

4 STOREFRONT - SF4
1/4" = 1'-0"

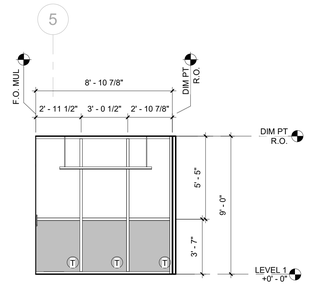

TYPE: SF3

GLAZING: GL-# ; SPANDREL GL-#

FRAME: ALUMINUM, PTD. SEE SPEC FOR COLOR

3 STOREFRONT SF3
1/4" = 1'-0"

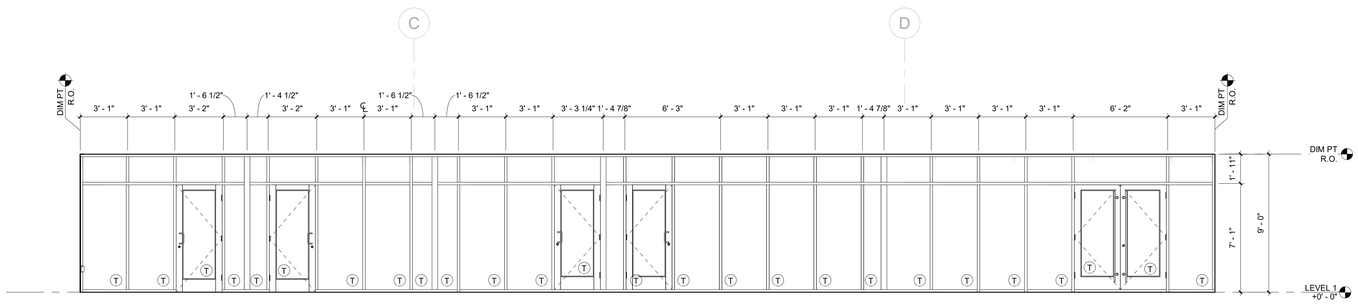

TYPE: SF2

GLAZING: GL-#

FRAME: ALUMINUM, PTD. SEE SPEC FOR COLOR

2 STOREFRONT - SF2
1/4" = 1'-0"

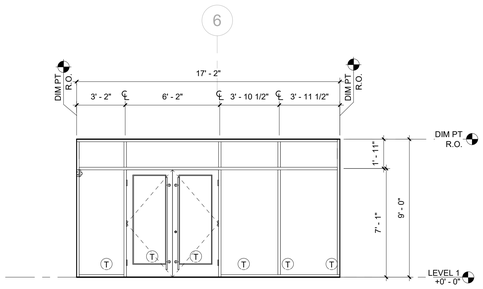

TYPE: SF1

GLAZING: GL-#

FRAME: ALUMINUM, PTD. SEE SPEC FOR COLOR

1 STOREFRONT SF1
1/4" = 1'-0"

KEYNOTES

GENERAL NOTES

els architecture+ urban design
2040 Addison St, Berkeley, CA 94704
510.549.2929 | elsarch.com

PROJECT:

PIEDMONT COMMUNITY POOL

777 MAGNOLIA AVENUE PIEDMONT, CA 94611

CLIENT:

CITY OF PIEDMONT

120 VISTA AVENUE PIEDMONT, CA 94611

PROJECT TEAM:

ARCHITECT:
ELS ARCHITECTURE AND URBAN DESIGN
2040 Addison Street
Berkeley, CA 94704
P: 510.549.2929

CIVIL ENGINEER:
BKF ENGINEERS
4670 Willow Road, Suite 250
Pleasanton, CA 94588
P: (925) 396-7704

LANDSCAPE ARCHITECT:
SWA
2200 Bridgeway
Sausalito, CA 94965
P: 415.332.5100

STRUCTURAL ENGINEER:
FORELL/ELSESSER ENGINEERS, INC.
160 Pine Street, 6th Floor
San Francisco, CA 94111
P: 415.837.0700

MEP / FIRE PROTECTION:
GUTTMANN & BLAEVOET
1620 Montgomery Street, Suite 230
San Francisco, CA 94111
P: 415.655.4000

AQUATICS:
AQUATICS DESIGN GROUP
2226 Faraday Avenue
Carlsbad, CA 92008
P: 760.438.8400

SPECIFICATIONS
TOPFLIGHT SPECS
49 Geary Street, Suite 230
San Francisco, CA 94108-5748
P: 415.546.6033

REVISION

NUMBER	DATE	DESCRIPTION

ISSUE:
100% DESIGN DEVELOPMENT

DATE:
APRIL 30, 2022

STAMP:

NOT FOR CONSTRUCTION

SHEET TITLE:
STOREFRONT SCHEDULE

SHEET NUMBER:
A805

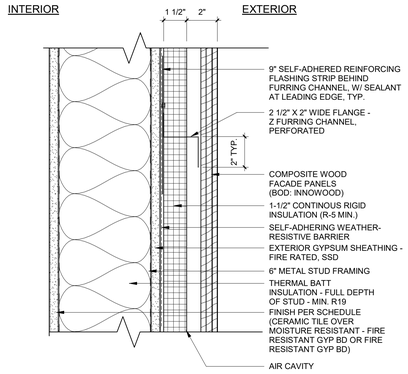

T EXTERIOR WALL ASSEMBLY - COMPOSITE WOOD RAINSCREEN - RATED
3" = 1'-0"

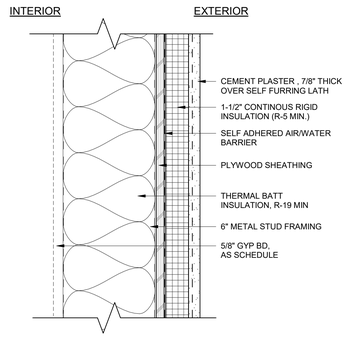

P EXTERIOR WALL ASSEMBLY - CEMENT PLASTER OVER STUD FRAMING
3" = 1'-0"

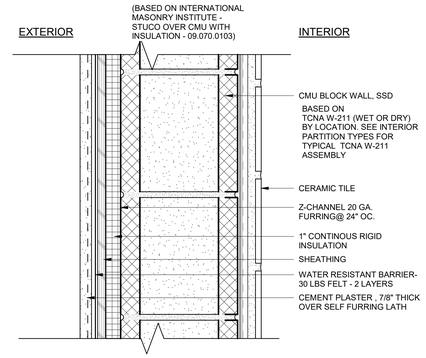

L EXTERIOR WALL ASSEMBLY - CEMENT PLASTER OVER CMU
3" = 1'-0"

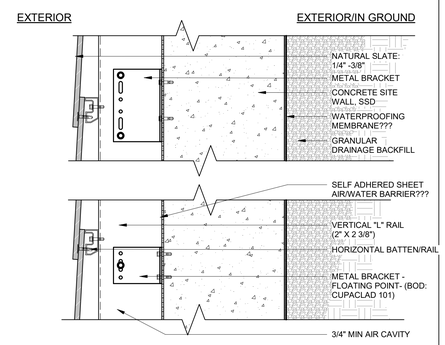

H EXTERIOR WALL ASSEMBLY - SLATE OVER CONCRETE
3" = 1'-0"

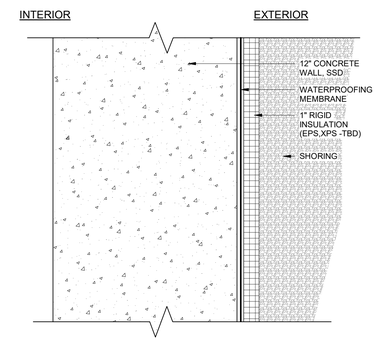

D EXTERIOR CONCRETE - CONCRETE
3" = 1'-0"

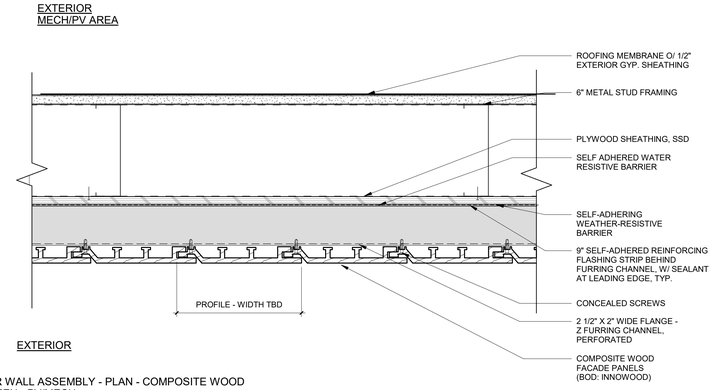

S EXTERIOR WALL ASSEMBLY - PLAN - COMPOSITE WOOD RAINSCREEN - PV/MECH
3" = 1'-0"

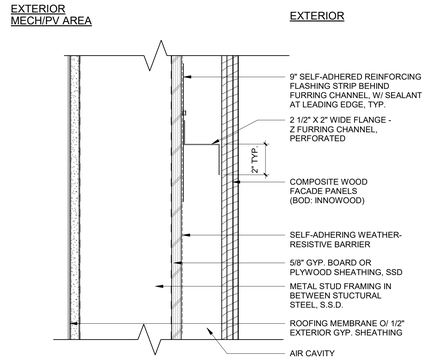

K EXTERIOR WALL ASSEMBLY - COMPOSITE WOOD RAINSCREEN - PV/MECH
3" = 1'-0"

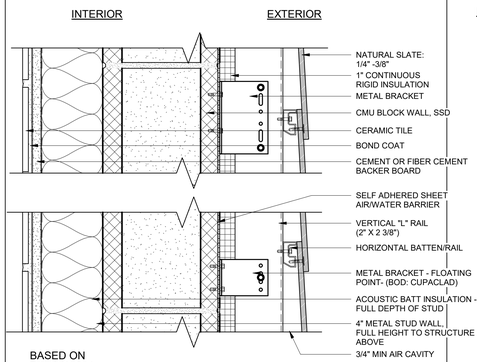

G EXTERIOR WALL ASSEMBLY - SLATE OVER CMU - TILE OVER STUD
3" = 1'-0"

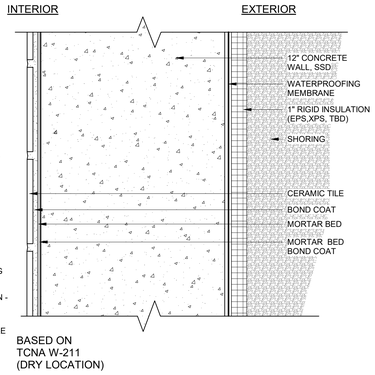

C EXTERIOR CONCRETE - TILE OVER CONCRETE- DRY
3" = 1'-0"

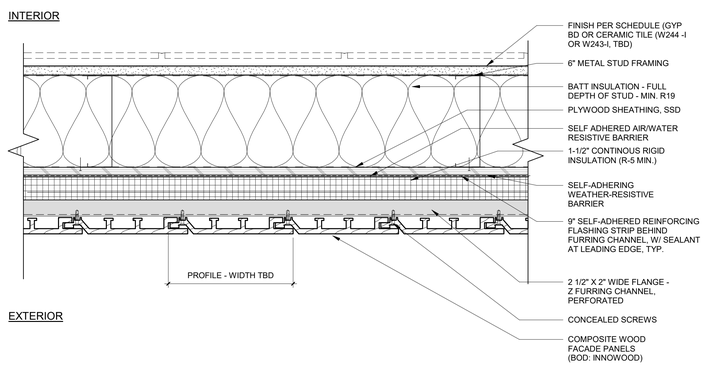

R EXTERIOR WALL ASSEMBLY - PLAN - COMPOSITE WOOD RAINSCREEN
3" = 1'-0"

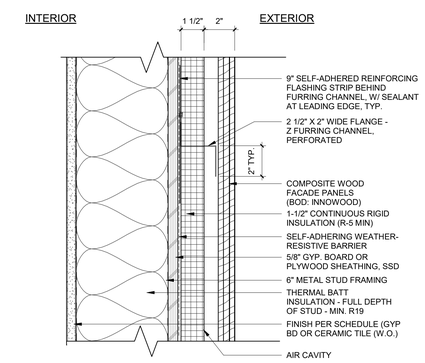

J EXTERIOR WALL ASSEMBLY - COMPOSITE WOOD RAINSCREEN
3" = 1'-0"

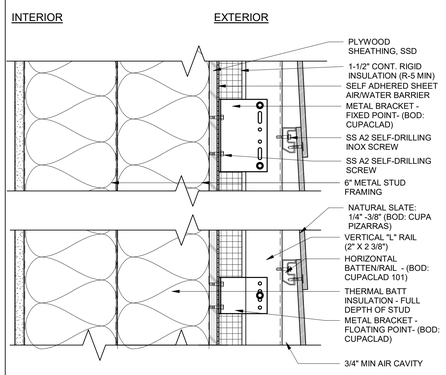

F EXTERIOR WALL ASSEMBLY- DOUBLE STUD-SLATE RAINSCREEN
3" = 1'-0"

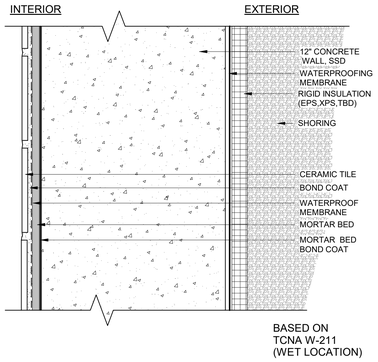

B EXTERIOR CONCRETE - TILE OVER CONCRETE - WET
3" = 1'-0"

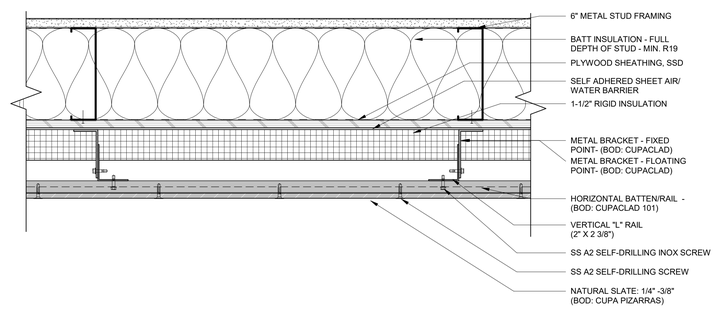

Q EXTERIOR WALL ASSEMBLY - PLAN - SLATE RAINSCREEN
3" = 1'-0"

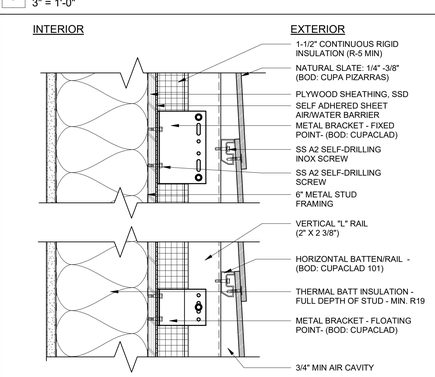

I EXTERIOR WALL ASSEMBLY- SLATE RAINSCREEN
3" = 1'-0"

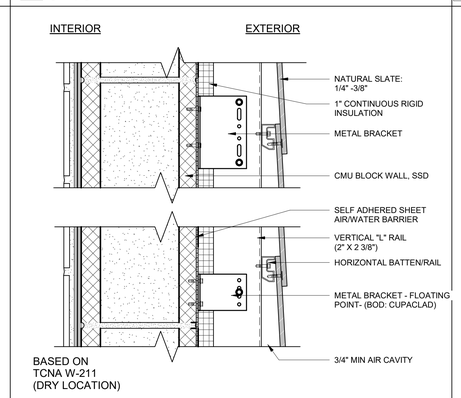

E EXTERIOR WALL ASSEMBLY - SLATE OVER CMU
3" = 1'-0"

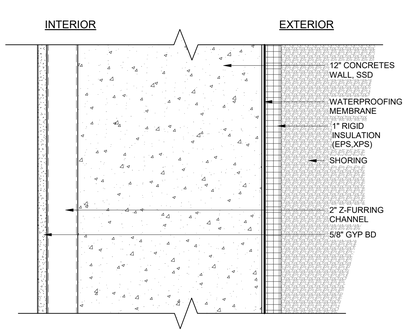

A EXTERIOR CONCRETE - INTERIOR FURRED GYP BD
3" = 1'-0"

els architecture+ urban design
2040 Addison St, Berkeley, CA 94704
510.549.2929 | elsarch.com

PROJECT:

PIEDMONT COMMUNITY POOL

777 MAGNOLIA AVENUE
PIEDMONT, CA 94611

CLIENT:

CITY OF PIEDMONT

120 VISTA AVENUE PIEDMONT, CA 94611

PROJECT TEAM:

ARCHITECT:
ELS ARCHITECTURE AND URBAN DESIGN
2040 Addison Street
Berkeley, CA 94704
P: 510.549.2929

CIVIL ENGINEER:
BKF ENGINEERS
4670 Willow Road, Suite 250
Pleasanton, CA 94588
P: (925) 396-7704

LANDSCAPE ARCHITECT:
SWA
2200 Bridgeway
Sausalito, CA 94965
P: 415.332.5100

STRUCTURAL ENGINEER:
FORELL/ELSESSER ENGINEERS, INC.
160 Pine Street, 6th Floor
San Francisco, CA 94111
P: 415.837.0700

MEP / FIRE PROTECTION:
GUTTMANN & BLAEVOET
1620 Montgomery Street, Suite 230
San Francisco, CA 94111
P: 415.655.4000

AQUATICS:
AQUATICS DESIGN GROUP
2226 Faraday Avenue
Carlsbad, CA 92008
P: 760.438.8400

SPECIFICATIONS
TOPFLIGHT SPECS
49 Geary Street, Suite 230
San Francisco, CA 94108-5748
P: 415.546.6033

REVISION

NUMBER	DATE	DESCRIPTION

ISSUE:
100% DESIGN DEVELOPMENT

DATE:
APRIL 30, 2022

STAMP:

NOT FOR CONSTRUCTION

SHEET TITLE:

EXTERIOR WALL ASSEMBLY TYPES

SHEET NUMBER:

A820

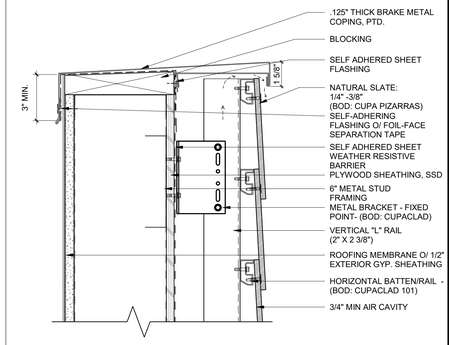

4 TOP OF WALL- COPING - SLATE CLADDING
3" = 1'-0"

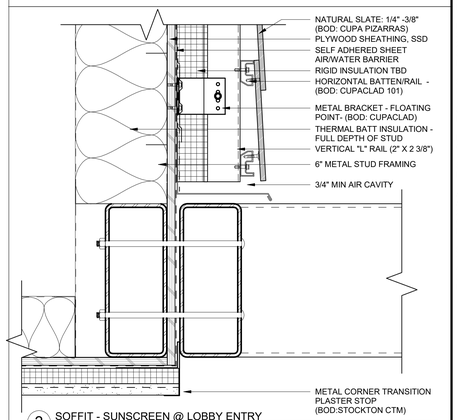

3 SOFFIT - SUNSCREEN @ LOBBY ENTRY
3" = 1'-0"

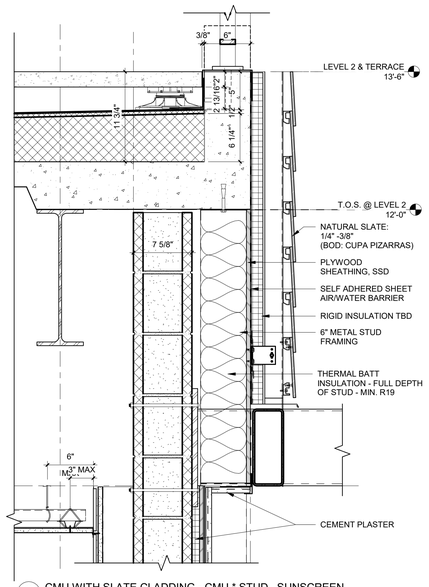

8 CMU WITH SLATE CLADDING - CMU * STUD_ SUNSCREEN
1 1/2" = 1'-0"

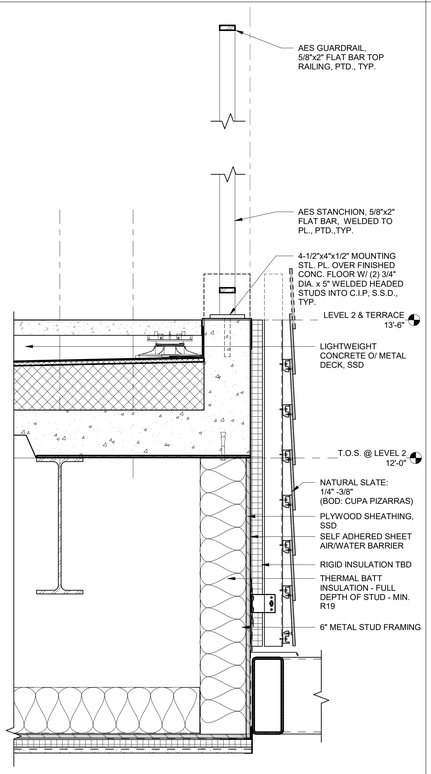

5 CMU WITH SLATE CLADDING - SOFFIT_ SUNSCREEN
1 1/2" = 1'-0"

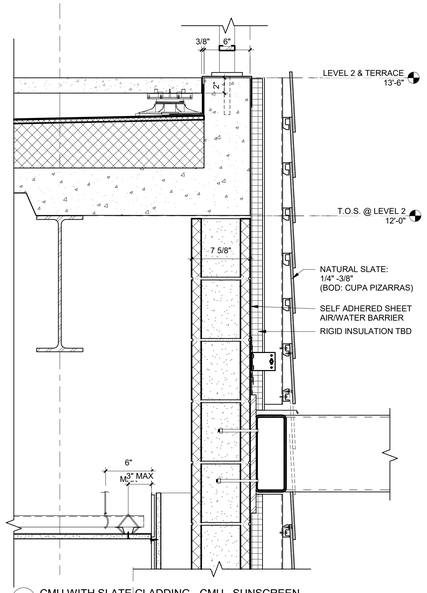

1 CMU WITH SLATE CLADDING - CMU_ SUNSCREEN
1 1/2" = 1'-0"

els architecture+ urban design
2040 Addison St, Berkeley, CA 94704
510.549.2929 | elsarch.com

PROJECT:

PIEDMONT COMMUNITY POOL

777 MAGNOLIA AVENUE
PIEDMONT, CA 94611

CLIENT:

CITY OF PIEDMONT

120 VISTA AVENUE PIEDMONT, CA 94611

PROJECT TEAM:

ARCHITECT:
ELS ARCHITECTURE AND URBAN DESIGN
2040 Addison Street
Berkeley, CA 94704
P: 510.549.2929

CIVIL ENGINEER:
BKF ENGINEERS
4670 Willow Road, Suite 250
Pleasanton, CA 94588
P: (925) 396-7704

LANDSCAPE ARCHITECT:
SWA
2200 Bridgeway
Sausalito, CA 94965
P: 415.332.5100

STRUCTURAL ENGINEER:
FORELL/ELSESSER ENGINEERS, INC.
160 Pine Street, 6th Floor
San Francisco, CA 94111
P: 415.837.0700

MEP / FIRE PROTECTION:
GUTTMANN & BLAEVOET
1620 Montgomery Street, Suite 230
San Francisco, CA 94111
P: 415.655.4000

AQUATICS:
AQUATICS DESIGN GROUP
2226 Faraday Avenue
Carlsbad, CA 92008
P: 760.438.8400

SPECIFICATIONS
TOPFLIGHT SPECS
49 Geary Street, Suite 230
San Francisco, CA 94108-5748
P: 415.546.6033

REVISION

NUMBER	DATE	DESCRIPTION

ISSUE:
100% DESIGN DEVELOPMENT

DATE:
APRIL 30, 2022

STAMP:

NOT FOR CONSTRUCTION

SHEET TITLE:

EXTERIOR DETAILS - SLATE CLADDING

SHEET NUMBER:

A821

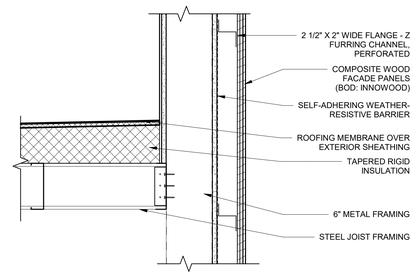

8 PARAPET - RESTROOM & STORAGE
1 1/2" = 1'-0"

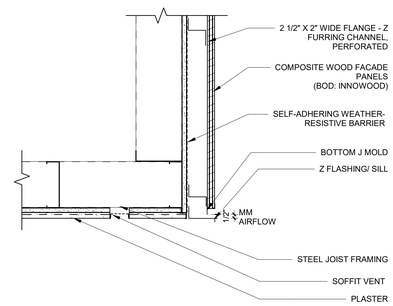

7 SOFFIT - HALLWAY ADJ RESTROOM & MECH AREA
1 1/2" = 1'-0"

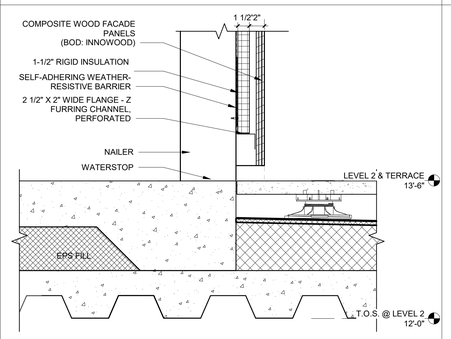

6 BASE OF EXT WALL - AT DOOR
1 1/2" = 1'-0"

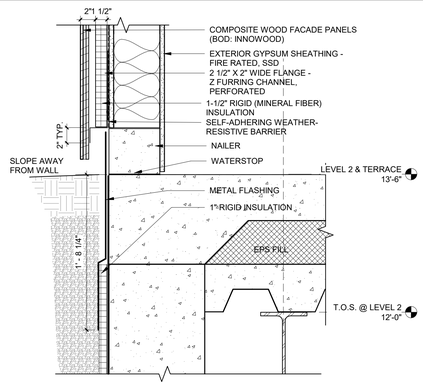

2 WOOD EXT WALL @ DECK - CONCRETE WALL
1 1/2" = 1'-0"

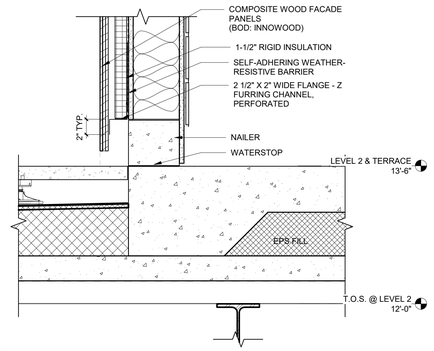

1 BASE OF EXT WALL - ROOF TERRACE
1 1/2" = 1'-0"

els architecture+ urban design
2040 Addison St, Berkeley, CA 94704
510.549.2929 | elsarch.com

PROJECT:

PIEDMONT COMMUNITY POOL
777 MAGNOLIA AVENUE
PIEDMONT, CA 94611

CLIENT:

CITY OF PIEDMONT
120 VISTA AVENUE PIEDMONT, CA 94611

PROJECT TEAM:

ARCHITECT:
ELS ARCHITECTURE AND URBAN DESIGN
2040 Addison Street
Berkeley, CA 94704
P: 510.549.2929

CIVIL ENGINEER:
BKF ENGINEERS
4670 Willow Road, Suite 250
Pleasanton, CA 94588
P: (925) 396-7704

LANDSCAPE ARCHITECT:
SWA
2200 Bridgeway
Sausalito, CA 94965
P: 415.332.5100

STRUCTURAL ENGINEER:
FORELL/ELSESSER ENGINEERS, INC.
160 Pine Street, 6th Floor
San Francisco, CA 94111
P: 415.837.0700

MEP / FIRE PROTECTION:
GUTTMANN & BLAEVOET
1620 Montgomery Street, Suite 230
San Francisco, CA 94111
P: 415.655.4000

AQUATICS:
AQUATICS DESIGN GROUP
2226 Faraday Avenue
Carlsbad, CA 92008
P: 760.438.8400

SPECIFICATIONS
TOPFLIGHT SPECS
49 Geary Street, Suite 230
San Francisco, CA 94108-5748
P: 415.546.6033

REVISION

NUMBER	DATE	DESCRIPTION

ISSUE:
100% DESIGN DEVELOPMENT

DATE:
APRIL 30, 2022

STAMP:

NOT FOR CONSTRUCTION

SHEET TITLE:
EXTERIOR DETAILS - WOOD COMPOSITE

SHEET NUMBER:
A822

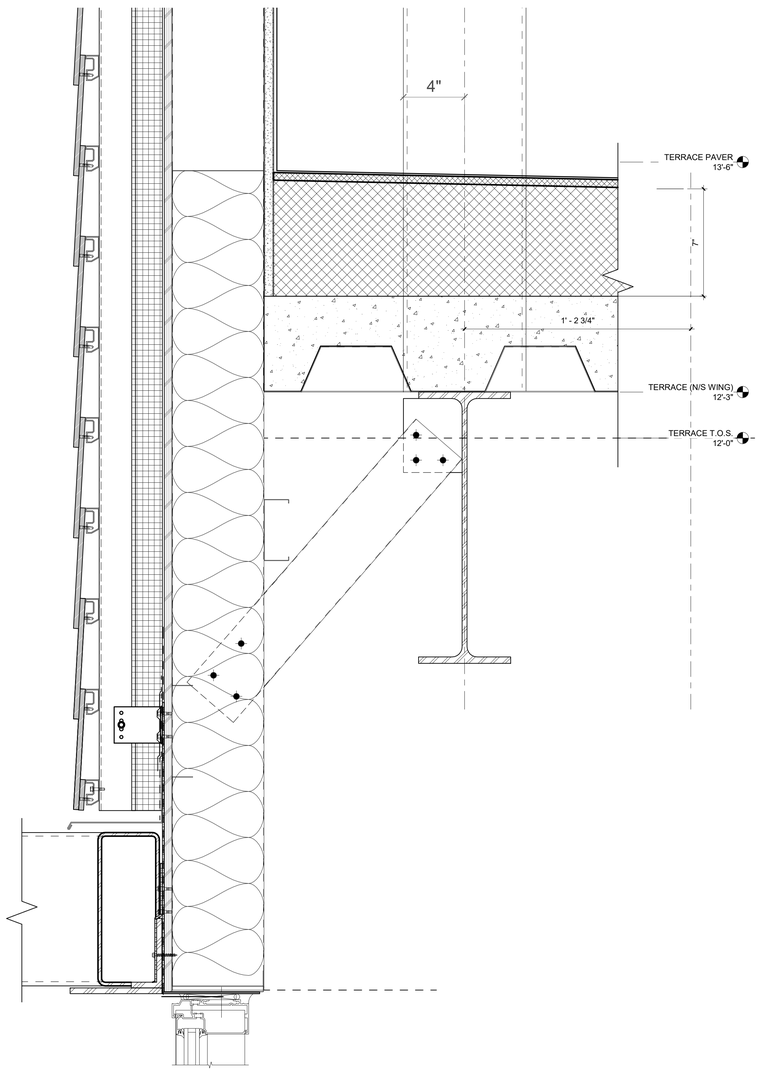

9 TYP. STOREFRONT HEAD @ SLATE CLADDING Copy 1
3" = 1'-0"

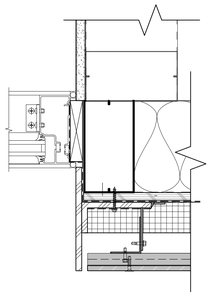

12 TYP. STOREFRONT JAMB @ SLATE CLADDING -OUTSIDE CORNER
3" = 1'-0"

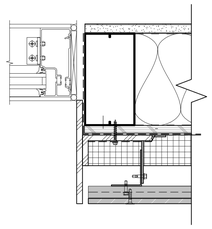

8 TYP. STOREFRONT JAMB @ SLATE CLADDING
3" = 1'-0"

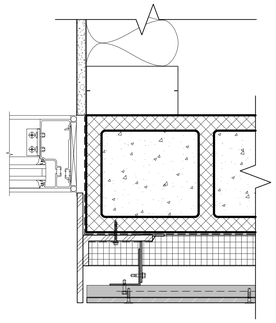

4 TYP. STOREFRONT JAMB @ CMU - SLATE CLADDING - PERPENDICULAR
3" = 1'-0"

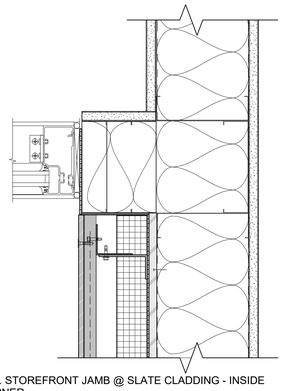

7 TYP. STOREFRONT JAMB @ SLATE CLADDING - INSIDE CORNER
3" = 1'-0"

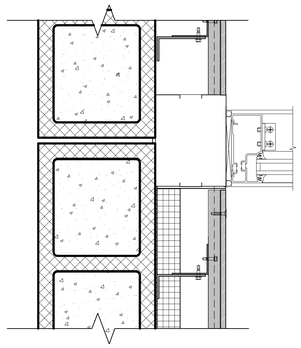

3 TYP. STOREFRONT JAMB @ CMU - SLATE CLADDING
3" = 1'-0"

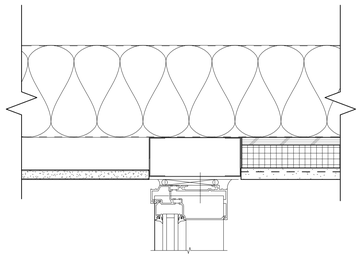

10 TYP. STOREFRONT HEAD - PLASTER SOFFIT
3" = 1'-0"

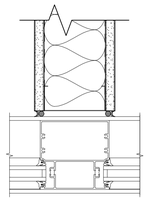

6 TYP. STOREFRONT VERTICAL MULLION - WIDE @ STUD WALL
3" = 1'-0"

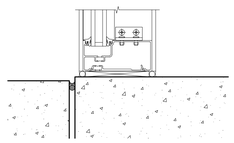

2 TYP. STOREFRONT SILL
3" = 1'-0"

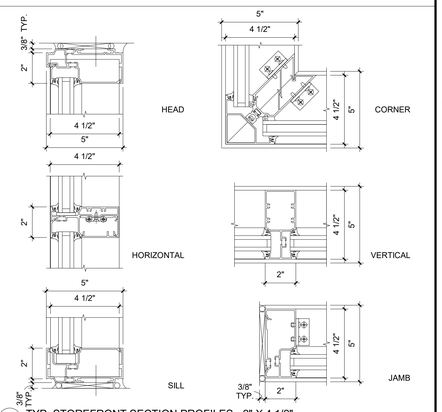

1 TYP. STOREFRONT SECTION PROFILES - 2" X 4 1/2"
3" = 1'-0"

els architecture+ urban design
2040 Addison St, Berkeley, CA 94704
510.549.2929 | elsarch.com

PROJECT:

PIEDMONT COMMUNITY POOL
777 MAGNOLIA AVENUE
PIEDMONT, CA 94611

CLIENT:

CITY OF PIEDMONT
120 VISTA AVENUE PIEDMONT, CA 94611

PROJECT TEAM:

ARCHITECT:
ELS ARCHITECTURE AND URBAN DESIGN
2040 Addison Street
Berkeley, CA 94704
P: 510.549.2929

CIVIL ENGINEER:
BKF ENGINEERS
4670 Willow Road, Suite 250
Pleasanton, CA 94588
P: (925) 396-7704

LANDSCAPE ARCHITECT:
SWA
2200 Bridgeway
Sausalito, CA 94965
P: 415.332.5100

STRUCTURAL ENGINEER:
FORELL/ELSESSER ENGINEERS, INC.
160 Pine Street, 6th Floor
San Francisco, CA 94111
P: 415.837.0700

MEP / FIRE PROTECTION:
GUTTMANN & BLAEVOET
1620 Montgomery Street, Suite 230
San Francisco, CA 94111
P: 415.655.4000

AQUATICS:
AQUATICS DESIGN GROUP
2226 Faraday Avenue
Carlsbad, CA 92008
P: 760.438.8400

SPECIFICATIONS
TOPFLIGHT SPECS
49 Geary Street, Suite 230
San Francisco, CA 94108-5748
P: 415.546.6033

REVISION

NUMBER	DATE	DESCRIPTION

ISSUE:
100% DESIGN DEVELOPMENT

DATE:
APRIL 30, 2022

STAMP:

NOT FOR CONSTRUCTION

SHEET TITLE:
EXTERIOR DETAILS - STOREFRONT & DOORS

SHEET NUMBER:
A830

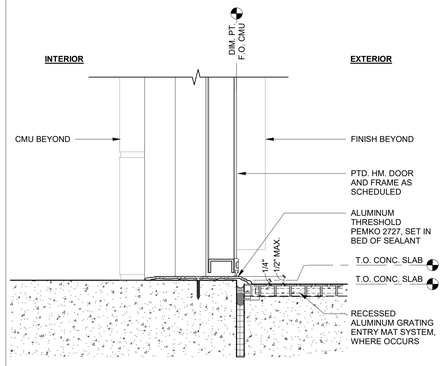

4 THRESHOLD - SEALED CONC. TO POOL DECK
3" = 1'-0"

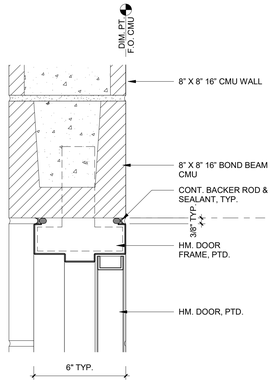

11 HOLLOW METAL FRAME @ CMU WALL
3" = 1'-0"

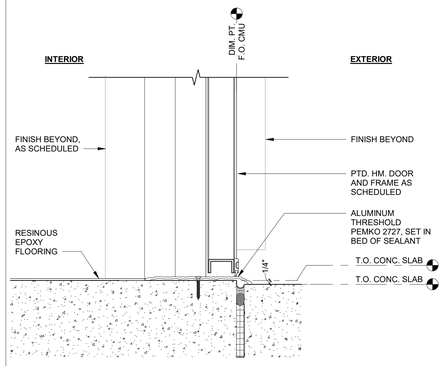

3 THRESHOLD - RESINOUS EPOXY TO POOL DECK
3" = 1'-0"

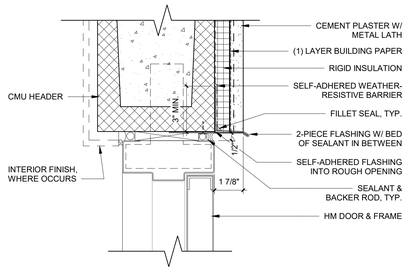

10 TYPICAL HM DOOR HEAD AT CEMENT PLASTER
3" = 1'-0"

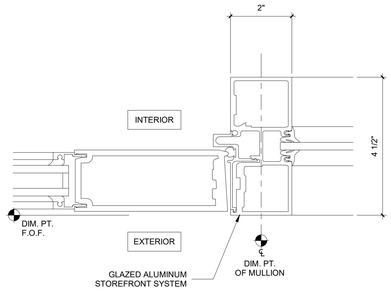

6 TYPICAL STOREFRONT DOOR JAMB
6" = 1'-0"

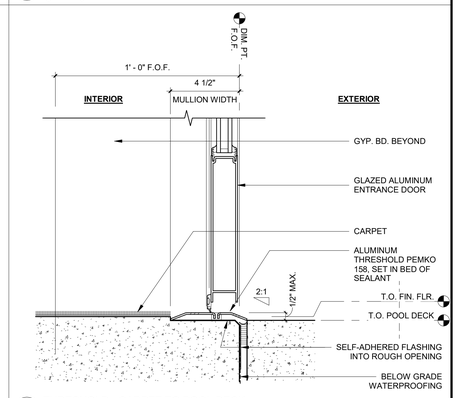

2 THRESHOLD - CARPET TO POOL DECK
3" = 1'-0"

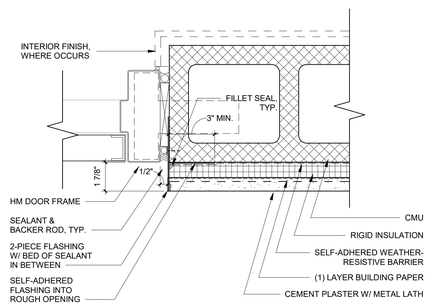

9 TYPICAL HM DOOR JAMB AT CEMENT PLASTER
3" = 1'-0"

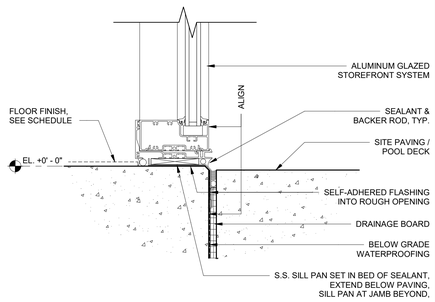

5 TYPICAL STOREFRONT SILL
3" = 1'-0"

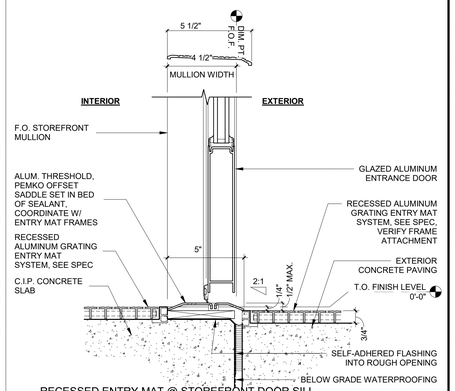

1 RECESSED ENTRY MAT @ STOREFRONT DOOR SILL - ENTRANCE LOBBY
3" = 1'-0"

els architecture+ urban design
2040 Addison St, Berkeley, CA 94704
510.549.2929 | elsarch.com

PROJECT:

PIEDMONT COMMUNITY POOL

777 MAGNOLIA AVENUE
PIEDMONT, CA 94611

CLIENT:

CITY OF PIEDMONT

120 VISTA AVENUE PIEDMONT, CA 94611

PROJECT TEAM:

ARCHITECT:
ELS ARCHITECTURE AND URBAN DESIGN
2040 Addison Street
Berkeley, CA 94704
P: 510.549.2929

CIVIL ENGINEER:
BKF ENGINEERS
4670 Willow Road, Suite 250
Pleasanton, CA 94588
P: (925) 396-7704

LANDSCAPE ARCHITECT:
SWA
2200 Bridgeway
Sausalito, CA 94965
P: 415.332.5100

STRUCTURAL ENGINEER:
FORELL/ELSESSER ENGINEERS, INC.
160 Pine Street, 6th Floor
San Francisco, CA 94111
P: 415.837.0700

MEP / FIRE PROTECTION:
GUTTMANN & BLAEVOET
1620 Montgomery Street, Suite 230
San Francisco, CA 94111
P: 415.655.4000

AQUATICS:
AQUATICS DESIGN GROUP
2226 Faraday Avenue
Carlsbad, CA 92008
P: 760.438.8400

SPECIFICATIONS
TOPFLIGHT SPECS
49 Geary Street, Suite 230
San Francisco, CA 94108-5748
P: 415.546.6033

REVISION

NUMBER	DATE	DESCRIPTION

ISSUE:
100% DESIGN DEVELOPMENT

DATE:
APRIL 30, 2022

STAMP:

NOT FOR CONSTRUCTION

SHEET TITLE:

EXTERIOR DETAILS - DOOR AND THRESHOLD

SHEET NUMBER:

A831

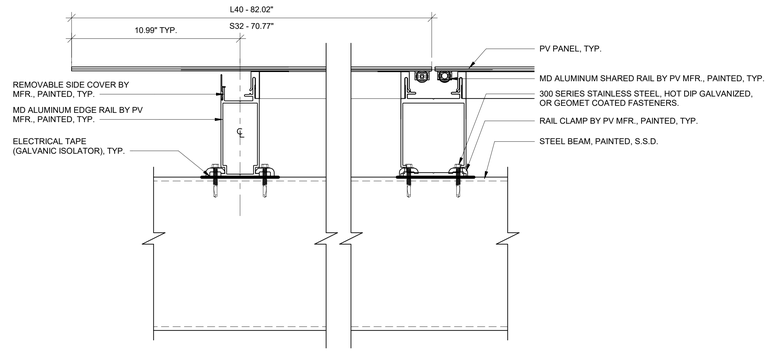

2 PV @ HIGH TRELLIS DETAIL
3" = 1'-0"

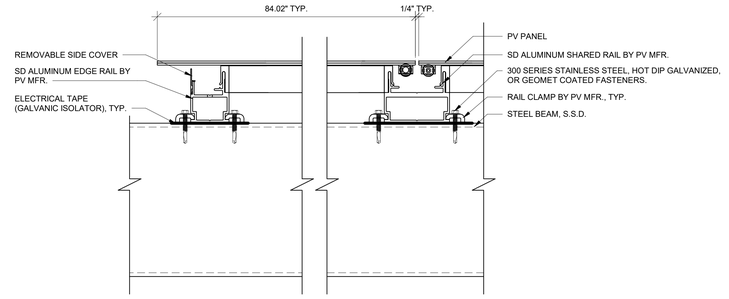

1 PV @ LOW TRELLIS DETAIL
3" = 1'-0"

els architecture+ urban design
2040 Addison St, Berkeley, CA 94704
510.549.2929 | elsarch.com

PROJECT:

PIEDMONT COMMUNITY POOL
777 MAGNOLIA AVENUE
PIEDMONT, CA 94611

CLIENT:

CITY OF PIEDMONT
120 VISTA AVENUE PIEDMONT, CA 94611

PROJECT TEAM:

ARCHITECT:
ELS ARCHITECTURE AND URBAN DESIGN
2040 Addison Street
Berkeley, CA 94704
P: 510.549.2929

CIVIL ENGINEER:
BKF ENGINEERS
4670 Willow Road, Suite 250
Pleasanton, CA 94588
P: (925) 396-7704

LANDSCAPE ARCHITECT:
SWA
2200 Bridgeway
Sausalito, CA 94965
P: 415.332.5100

STRUCTURAL ENGINEER:
FORELL/ELSESSER ENGINEERS, INC.
160 Pine Street, 6th Floor
San Francisco, CA 94111
P: 415.837.0700

MEP / FIRE PROTECTION:
GUTTMANN & BLAEVOET
1620 Montgomery Street, Suite 230
San Francisco, CA 94111
P: 415.655.4000

AQUATICS:
AQUATICS DESIGN GROUP
2226 Faraday Avenue
Carlsbad, CA 92008
P: 760.438.8400

SPECIFICATIONS
TOPFLIGHT SPECS
49 Geary Street, Suite 230
San Francisco, CA 94108-5748
P: 415.546.6033

REVISION

NUMBER	DATE	DESCRIPTION

ISSUE:
100% DESIGN DEVELOPMENT

DATE:
APRIL 30, 2022

STAMP:

NOT FOR CONSTRUCTION

SHEET TITLE:

EXTERIOR DETAILS - ROOF TRELLIS

SHEET NUMBER:

A850

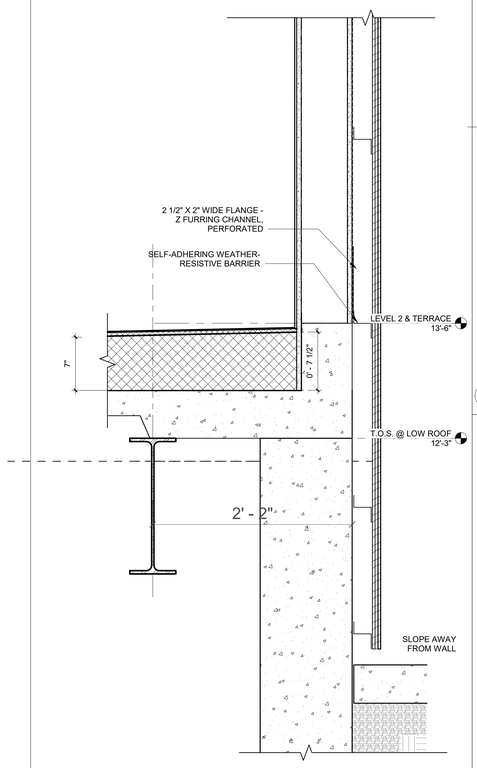

19 BASE OF WALL - WOOD COMPOSITE - DECK
1 1/2" = 1'-0"

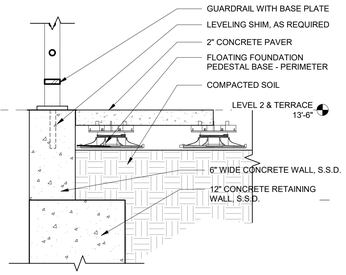

16 PAVER - CONCRETE WALL @ GUARDRAIL
1 1/2" = 1'-0"

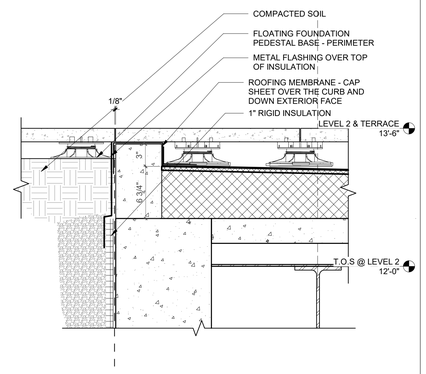

12 ROOF PAVER OVER COMPOSITE DECK & GRADE
1 1/2" = 1'-0"

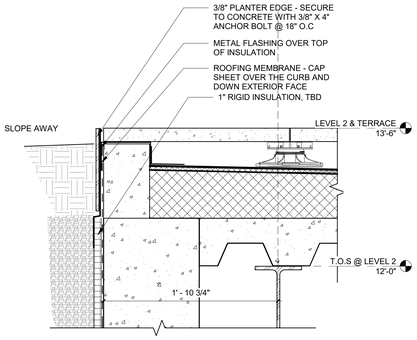

8 PERIMETER OF ROOF TERRRACE
1 1/2" = 1'-0"

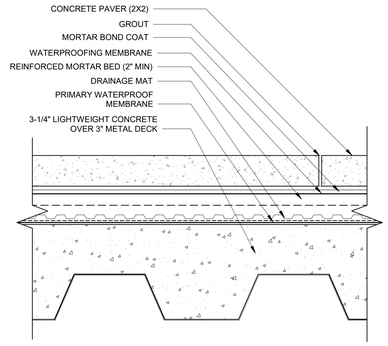

4 DECK AT RAMP - REINFORCED SETTING BED
3" = 1'-0"

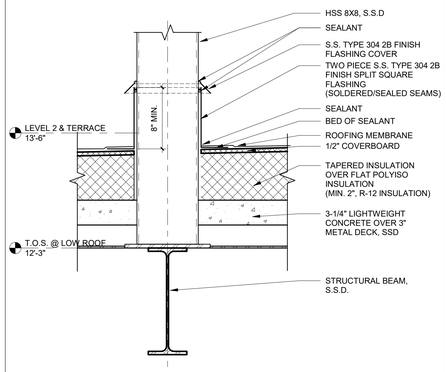

7 ROOF DECK - TRELLIS COLUMN
1 1/2" = 1'-0"

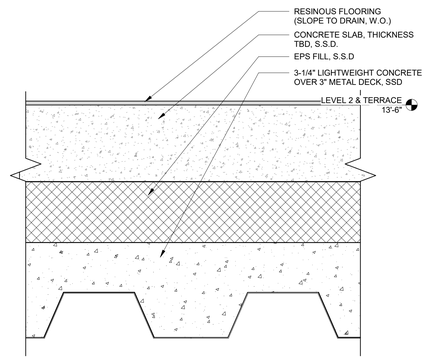

3 ROOF DECK ASSEMBLY - RESTROOM & STORAGE
3" = 1'-0"

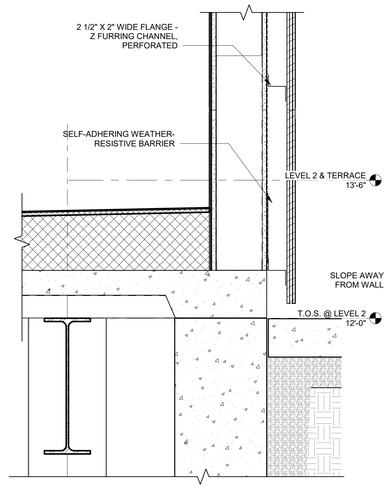

10 BASE OF WALL - MECH AREA
1 1/2" = 1'-0"

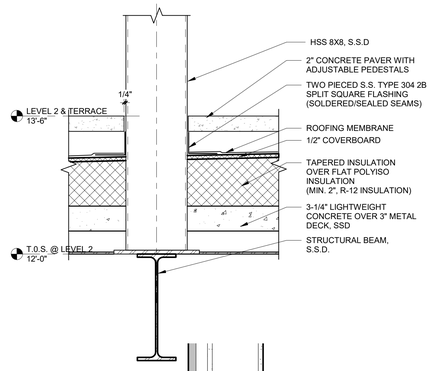

6 ROOF DECK - TRELLIS COLUMN AND PAVER ON PEDESTAL
1 1/2" = 1'-0"

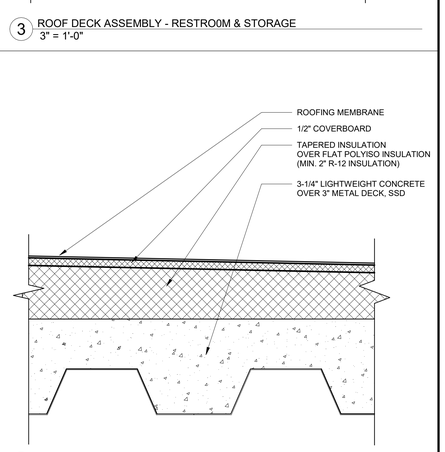

2 ROOF DECK ASSEMBLY- MECH & PV AREA
3" = 1'-0"

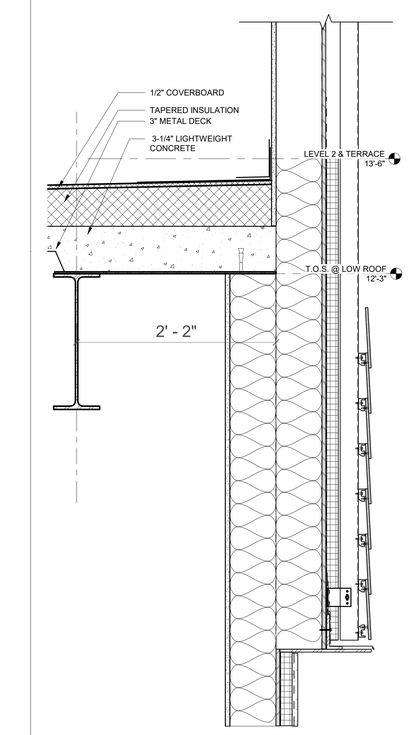

17 WALL SECTION - ROOF DECK - WOOD COMPOSITE - RECYCLE - PV
1 1/2" = 1'-0"

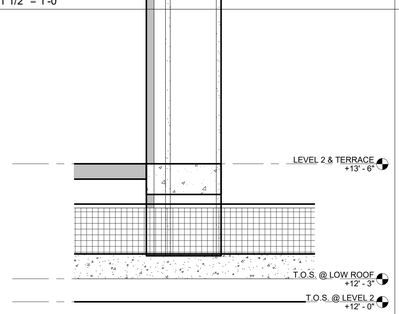

5A PLACEHOLDER - BASE OF MECH AREA - 2ND FLR
1 1/2" = 1'-0"

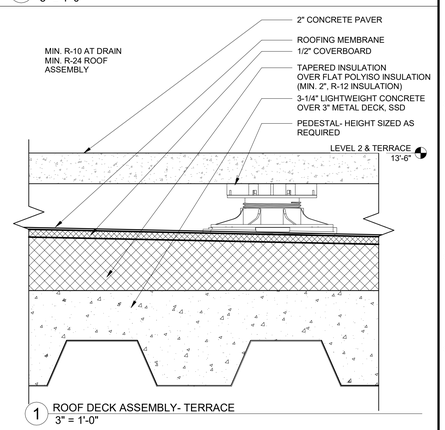

1 ROOF DECK ASSEMBLY- TERRACE
3" = 1'-0"

els architecture+ urban design
2040 Addison St, Berkeley, CA 94704
510.549.2929 | elsarch.com

PROJECT:

PIEDMONT COMMUNITY POOL
777 MAGNOLIA AVENUE
PIEDMONT, CA 94611

CLIENT:

CITY OF PIEDMONT
120 VISTA AVENUE PIEDMONT, CA 94611

PROJECT TEAM:

ARCHITECT:
ELS ARCHITECTURE AND URBAN DESIGN
2040 Addison Street
Berkeley, CA 94704
P: 510.549.2929

CIVIL ENGINEER:
BKF ENGINEERS
4670 Willow Road, Suite 250
Pleasanton, CA 94588
P: (925) 396-7704

LANDSCAPE ARCHITECT:
SWA
2200 Bridgeway
Sausalito, CA 94965
P: 415.332.5100

STRUCTURAL ENGINEER:
FORELL/ELSESSER ENGINEERS, INC.
160 Pine Street, 6th Floor
San Francisco, CA 94111
P: 415.837.0700

MEP / FIRE PROTECTION:
GUTTMANN & BLAEVOET
1620 Montgomery Street, Suite 230
San Francisco, CA 94111
P: 415.655.4000

AQUATICS:
AQUATICS DESIGN GROUP
2226 Faraday Avenue
Carlsbad, CA 92008
P: 760.438.8400

SPECIFICATIONS
TOPFLIGHT SPECS
49 Geary Street, Suite 230
San Francisco, CA 94108-5748
P: 415.546.6033

REVISION

NUMBER	DATE	DESCRIPTION

ISSUE:
100% DESIGN DEVELOPMENT

DATE:
APRIL 30, 2022

STAMP:

NOT FOR CONSTRUCTION

SHEET TITLE:

EXTERIOR DETAILS - ROOF DECK

SHEET NUMBER:

A860

1. ALL FRAMING NOT SHOWN ON STRUCTURAL IS METAL STUD FRAMING U.O.N., SEE SPECS.

2. SEE ROOM FINISH SCHEDULE, FLOOR PLANS AND INTERIOR ELEVATIONS FOR ADDITIONAL INTERIORFINISHES NOT SHOWN.

3. AT ALL WALLS MARKED TYPE 'X' GYP BOARD, USE WATER RESISTANT TYPE 'X' GYP BOARD AT ALL TOILET ROOM PARTITIONS AND USE HIGH-IMPACT TYPE 'X' GYP BOARD AT ALL STORAGE ROOMS AND MECHANICAL ROOM PARTITIONS. USE WATER RESISTANT TYPE "X" GYP BD AT "WET WALLS" IN JANITORS ROOMS, KITCHENS ETC.

4. AT RESTROOMS & ALL WET LOCATIONS USE ONLY WATER RESISTANT ANTIMICROBIAL GYP. BD.

5. RATED SHAFTS SHALL EXTEND TO STRUCTURE ABOVE. PARTITION TYPE INDICATED AT SHAFT EXTENDS ALL THE WAY AROUND SHAFT, U.O.N.

6. RATED PARTITIONS SHALL EXTEND TO STRUCTURE ABOVE AND SHALL BE FULLY SEALED AND FIRE-STOPPED AT CONNECTION TO INDERSIDE OF DECK OR SLAB. SEE PARTITION DETAILS

7. UNLESS OTHERWISE NOTED, INTERIOR STUDS SHALL BE FULL HEIGHT FROM FLOOR TO UNDERSIDE OF STRUCTURE. PROVIDE FIREBLOCKING AS REQUIRED. WHERE PARTITIONS ARE UNABLE TO EXTEND FULL HEIGHT DUE TO ABOVE CEILING OBSTRUCTIONS, THE CONTRACTOR SHALL PROVIDE OFFSETS AS REQUIRED FOR CONTINUATION OF PARTITION. ANY SUCH OFFSETS SHALL BE REVIEWED BY THE ARCHITECT BEFORE INSTALLATION.

8. MAINTAIN HOURLY RATING AT PARTITIONS WITH RECESSED EQUIPMENT.

9. OUTLET BOXES ON OPPOSITE SIDES OF FIRE RATED WALLS SHALL BE SEPARATED BY 24" MINIMUM HORIZONTAL DISTANCE.

10. FOR LOCATIONS OF FIRE RATED PARTITIONS SEE PARTITION KEY ON PLANS. ALL FIRE RATED PARTITIONS SHALL BE FULLY SEALED AND FIRE STOPPED AT CONNECTION TO UNDERSIDE OF STRUCTURE. THROUGH PENETRATIONS, INCLUDING ELECTRICAL CONDUITS, SHOULD BE FIRE STOPPED IN APPROVED MANNER. MEMBRANE PENETRATIONS, LIKEWISE. MAINTAIN HOURLY RATING AT ALL RECESSED EQUIPMENT.

11. USE GALV. MTL. STUDS AND CHANNELS AT EXT. WALLS, TOILET ROOMS, AND WALLS WITH SINKS.

12. CONTRACTOR SHALL DETERMINE INTERIOR STUD GAUGES AND SPACING BASED ON VERTICAL USING THE FOLLOWING DEFLECTION CRITERIA:
- A. GYPSUM BOARD: L/240
- B. TILE OVER ALL SUBSTRATES: L/360
- C. GYPSUM BOARD CEILING: L/360

13. PROVIDE WD BLOCKING (AT WD STUD PARTITIONS) OR 16 GAUGE OR HEAVIER METAL BACKING (AT METAL STUD PARTITIONS) AT ALL WALL OR CEILING MOUNTED ITEMS INCLUDING BUT NOT LIMITED TO HANDRAILS, GRAB BARS, CABINETRY, BULLETIN BOARDS, EQUIPMENT, SHELVING, SIGNAGE ETC.

14. CONTRACTOR SHALL DETERMINE REQUIREMENT FOR HORIZONTAL CHANNEL REINFORCEMENT AT STUD WALLS AND PARTITIONS

15. PROVIDE DEFLECTION HEADS AT TOP OF ALL MTL. STUD WALLS.

16. MAXIMUM WOOD OR MTL. STUD SPACING TO BE 16" O.C. & MIN. MTL STUD GA TO BE 20.

17. FOR LOCATIONS OF SOUND RATED PARTITIONS SEE PARTITION KEY ON PLANS. AT SOUND RATED PARTITIONS
- A. SEAL ALL SOUND RATED PARTITIONS AIR TIGHT WITH ACOUSTICAL SEALANT INCLUDING DRYWALL INTERSECTIONS AT PARTITION HEAD, SILL AND AT ALL PENETRATIONS.
- B. FILL ALL SOUND RATED PARTITION FRAMING CAVITIES WITH FIBERGLASS BATT INSULTATION.
- C. DO NOT BRIDGE ACROSS DOUBLE STUD FRAMING WITH ANY RIGID MEMBERS.
- D. INSTALL ACOUSTICAL UNDERLAYMENTS WITH TAPED SEAMS AND WRAPPED UP AT THE EDGES TO COMPLETELY ISOLATE THE GYPSUM CEMENT

GENERAL NOTES - SECTION

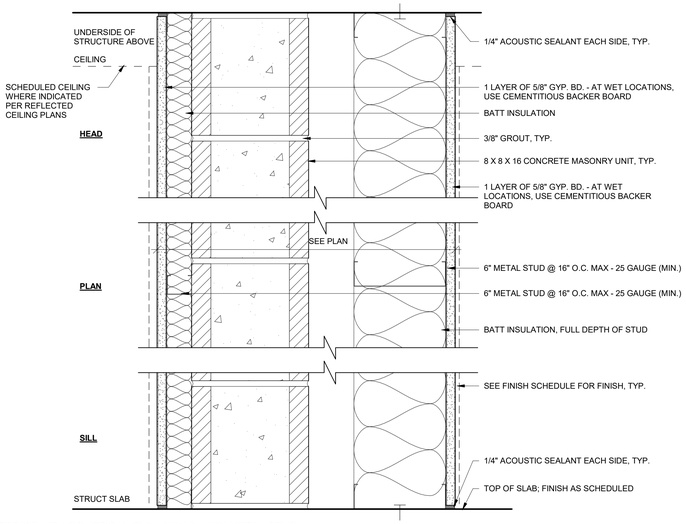

7 INTERIOR NR ACOUSTICAL CMU W/ 6" & 1 5/8" METAL STUD CHASE PARTITION
3" = 1'-0"

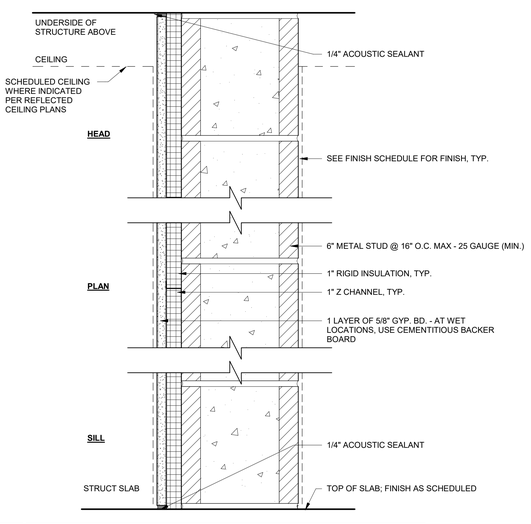

4- INTERIOR NR ACOUSTICAL CMU W/ 1" Z CHANNEL PARTITION
3" = 1'-0"

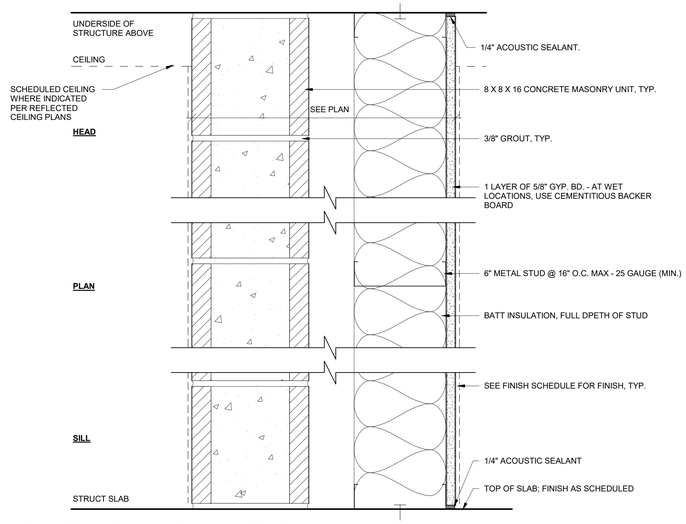

6 INTERIOR NR ACOUSTICAL CMU W/ 6" METAL STUD CHASE WALL
3" = 1'-0"

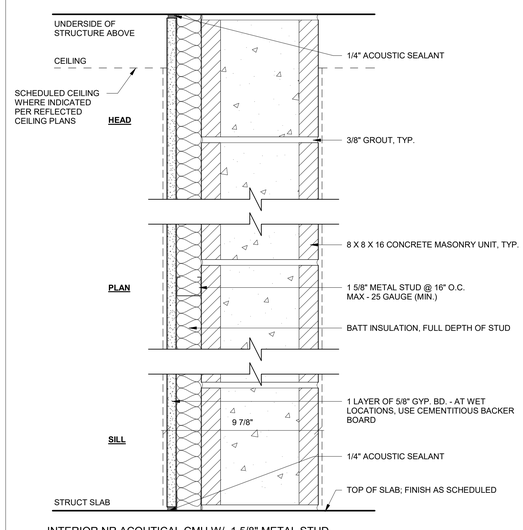

4 INTERIOR NR ACOUTICAL CMU W/ 1 5/8" METAL STUD PARTITION
3" = 1'-0"

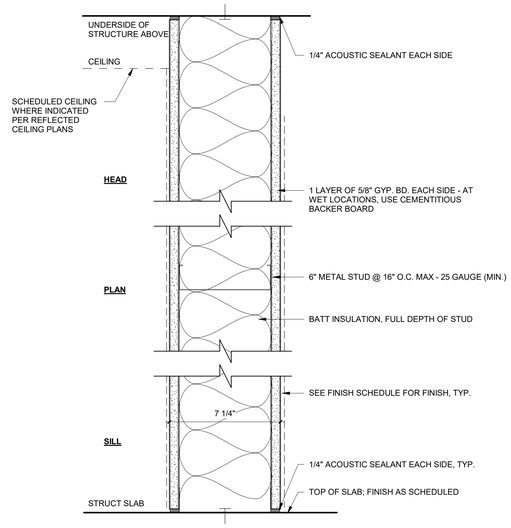

2 INTERIOR 6" NR ACOUSTICAL METAL STUD PARTITION
3" = 1'-0"

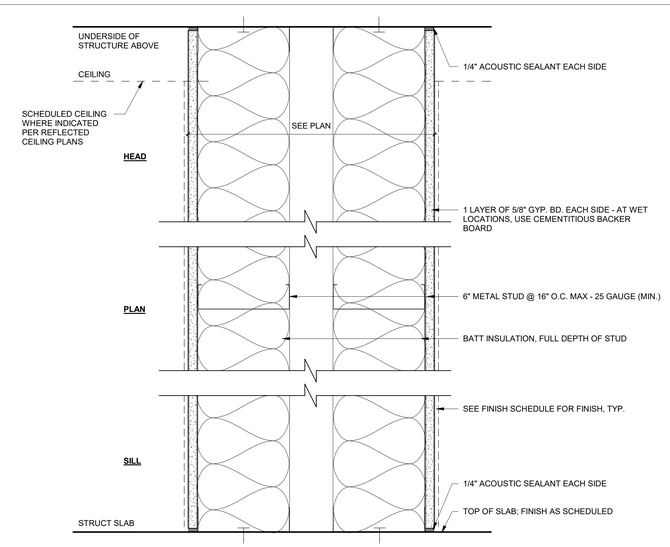

5 INTERIOR NR ACOUSTICAL 6" METAL STUD CHASE PARTITION
3" = 1'-0"

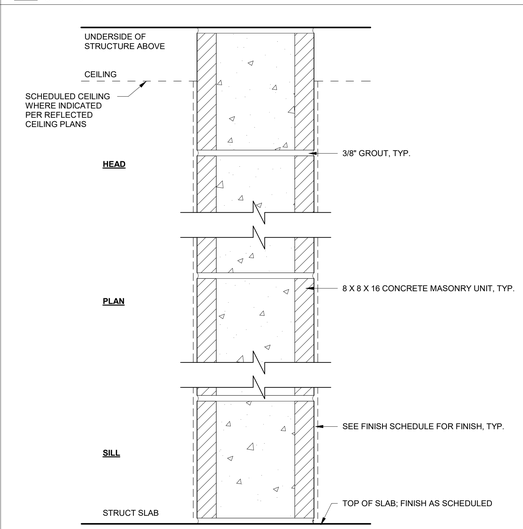

3 INTERIOR CMU WALL
3" = 1'-0"

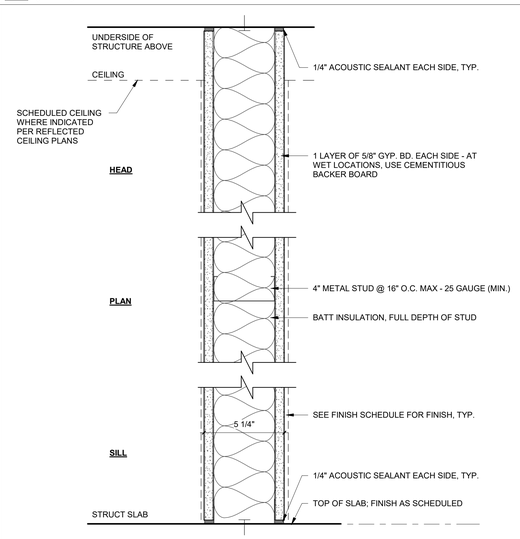

1 INTERIOR NR ACOUSTICAL 4" METAL STUD PARTITION
3" = 1'-0"

els architecture+ urban design
2040 Addison St, Berkeley, CA 94704
510.549.2929 | elsarch.com

PROJECT:

PIEDMONT COMMUNITY POOL

777 MAGNOLIA AVENUE
PIEDMONT, CA 94611

CLIENT:

CITY OF PIEDMONT

120 VISTA AVENUE PIEDMONT, CA 94611

PROJECT TEAM:

ARCHITECT:
ELS ARCHITECTURE AND URBAN DESIGN
2040 Addison Street
Berkeley, CA 94704
P: 510.549.2929

CIVIL ENGINEER:
BKF ENGINEERS
4670 Willow Road, Suite 250
Pleasanton, CA 94588
P: (925) 396-7704

LANDSCAPE ARCHITECT:
SWA
2200 Bridgeway
Sausalito, CA 94965
P: 415.332.5100

STRUCTURAL ENGINEER:
FORELL/ELSESSER ENGINEERS, INC.
160 Pine Street, 6th Floor
San Francisco, CA 94111
P: 415.837.0700

MEP / FIRE PROTECTION:
GUTTMANN & BLAEVOET
1620 Montgomery Street, Suite 230
San Francisco, CA 94111
P: 415.655.4000

AQUATICS:
AQUATICS DESIGN GROUP
2226 Faraday Avenue
Carlsbad, CA 92008
P: 760.438.8400

SPECIFICATIONS
TOPFLIGHT SPECS
49 Geary Street, Suite 230
San Francisco, CA 94108-5748
P: 415.546.6033

REVISION

NUMBER	DATE	DESCRIPTION

ISSUE:
100% DESIGN DEVELOPMENT

DATE:
APRIL 30, 2022

STAMP:

NOT FOR CONSTRUCTION

SHEET TITLE:

INTERIOR PARTITION TYPES

SHEET NUMBER:

A900

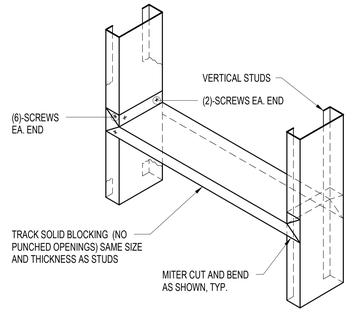

20 TYP BLOCKING DETAIL
1" = 1'-0"

MS-10

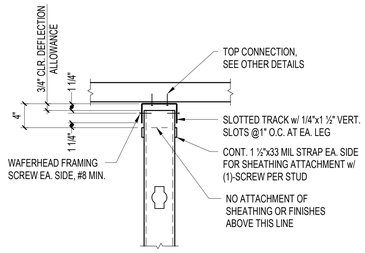

16 TYP TOP CONNECTION AT SLOTTED TRACK
1" = 1'-0"

MS-12

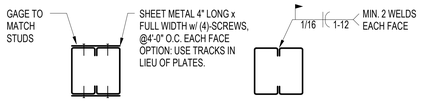

12 TYP DOUBLE STUD STITCH DETAIL
1" = 1'-0"

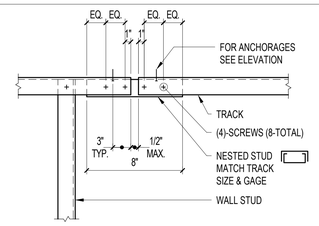

7 TYP TOP & BOTTOM TRACK SPLICE
1" = 1'-0"

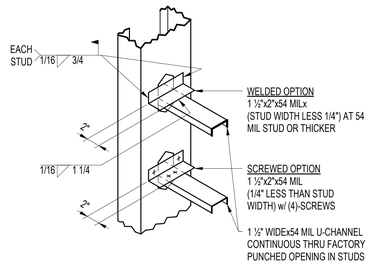

MS-07

19 TYP BRIDGING DETAIL
1" = 1'-0"

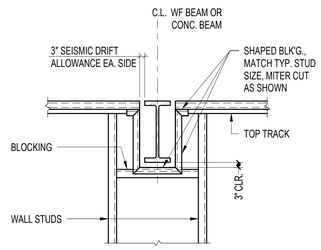

MS-13

15 TYP METAL STUD WALL CONNECTION @ BEAM
1" = 1'-0"

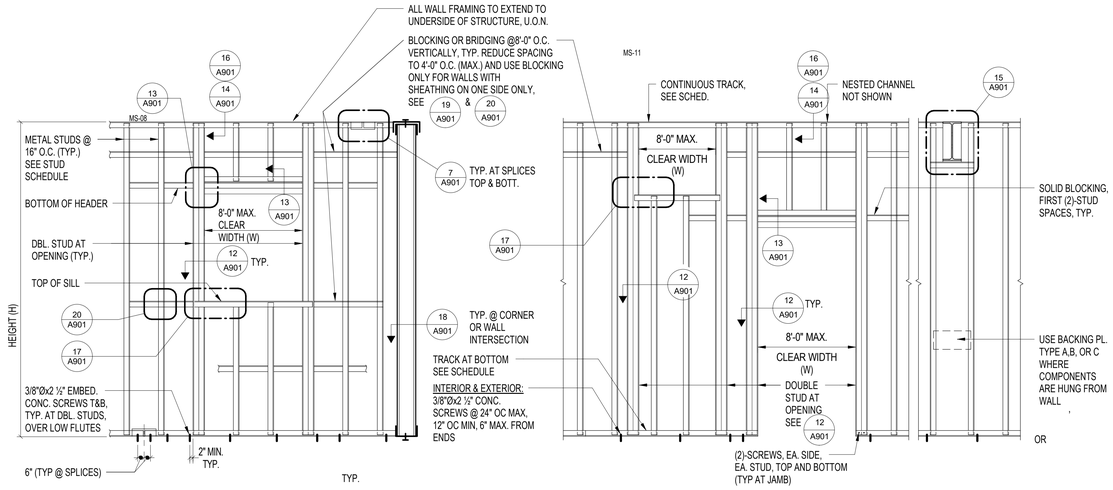

11 TYP NON-BEARING METAL STUD WALL FRAMING
1" = 1'-0"

MS-02

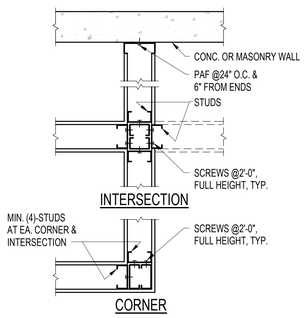

MS-09

18 TYP PLAN DETAIL AT WALL INTERSECTIONS, CORNERS
1" = 1'-0"

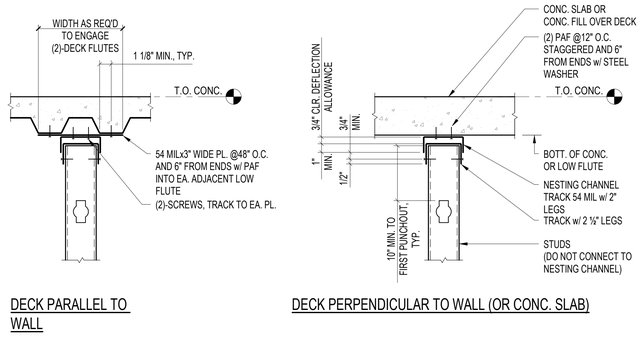

MS-03

14 TYP TOP OF NON-BEARING WALL_CONCRETE FILL
1" = 1'-0"

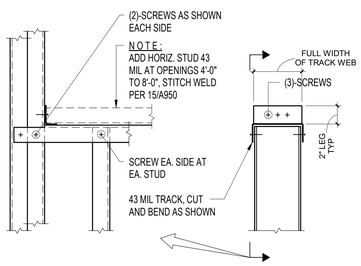

MS-06

17 TYP SILL DETAIL
1" = 1'-0"

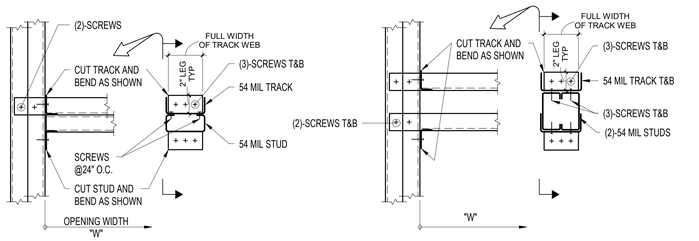

NOTE: AT LOCATIONS WHERE "W" IS BETWEEN 8'-0" AND 16'-0":
-USE (2) 68 MIL STUDS AND (2) 68 MIL TRACKS IN HEADER
-USE (5) SCREWS TOP AND BOTTOM IN HEADER
-USE (3) STUDS AT JAMBS

MS-04

13 TYP HEADER TO JAMB CONNECTION DETAILS
1" = 1'-0"

INTERIOR NON-BEARING METAL STUD FRAMING GENERAL NOTES

1. SEE SPECIFICATIONS FOR ADDITIONAL REQUIREMENTS.

2. DESIGN CRITERIA:
   a. VERTICAL DEFLECTION ALLOWANCE AT TOP OF NON-BEARING WALL = 3/4"
   b. DEFLECTION CRITERIA FOR STUD/JOIST DESIGN = L/240
   c. MINIMUM LATERAL LOAD FOR STUD WALLS = 5 PSF

3.THE DESIGN, INSTALLATION AND CONSTRUCTION OF COLD-FORMED STEEL FRAMING SHALL BE IN ACCORDANCE WITH AISI - NORTH AMERICAN SPECIFICATION FOR THE DESIGN OF COLD-FORMED STEEL STRUCTURAL MEMBERS, AISI - GENERAL PROVISIONS, AISI - HEADER DESIGN. AISI-TRUSS DESIGN, AISI - WALL STUD DESIGN, AND AISI LATERAL DESIGN.

4.ALL PRODUCTS SHALL BE MANUFACTURED BY CURRENT MEMBERS OF THE STEEL STUD MANUFACTURERS ASSOCIATION (SSMA) PER ICC-ES REPORT ESR-3064P EXCEPT SLOTTED TRACK SHALL BE MANUFACTURED BY "SLIPTRACK SYSTEMS, INC' PER ICC ESR-1042.

5.PROVIDE ALL ACCESSORIES INCLUDING, BUT NOT LIMITED TO, TRACKS, CLIPS, WEB STIFFENERS, ANCHORS, FASTENING DEVICES, RESILIENT CLIPS, AND OTHER ACCESSORIES REQUIRED FOR A COMPLETE AND PROPER INSTALLATION, AND AS RECOMMENDED BY THE MANUFACTURER FOR THE STEEL MEMBERS USED.

6.ALL STEEL MEMBERS AND COMPONENTS SHALL BE GALVANIZED.

7.ALL STEEL MEMBERS 43 MIL OR LIGHTER SHALL BE MANFACTURED PER ASTM A653 SS, GRADE 33 AND 54 MIL OR HEAVIER PER ASTM A653 SS, GRADE 50, CLASS I.

8.CONVERSION OF (GA.) TO (MIL) ARE AS FOLLOWS:

GAGE DESIGNATION	MIN. UNCOATED THICKNESS
25 GA.	18 MIL = 0.018"
22 GA.	27 MIL = 0.027"
20 GA STRUCTURAL	33 MIL = 0.033"
18 GA.	43 MIL = 0.043"
16 GA.	54 MIL = 0.054"
14 GA.	68 MIL = 0.068"
12 GA	97 MIL = 0.097"

9.ALL STEEL MEMBERS SHALL HAVE THE MINIMUM EFFECTIVE STRUCTURAL SECTION PROPERTIES AS GIVEN IN TABLES AND SCHEDULES.

10.ALL STUDS/JOISTS SHALL HAVE WEB PUNCH-OUTS AT 24" OC AT MID-DEPTH, PUNCH-OUTS SHALL NOT EXCEED HALF THE MEMBER DEPTH (D/2) OR 2 ½" IN WIDTH, WHICHEVER IS LESS, & 4 ½" IN LENGTH.

11. OPENINGS IN STUD AND JOIST WEBS OTHER THAN STANDARD HOLES PUNCHED BY MANUFACTURER ARE PROHIBITED UNLESS SPECIFICALLY DETAILED AND APPROVED.

12. STANDARD PRE-PUNCHED HOLES IN STUDS AND TRACKS SHALL BE LOCATED AWAY FROM CONNECTIONS AND SHALL BE 10" MIN. FROM ENDS OF MEMBERS UNLESS OTHERWISE NOTED.

13.TRACK SHALL MATCH STUD/JOIST DEPTH & GAGE, AND FLANGE WIDTH SHALL BE 1¼" MIN., TYP, UNO. ALL TRACKS TO BE UNPUNCHED WITH SOLID WEBS.

14. LATERAL BRIDGING SHALL BE PROVIDED WHEN SHEATHING DOES NOT CONTINUE FULL-HEIGHT ON BOTH SIDES OF FRAMING. BRIDGING SHALL BE INSTALLED IN A MANNER TO PROVIDE RESISTANCE TO BOTH MINOR AXIS BENDING AND ROTATION.

15.FASTENING OF FRAMING COMPONENTS SHALL BE WITH SELF-DRILLING SELF- TAPPING SCREWS OR WELDING. WHERE DETAILS CALL FOR SCREWS, THE MINIMUM SIZES SHALL BE AS FOLLOWS, UNO.

18 MIL	#6
27 MIL	#8
33 MIL	#8
43 MIL	#10
54 MIL	#10
68 MIL	#12
97 MIL	#12

SCREW SIZE IS DETERMINED BY THE GAGE OF THE THICKEST PART BEING JOINED, U.O.N. INSTALL SCREWS WITH THE HEAD IN CONTACT WITH THE THINNEST PART BEING JOINED, U.O.N. AS AN ALTERNATE, STEEL MEMBERS 54 MIL OR HEAVIER MAY BE WELDED WITH A 1/2" LONG WELD (FILLET OR FLARE GROOVE) IN LIEU OF EA. SCREW, TYP., U.O.N.

16.SCREW SPACING AND EDGE DISTANCE SHALL NOT BE LESS THAN 3 X D (D = NOMINAL SCREW DIAMETER).

17.ALL SCREWS SHALL CONFORM WITH ASTM C1513 AND HAVE A CORROSION-RESISTANT COATING. SCREWS USED FOR EXTERIOR FACADE AND/OR OTHER EXTERIOR APPLICATIONS SHALL BE ELCO DRIL-FLEX WITH STALGARD FINISH IN ACCORDANCE WITH ICC ESR-3332.

18.SCREW SIZES SHALL CONFORM TO THE DETAILS AND SHALL BE INSTALLED IN ACCORDANCE WITH MANUFACTURER'S REQUIREMENTS AND THE FOLLOWING: ALL SCREWS SHALL BE SELF-TAPPING SCREWS. SCREW THREADS SHALL TAP INTO AND SHALL ENGAGE THE ENTIRE THICKNESS OF ALL PIECES BEING JOINED, AND NOT LESS THAN THREE COMPLETE THREADS SHALL PENETRATE BEYOND THE METAL JOINED. SELF-DRILLING SCREWS MAY BE USED PROVIDED THE DRILL POINT IS SIZED SO DRILLING IS COMPLETED BEFORE THE LEAD THREADS OF THE SCREW BEGIN ENGAGING METAL. WHERE THE DRAWINGS CALL FOR A SCREW SIZE THAT DOES NOT HAVE A DRILL POINT OF SUFFICIENT LENGTH, INCREASE THE SCREW SIZE TO COMPLY WITH THESE REQUIREMENTS. PRE-DRILLED HOLE DIAMETERS SHALL NOT EXCEED THE DIAMETER OF THE DRILL POINT FOR ANY SELF DRILLING SCREWS PROPOSED. OVER-SIZED PRE-DRILLED HOLES ARE NOT PERMITTED.

19.FASTENING OF SHEATHING SHALL BE WITH SELF-DRILLING SELF-TAPPING SCREWS, #6 MIN FOR GYPSUM BOARD & #8 MIN FOR STRUCTURAL PANELS. ALL SCREW HEADS SHALL BE FLAT-PROFILE TYPE.

20.PAF's (POWDER ACTUATED FASTENERS) INTO CONCRETE OR CONCRETE FILL OVER DECK SHALL BE 0.157" DIAMETER x 1". PAF's INTO STRUCTURAL STEEL AND POST-TENSIONED CONCRETE SHALL BE 0.157" DIAMETER x3/4". PAF's SHALL CONFORM TO ICC ESR-2269 OR ESR-2138.

21.CONCRETE SCREWS SHALL BE SIMPSON TITEN HD, ICC ESR-2713.

22.ALL WELDING SHALL CONFORM WITH AWS D1.3. ALL WELDING TO STRUCTURAL STEEL SHALL ALSO CONFORM WITH AWS D1.1. THE ELECTRODES USED FOR WELDING SHALL HAVE A MINIMUM YIELD STRENGTH OF 60 KSI. ALL WELDS OF GALVANIZED STEEL SHALL BE COATED WITH A ZINC-RICH PAINT.

23.WELDING IS ONLY PERMITTED ON MEMBERS 54 MIL OR THICKER.

24.NON-STRUCTURAL WALLS SUPPORTED AT THE BASE AND EXTENDING TO THE BOTTOM OF THE STRUCTURE ABOVE, SHALL HAVE SLOTTED TRACKS AT THE TOP OF INTERIOR WALLS, U.N.O.

25. AXIAL LOAD BEARING STUDS SHALL BE FULLY SEATED INTO THE WALL TRACKS ABOVE AND BELOW.

els architecture+ urban design
2040 Addison St, Berkeley, CA 94704
510.549.2929 | elsarch.com

PROJECT:

PIEDMONT COMMUNITY POOL

777 MAGNOLIA AVENUE PIEDMONT, CA 94611

CLIENT:

CITY OF PIEDMONT

120 VISTA AVENUE PIEDMONT, CA 94611

PROJECT TEAM:

ARCHITECT:
ELS ARCHITECTURE AND URBAN DESIGN
2040 Addison Street
Berkeley, CA 94704
P: 510.549.2929

CIVIL ENGINEER:
BKF ENGINEERS
4670 Willow Road, Suite 250
Pleasanton, CA 94588
P: (925) 396-7704

LANDSCAPE ARCHITECT:
SWA
2200 Bridgeway
Sausalito, CA 94965
P: 415.332.5100

STRUCTURAL ENGINEER:
FORELL/ELSESSER ENGINEERS, INC.
160 Pine Street, 6th Floor
San Francisco, CA 94111
P: 415.837.0700

MEP / FIRE PROTECTION:
GUTTMANN & BLAEVOET
1620 Montgomery Street, Suite 230
San Francisco, CA 94111
P: 415.655.4000

AQUATICS:
AQUATICS DESIGN GROUP
2226 Faraday Avenue
Carlsbad, CA 92008
P: 760.438.8400

SPECIFICATIONS
TOPFLIGHT SPECS
49 Geary Street, Suite 230
San Francisco, CA 94108-5748
P: 415.546.6033

REVISION

NUMBER	DATE	DESCRIPTION

ISSUE:
100% DESIGN DEVELOPMENT

DATE:
APRIL 30, 2022

STAMP:

NOT FOR CONSTRUCTION

SHEET TITLE:

INTERIOR PARTITION DETAILS - TYP. NON-BEARING

SHEET NUMBER:

A901

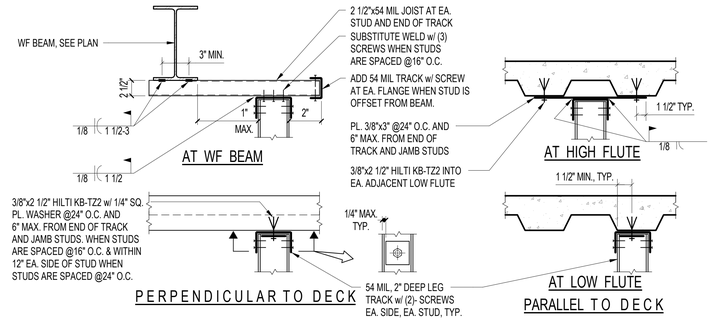

MS-32

12 TYP SUSPENDED STEEL STUD
1" = 1'-0"

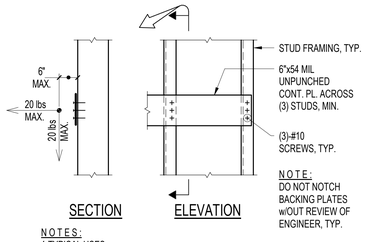

N O T E S :
1.TYPICAL USES:
MISCELLANEOUS ITEMS (EG WHITEBOARDS, SURFACE MOUNTED MIRRORS, TOWEL DISPENSERS, WALL MOUNTED DOOR STOP, ETC.)
2.ATTACH ACCESSORIES TO BACKING w/ #10 SCREWS, MIN.
3.MAXIMUM LOAD IS PER PLATE AND STUD SPACE.

NOTE:
DO NOT NOTCH BACKING PLATES w/OUT REVIEW OF ENGINEER, TYP.

MS-14

4 TYP BACKING PLATE_A
1" = 1'-0"

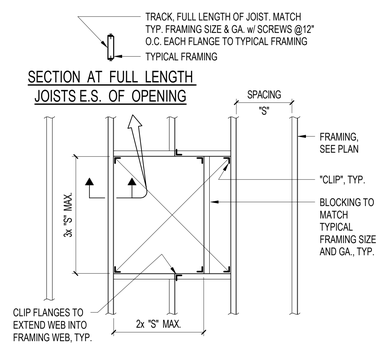

OPENINGS CUTTING FRAMING MEMBER

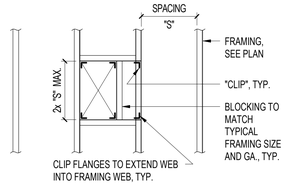

OPENINGS NOT CUTTING FRAMING MEMBER

N O T E :
"CLIP" REFERS TO 54 MIL L1 ½ x 1 ½ x (FRAMING DEPTH-1") w/ (1) SCREW PER 2" OF FRAMING DEPTH AT EACH LEG

MS-37

10 TYP STEEL JOIST CEILING FRAMING - OPENING
1" = 1'-0"

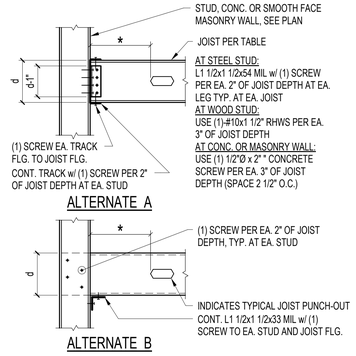

* INDICATES 2x d OR 12", WHICHEVER IS GREATER, MIN.
ALT: REINFORCE PUNCH-OUT PER TYPICAL DETAIL.

JOISTS PERPENDICULAR TO WAL

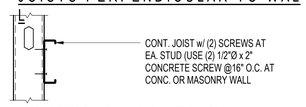

JOISTS PARALLEL TO WALL

SE TO REVIEW

MAX. SPAN	JOISTS @16" O.C. 'd' x GA	WEB STIFFENERS REQUIRED	MAX. BRIDGING SPACING	
			SHEATHING ON ONE SIDE	SHEATHING ON BOTH SIDES
8' - 0"	3 5/8" x 33 MIL	NO	4 ' - 0"	NONE
12' - 0"	6" x 43 MIL	NO	4 ' - 0"	NONE
12' - 0" <x<16'-0"	6" x 54 MIL	NO	4 ' - 0"	NONE
16' - 0"	8" x 43 MIL	NO	4 ' - 0"	MID - SPAN

N O T E :
• WALL STUDS SUPPORTING CEILING MEMBERS SHALL BE 33 MIL MIN.
• WHERE WEB STIFFENERS ARE REQUIRED, SEE TYPICAL DETAIL
• WHERE BRIDGING IS REQUIRED, SEE TYPICAL DETAIL.

6 TYP STEEL JOIST CEILING FRAMING
1" = 1'-0"

MS-36

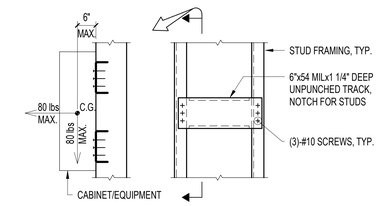

N O T E S :
1.TYPICAL USES:
WALL HUNG CABINETS & FULL HEIGHT CABINETS
2.ATTACH ACCESSORIES TO BACKING w/ #12 SCREWS, TYP.
3.MAXIMUM LOAD IS PER PLATE AND STUD SPACE.

MS-15

3 TYP BACKING PLATE_B
1" = 1'-0"

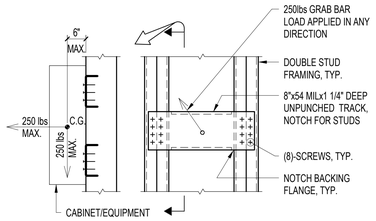

N O T E S :
1.TYPICAL USES:
WALL HUNG EQUIPMENT, GRAB BARS
2.ATTACH ACCESSORIES TO BACKING w/ #14 OR 1/4"Ø SCREWS, MIN.
3.MAXIMUM LOAD IS PER PLATE AND STUD SPACE.

2 TYP BACKING PLATE_C
1" = 1'-0"

MS-16

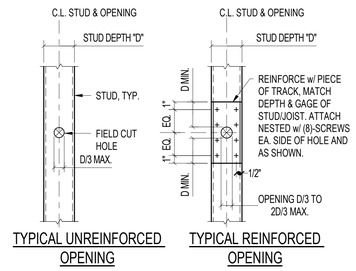

N O T E :
1. NO OPENINGS IN METAL STUD GREATER THAN 2D/3 ALLOWED.
2. DO NOT LOCATE OPENINGS AT BACKING PLATES.

MS-19

5 TYP OPENING IN METAL STUD DET/JOIST
1" = 1'-0"

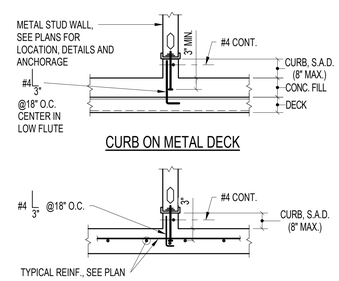

C2-16

1 CONCRETE CURB DETAIL - SOG & METAL DECK
1" = 1'-0"

els architecture+ urban design
2040 Addison St, Berkeley, CA 94704
510.549.2929 | elsarch.com

PROJECT:

PIEDMONT COMMUNITY POOL

777 MAGNOLIA AVENUE PIEDMONT, CA 94611

CLIENT:

CITY OF PIEDMONT

120 VISTA AVENUE PIEDMONT, CA 94611

PROJECT TEAM:

ARCHITECT:
ELS ARCHITECTURE AND URBAN DESIGN
2040 Addison Street
Berkeley, CA 94704
P: 510.549.2929

CIVIL ENGINEER:
BKF ENGINEERS
4670 Willow Road, Suite 250
Pleasanton, CA 94588
P: (925) 396-7704

LANDSCAPE ARCHITECT:
SWA
2200 Bridgeway
Sausalito, CA 94965
P: 415.332.5100

STRUCTURAL ENGINEER:
FORELL/ELSESSER ENGINEERS, INC.
160 Pine Street, 6th Floor
San Francisco, CA 94111
P: 415.837.0700

MEP / FIRE PROTECTION:
GUTTMANN & BLAEVOET
1620 Montgomery Street, Suite 230
San Francisco, CA 94111
P: 415.655.4000

AQUATICS:
AQUATICS DESIGN GROUP
2226 Faraday Avenue
Carlsbad, CA 92008
P: 760.438.8400

SPECIFICATIONS
TOPFLIGHT SPECS
49 Geary Street, Suite 230
San Francisco, CA 94108-5748
P: 415.546.6033

REVISION

NUMBER	DATE	DESCRIPTION

ISSUE:
100% DESIGN DEVELOPMENT

DATE:
APRIL 30, 2022

STAMP:

NOT FOR CONSTRUCTION

SHEET TITLE:

INTERIOR PARTITION DETAILS - TYP. NON-BEARING

SHEET NUMBER:

A902

MAXIMUM HEIGHT (FEET)	SSMA PRODUCT IDENTIFICATION	MINIMUM STUD PROPERTIES						
		DEPTH	FLANGE WIDTH	THICKNESS (MIN.)	SPACING (U.O.N.)	Sx MIN.	Ix MIN.	NOTES
24' - 11"	600S137-33	6"	1 3/8"	33 MIL	16"	0.527	1.582	
27' - 2"	600S137-43	6"	1 3/8"	43 MIL	16"	0.681	2.042	
29' - 2"	600S137-54	6"	1 3/8"	54 MIL	16"	0.839	2.518	
31' - 3"	600S137-68	6"	1 3/8"	68 MIL	16"	1.031	3.094	

NOTES:

1. 5 PSF MAX. ASD LOADING.
2. L/240 DEFLECTION LIMIT.

5 SCHEDULE - 6" INTERIOR NON-BEARING METAL STUD
1" = 1'-0"

MS-23

MAXIMUM HEIGHT (FEET)	SSMA PRODUCT IDENTIFICATION	MINIMUM STUD PROPERTIES						
		DEPTH	FLANGE WIDTH	THICKNESS (MIN.)	SPACING (U.O.N.)	Sx MIN.	Ix MIN.	NOTES
18' - 1"	400S137-33	4"	1 3/8"	33 MIL	16"	0.301	0.603	33 KSI
19' - 8"	400S137-43	4"	1 3/8"	43 MIL	16"	0.388	0.776	33 KSI
21' - 1"	400S137-54	4"	1 3/8"	54 MIL	16"	0.327	0.676	50 KSI
22' - 7"	400S137-68	4"	1 3/8"	68 MIL	16"	0.477	0.953	50 KSI

NOTES:

1. 5 PSF MAX. ASD LOADING.
2. L/240 DEFLECTION LIMIT.

1 SCHEDULE - 4" INTERIOR - NON BEARING STUD
N.T.S

MS-21

MINIMUM STUD PROPERTIES					
SSMA OR SLIPTRACK PRODUCT IDENTIFICATION	DEPTH	FLANGE WIDTH	THICKNESS (MIN.)	Sx MIN.	Ix MIN.
600T150-33	6"	1 1/2"	33 MIL	0.517	1.590
600T150-43	6"	1 1/2"	43 MIL	0.673	2.072
600T150-54	6"	1 1/2"	54 MIL	0.843	2.611
SLIPTRACK 6.0000-33	6"	2 1/2"	33 MIL	0.068	0.215
SLIPTRACK 6.0000-43	6"	2 1/2"	43 MIL	0.089	0.298
SLIPTRACK 6.0000-54	6"	2 1/2"	54 MIL	0.111	0.374
SLIPTRACK 6.0000-68	6"	2 1/2"	68 MIL	0.140	0.472

MS-24

6 SCHEDULE - MINIMUM TRACK PROPERTIES - 6" NON-BEARING METAL STUD
1" = 1'-0"

MINIMUM TRACK PROPERTIES					
SSMA OR SLIPTRACK PRODUCT IDENTIFICATION	DEPTH	FLANGE WIDTH	THICKNESS (MIN.)	Sx MIN.	Ix MIN.
400T150-33	4"	1 1/2"	33 MIL	0.300	0.622
400T150-43	4"	1 1/2"	43 MIL	0.390	0.811
400T150-54	4"	1 1/2"	54 MIL	0.489	1.025
400T150-68	4"	1 1/2"	68 MIL	0.615	1.306
SLIPTRACK 4.0000-33	4"	2 1/2"	33 MIL	0.067	0.203
SLIPTRACK 4.0000-43	4"	2 1/2"	43 MIL	0.088	0.268
SLIPTRACK 4.0000-54	4"	2 1/2"	54 MIL	0.111	0.335
SLIPTRACK 4.0000-68	4"	2 1/2"	68 MIL	0.139	0.419

MS-22

2 SCHEDULE - MININUM TRACK PROPERTIES - 4" NON-BEARING STUD
N.T.S

MAXIMUM HEIGHT (FEET)	SSMA PRODUCT IDENTIFICATION	MINIMUM STUD PROPERTIES						
		DEPTH	FLANGE WIDTH	THICKNESS (MIN.)	SPACING (U.O.N.)	Sx MIN.	Ix MIN.	NOTES
10' - 10"	600S137-33	6"	1 3/8"	33 MIL	16"	0.527	1.582	33 KSI
13' - 0"	600S137-43	6"	1 3/8"	43 MIL	16"	0.681	2.042	33 KSI
17' - 2"	600S137-54	6"	1 3/8"	54 MIL	16"	0.839	2.518	33 KSI
18' - 5"	600S137-68	6"	1 3/8"	68 MIL	16"	1.031	3.094	33 KSI

NOTES:

1. 35 PSF ASD LOADING.
2. L/240 DEFLECTION LIMIT.

7 SCHEDULE - 6" EXTERIOR NON-BEARING METAL STUD
N.T.S

MS-29

MAXIMUM HEIGHT (FEET)	SSMA PRODUCT IDENTIFICATION	MINIMUM STUD PROPERTIES						
		DEPTH	FLANGE WIDTH	THICKNESS (MIN.)	SPACING (U.O.N.)	Sx MIN.	Ix MIN.	NOTES
16' - 9"	362S137-33	3 5/8"	1 3/8"	33 MIL	16"	0.264	0.479	
18' - 3"	362S137-43	3 5/8"	1 3/8"	43 MIL	16"	0.340	0.616	
17' - 1"	362S137-54	3 5/8"	1 3/8"	54 MIL	16"	0.417	0.756	
20' - 10"	362S137-68	3 5/8"	1 3/8"	68 MIL	16"	0.509	0.922	

NOTES:

1. 5 PSF MAX. ASD LOADING.
2. L/240 DEFLECTION LIMIT.

3 SCHEDULE - 3-5/8" INTERIOR NON-BEARING METAL STUD
1" = 1'-0"

MS-25

MAXIMUM HEIGHT (FEET)	SSMA PRODUCT IDENTIFICATION	MINIMUM STUD PROPERTIES						
		DEPTH	FLANGE WIDTH	THICKNESS (MIN.)	SPACING (U.O.N.)	Sx MIN.	Ix MIN.	NOTES
15' - 0"	800S137-43	8"	1 3/8"	43 MIL	16"	1.033	4.134	50 KSI
20' - 2"	800S137-54	8"	1 3/8"	54 MIL	16"	1.277	5.110	50 KSI
23' - 4"	800S137-68	8"	1 3/8"	68 MIL	16"	1.576	6.303	50 KSI

NOTES:

1. 35 PSF ASD LOADING.
2. L/240 DEFLECTION LIMIT.

MS-30

8 SCHEDULE - 8" EXTERIOR NON-BEARING METAL STUD
N.T.S

MINIMUM TRACK PROPERTIES					
SSMA OR SLIPTRACK PRODUCT IDENTIFICATION	DEPTH	FLANGE WIDTH	THICKNESS (MIN.)	Sx MIN.	Ix MIN.
362T150-33	3 5/8"	1 1/2"	33 MIL	0.264	0.499
362T150-43	3 5/8"	1 1/2"	43 MIL	0.343	0.650
362T150-54	3 5/8"	1 1/2"	54 MIL	0.431	0.823
362T150-68	3 5/8"	1 1/2"	68 MIL	0.542	1.050
SLIPTRACK 3.6250-33	3 5/8"	2 1/2"	33 MIL	0.067	0.200
SLIPTRACK 3.6250-43	3 5/8"	2 1/2"	43 MIL	0.088	0.260
SLIPTRACK 3.6250-54	3 5/8"	2 1/2"	54 MIL	0.110	0.325
SLIPTRACK 3.6250-68	3 5/8"	2 1/2"	68 MIL	0.138	0.406

MS-26

4 SCHEDULE - MINIMUM TRACK PROPERTIES - 3-5/8" NON-BEARING METAL STUD Copy 1
1" = 1'-0"

els architecture+ urban design
2040 Addison St, Berkeley, CA 94704
510.549.2929 | elsarch.com

PROJECT:

PIEDMONT COMMUNITY POOL

777 MAGNOLIA AVENUE PIEDMONT, CA 94611

CLIENT:

CITY OF PIEDMONT

120 VISTA AVENUE PIEDMONT, CA 94611

PROJECT TEAM:

ARCHITECT:
ELS ARCHITECTURE AND URBAN DESIGN
2040 Addison Street
Berkeley, CA 94704
P: 510.549.2929

CIVIL ENGINEER:
BKF ENGINEERS
4670 Willow Road, Suite 250
Pleasanton, CA 94588
P: (925) 396-7704

LANDSCAPE ARCHITECT:
SWA
2200 Bridgeway
Sausalito, CA 94965
P: 415.332.5100

STRUCTURAL ENGINEER:
FORELL/ELSESSER ENGINEERS, INC.
160 Pine Street, 6th Floor
San Francisco, CA 94111
P: 415.837.0700

MEP / FIRE PROTECTION:
GUTTMANN & BLAEVOET
1620 Montgomery Street, Suite 230
San Francisco, CA 94111
P: 415.655.4000

AQUATICS:
AQUATICS DESIGN GROUP
2226 Faraday Avenue
Carlsbad, CA 92008
P: 760.438.8400

SPECIFICATIONS
TOPFLIGHT SPECS
49 Geary Street, Suite 230
San Francisco, CA 94108-5748
P: 415.546.6033

REVISION

NUMBER	DATE	DESCRIPTION

ISSUE:
100% DESIGN DEVELOPMENT

DATE:
APRIL 30, 2022

STAMP:

NOT FOR CONSTRUCTION

SHEET TITLE:

SCHEDULE - TYPICAL NON-BEARING LIGHT GAUGE

SHEET NUMBER:

A903

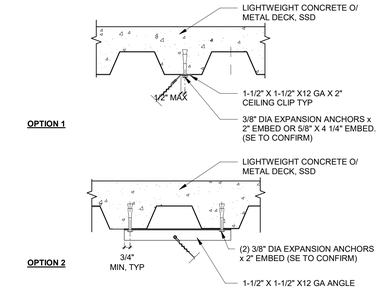

NOTES
1. POST INSTALLED ANCHORS TO BE PLACED NO MORE THAN 1" OFFSET FROM CENTERLINE OF DECK LOW FLUTE
2. LOAD TEST WHEN DRILLED-IN CONCRETE ANCHORS OR PAF ARE USED IN REINFORCED CONCRETE FOR HANGER WIRES, 1 OUT OF 10 WIRE/ ANCHOR ASSEMBLIES SHALL BE FIELD TESTED FOR 200 LBS. IN TENSION. WHEN DRILLED-IN CONCRETE ANCHORS ARE USED FOR BRACING WIRES, 1 OUT OF 2 WIRE/ANCHOR ASSEMBLIES SHALL BE FIELD TESTED FOR 440 LBS. IN TENSION IN THE DIRECTION OF THE WIRE. PAF IN CONCRETE ARE NOT PERMITTED FOR BRACING WIRE

12 CEILING - BRACING WIRE TO CONCRETE OVER METAL DECK
1 1/2" = 1'-0"

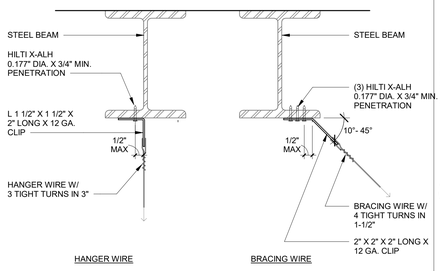

NOTES:

1. BEAM FLANGE THICKNESS SHALL NOT BE LESS THAN 3/16" OR MORE THAN 3/8"
2. RDP IN RESPONSIBLE CHARGE, OR AND CONTRACTOR SHALL VERIFY THAT NO PAF IS INSTALLED IN THE PROTECTED ZONE OF ANY STEEL MEMBER, SEE ANSI/AISC 341-10

8 CEILING - TYP WIRE ATTACHMET - STRUCTURAL STEEL
3" = 1'-0"

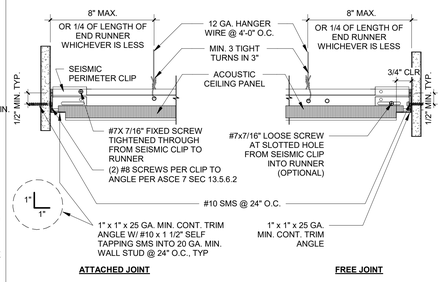

NOTES:
1. PROVIDE #12 GA. HANGER WIRES AT THE ENDS OF ALL MAIN AND CROSS RUNNERS WITHIN EIGHT (8) INCHES OF THE SUPPORT OR WITHIN ONE-FOURTH (1/4) OF THE LENGTH OF THE END TEE, WHICHEVER IS LESS, FOR THE PERIMETER OF THE CEILING AREA. PERIMETER WIRES ARE NOT REQUIRED WHEN THE LENGTH OF THE END TEE IS EIGHT (8) INCHES OR LESS.

4 CEILING PERIMETER DETAIL - SEISMIC CLIP
3" = 1'-0"

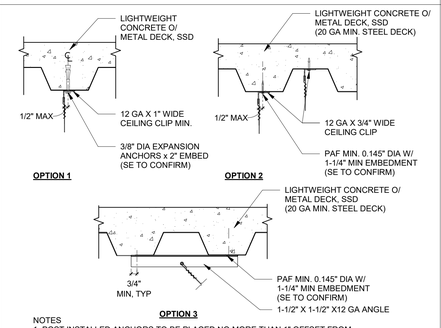

NOTES
1. POST INSTALLED ANCHORS TO BE PLACED NO MORE THAN 1" OFFSET FROM CENTERLINE OF DECK LOW FLUTE
2. LOAD TEST WHEN DRILLED-IN CONCRETE ANCHORS OR PAF ARE USED IN REINFORCED CONCRETE FOR HANGER WIRES, 1 OUT OF 10 WIRE/ ANCHOR ASSEMBLIES SHALL BE FIELD TESTED FOR 200 LBS. IN TENSION. WHEN DRILLED-IN CONCRETE ANCHORS ARE USED FOR BRACING WIRES, 1 OUT OF 2 WIRE/ANCHOR ASSEMBLIES SHALL BE FIELD TESTED FOR 440 LBS. IN TENSION IN THE DIRECTION OF THE WIRE. PAF IN CONCRETE ARE NOT PERMITTED FOR BRACING WIRE

11 CEILING - HANGER WIRE TO CONCRETE OVER METAL DECK
1 1/2" = 1'-0"

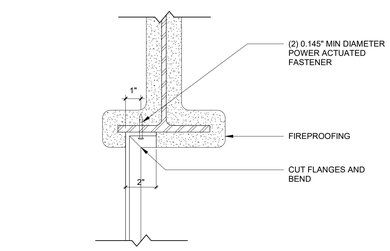

NOTES:

1. BEAM FLANGE THICKNESS SHALL NOT BE LESS THAN 3/16" OR MORE THAN 3/8"
2. RDP IN RESPONSIBLE CHARGE, OR AND CONTRACTOR SHALL VERIFY THAT NO PAF IS INSTALLED IN THE PROTECTED ZONE OF ANY STEEL MEMBER, SEE ANSI/AISC 341-10
3. FOR SUSPENDED GYP BD CEILING AND SUSPENDED ACOUSTIC CEILING

7 CEILING - STRUT CONNECTION - STRUCTURAL STEEL
3" = 1'-0"

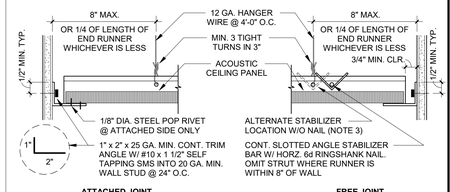

NOTES:
1. PROVIDE #12 GA HANGER WIRES AT THE ENDS OF ALL MAIN AND CROSS RUNNERS WITHIN EIGHT (8) INCHES OF THE SUPPORT OR WITHIN ONE-FOURTH (1/4) OF THE LENGTH OF THE END TEE, WHICHEVER IS LESS, FOR THE PERIMETER OF THE CEILING AREA. PERIMETER WIRES ARE NOT REQUIRED WHEN THE LENGTH OF THE END TEE IS EIGHT (8) INCHES OR LESS.
2. NAILS AT THE END OF HORIZONTAL STRUTS ARE TO BE PLACED WITH NAIL HEAD TOWARD CENTERLINE OF SPAN OF STRUT.
3. STABILIZER BAR MAY BE SLOTTED APPROVED ANGLES OR CHANNELS W/ "DIAMOND POINTS" OF SPRING STEEL WHICH SNAP TIGHT TO PREVENT MOVEMENT OF STRUT.
4. (1) #10 SMS TO 20 GA. MIN. WALL STUD @ 24" O.C.

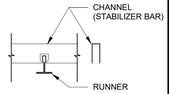

APPROVED STABILIZER

3 CEILING PERIMETER DETAILS - ACOUSTIC
3" = 1'-0"

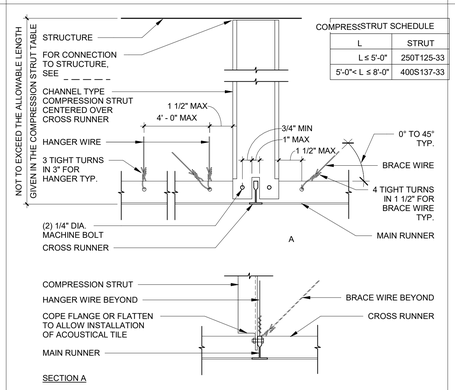

COMPRESSSTRUT SCHEDULE

L	STRUT
L ≤ 5'-0"	250T125-33
5'-0"< L ≤ 8'-0"	400S137-33

14 COMPRESSION STRUT DETAIL - CHANNEL TYPE
3" = 1'-0"

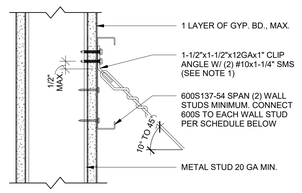

WALL STUD GAUGE	CONNECTION TO WALL STUD (WITH GYP. BD.)	CONNECTION TO WALL STUD (WITHOUT GYP. BD.)
20 GAUGE	(5) #10 X 1 1/14" SMS	(3) #10 X 1 1/14" SMS
18 GAUGE	(4) #10 X 1 1/14" SMS	(2) #10 X 1 1/14" SMS

NOTES:

THE CLIP ANGLE CAN BE ATTACHED DIRECTLY TO THE WALL STUD FLANGE PROVIDED BOTH OF THE FOLLOWING CONDITIONS ARE MET.
- THE WALL STUD IS 18 GA MIN. AND CAPABLE OF SUPPORTING THE BRACE FORCE.
- THE BRACE WIRE ALIGNS WITH THE WALL STUD WEB.

10 CEILING - BRACING WIRE TO METAL STUD WLL
3" = 1'-0"

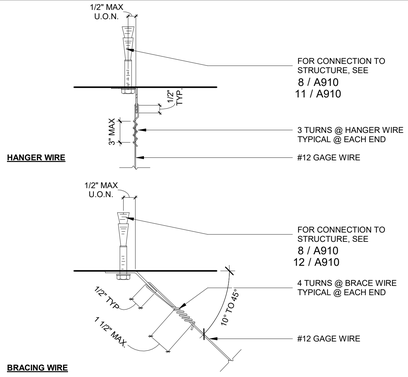

6 TYP WIRE TURNING - HANGING AND BRACING
3" = 1'-0"

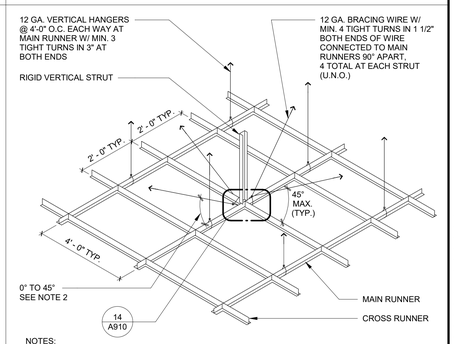

NOTES:

1. STRUTS SHALL NOT REPLACE HANGER WIRES.
2. THE MINIMUM ACCEPTABLE ANGLE IS DETERMINED SUCH THAT THE WIRES DO NOT INTERFERE WITH THE RUNNERS, LIGHT FIXTURES, ETC. AND REMAIN STRAIGHT AND UNOBSTRUCTED.

2 CEILING _TYP SUSPENSDED ACOUSTIC CLG
3" = 1'-0"

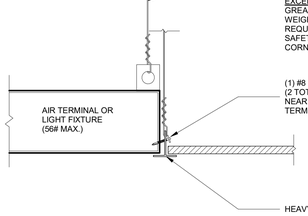

13 CEILING - AIR TERMINAL & LIGHT FIXTURES SUPPORT
3" = 1'-0"

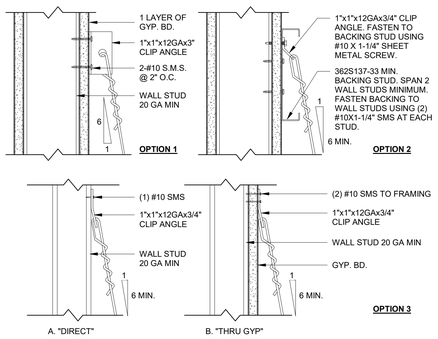

NOTES:
1. THIS IS APPLIED FOR PERIMETER WIRE ATTACHEMENT OR WHERE OBSTRUCTION PREVENTS ATTACHMENT TO STRUCTURE ABOVE

9 CEILING - HANGER WIRE CONNECTION TO METAL STUD WALL
3" = 1'-0"

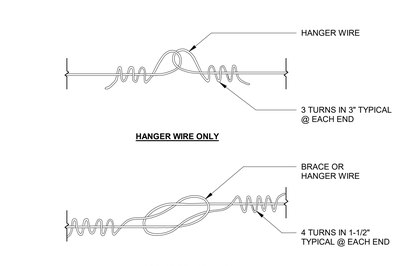

NOTES:
1. WIRE SPLICES ARE SHOWN LOOSELY TIED FOR ILLUSTRATIVE PURPOSES ONLY AND SHALL BE DRAWN TIGHT TO COMPLETE INSTALLATION WHEN CONSTRUCTED.

5 CEILING - WIRE SPLICES
3" = 1'-0"

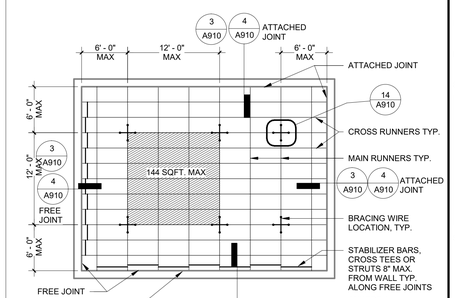

NOTE:
BRACING WIRES AND COMP. STRUT SHALL OCCUR AT EVERY 144 SQ.FT. MAX. IN ROOMS OVER 144 SQ.FT.

1 CEILING _12'x12' BRACE ASSEMBLY SPACING
3" = 1'-0"

els architecture+ urban design
2040 Addison St, Berkeley, CA 94704
510.549.2929 | elsarch.com

PROJECT:

PIEDMONT COMMUNITY POOL

777 MAGNOLIA AVENUE PIEDMONT, CA 94611

CLIENT:

CITY OF PIEDMONT

120 VISTA AVENUE PIEDMONT, CA 94611

PROJECT TEAM:

ARCHITECT:
ELS ARCHITECTURE AND URBAN DESIGN
2040 Addison Street
Berkeley, CA 94704
P: 510.549.2929

CIVIL ENGINEER:
BKF ENGINEERS
4670 Willow Road, Suite 250
Pleasanton, CA 94588
P: (925) 396-7704

LANDSCAPE ARCHITECT:
SWA
2200 Bridgeway
Sausalito, CA 94965
P: 415.332.5100

STRUCTURAL ENGINEER:
FORELL/ELSESSER ENGINEERS, INC.
160 Pine Street, 6th Floor
San Francisco, CA 94111
P: 415.837.0700

MEP / FIRE PROTECTION:
GUTTMANN & BLAEVOET
1620 Montgomery Street, Suite 230
San Francisco, CA 94111
P: 415.655.4000

AQUATICS:
AQUATICS DESIGN GROUP
2226 Faraday Avenue
Carlsbad, CA 92008
P: 760.438.8400

SPECIFICATIONS
TOPFLIGHT SPECS
49 Geary Street, Suite 230
San Francisco, CA 94108-5748
P: 415.546.6033

REVISION

NUMBER	DATE	DESCRIPTION

ISSUE:
100% DESIGN DEVELOPMENT

DATE:
APRIL 30, 2022

STAMP:

NOT FOR CONSTRUCTION

SHEET TITLE:
CEILING DETAILS - ACOUSTICAL

SHEET NUMBER:
A910

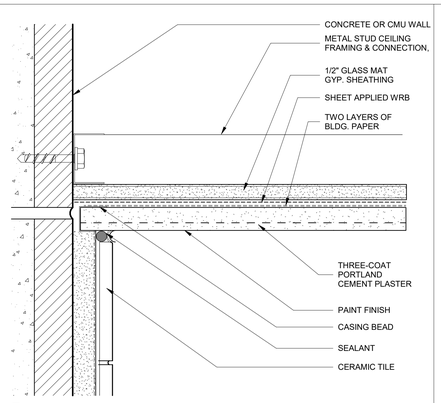

5 CEILING - TYP CEMENT PLASTER OVER MTL FRAMING
6" = 1'-0"

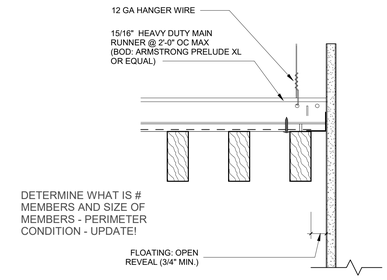

NOTE: FOR TYPICAL SUSPENSION DETAIL

4 CEILING - TYP WOOD GRILLE DETAIL PERIMETER
3" = 1'-0"

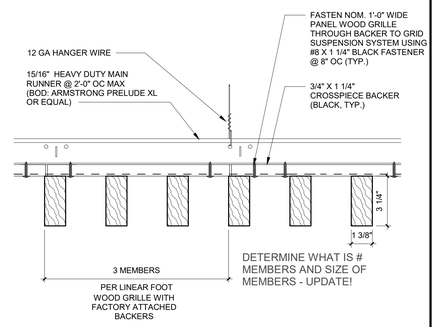

3 CEIILNG - TYP WOOD GRILLE DETAIL
3" = 1'-0"

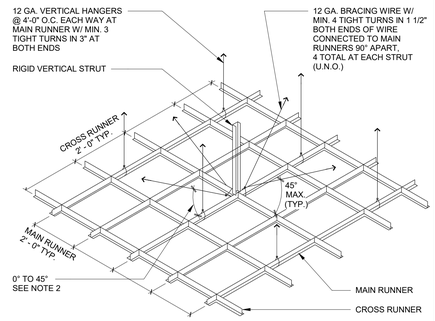

NOTES:

1. STRUTS SHALL NOT REPLACE HANGER WIRES.
2. THE MINIMUM ACCEPTABLE ANGLE IS DETERMINED SUCH THAT THE WIRES DO NOT INTERFERE WITH THE RUNNERS, LIGHT FIXTURES, ETC. AND REMAIN STRAIGHT AND UNOBSTRUCTED.

2 CEILING - TYP SUSPENDED CEILING FRAMING - WOOD GRILLE
3" = 1'-0"

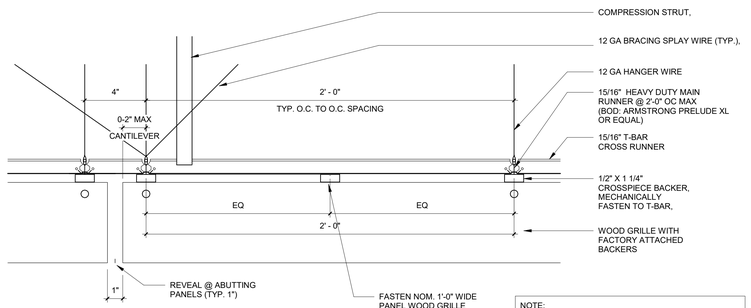

NOTE:
1. UNIT WEIGHT OF WOOD CEILING SYSTEM TO BE LESS THAN 4 LBS PER SQ. FT
2. FOR PERIMETER CONDITION _ _ _ _ _
3. FOR WOOD CEILING BRACING _ _ _ _ _ _
4. SEE SHEET A9XX FOR TYP WIRE TURNS AND CEILING WIRE SPLICES. SEE A9XX FOR TYPICAL WIRE ATTACHMENTS TO STRUCTURE

9 CEILING - SUSPENSION DETAIL - WOOD GRILLE
3" = 1'-0"

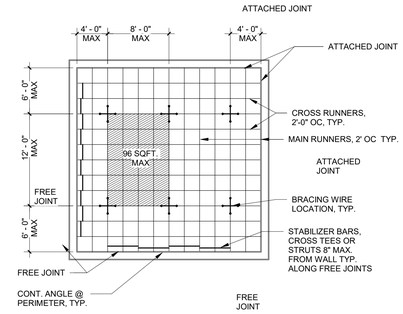

NOTE:
1. BRACING WIRES AND COMP. STRUT SHALL OCCUR AT EVERY 96 SQ.FT. MAX. IN ROOMS OVER 144 SQ.FT.
2. WHERE PERIMETER SEISMIC CLIPS ARE USED, STABILIZER BARS ARE NOTE REQUIRED. FOR DETAILS, SEE

1 CEILING - 8X12 BRACE ASSEMBLY - WOOD GRILLE CEILING
3" = 1'-0"

els architecture+ urban design
2040 Addison St, Berkeley, CA 94704
510.549.2929 | elsarch.com

PROJECT:

PIEDMONT COMMUNITY POOL

777 MAGNOLIA AVENUE PIEDMONT, CA 94611

CLIENT:

CITY OF PIEDMONT

120 VISTA AVENUE PIEDMONT, CA 94611

PROJECT TEAM:

ARCHITECT:
ELS ARCHITECTURE AND URBAN DESIGN
2040 Addison Street
Berkeley, CA 94704
P: 510.549.2929

CIVIL ENGINEER:
BKF ENGINEERS
4670 Willow Road, Suite 250
Pleasanton, CA 94588
P: (925) 396-7704

LANDSCAPE ARCHITECT:
SWA
2200 Bridgeway
Sausalito, CA 94965
P: 415.332.5100

STRUCTURAL ENGINEER:
FORELL/ELSESSER ENGINEERS, INC.
160 Pine Street, 6th Floor
San Francisco, CA 94111
P: 415.837.0700

MEP / FIRE PROTECTION:
GUTTMANN & BLAEVOET
1620 Montgomery Street, Suite 230
San Francisco, CA 94111
P: 415.655.4000

AQUATICS:
AQUATICS DESIGN GROUP
2226 Faraday Avenue
Carlsbad, CA 92008
P: 760.438.8400

SPECIFICATIONS
TOPFLIGHT SPECS
49 Geary Street, Suite 230
San Francisco, CA 94108-5748
P: 415.546.6033

REVISION

NUMBER	DATE	DESCRIPTION

ISSUE:
100% DESIGN DEVELOPMENT

DATE:
APRIL 30, 2022

STAMP:

NOT FOR CONSTRUCTION

SHEET TITLE:

CEILINGS - WOOD GRILLE

SHEET NUMBER:

A911

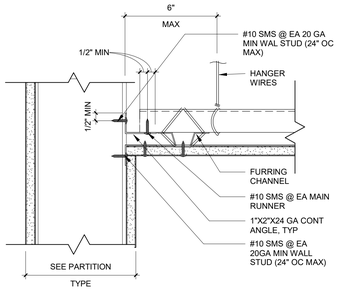

ATTACHED JOINT

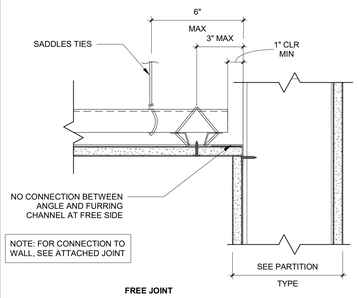

FREE JOINT

NOTE:
1. WHEN GYPSUM BOARD IS TO BE APPLIED TO BOTH CEILING AND WALLS, GYPSUM BOARD SHALL BE APPLIED FIRST TO THE CEILING AND THEN TO WALLS IN ACCORDANCE WITH ASTM C840
2. PROVIDE BACKING TYPE A AT WALL FOR CONT ANGLE, TYP.

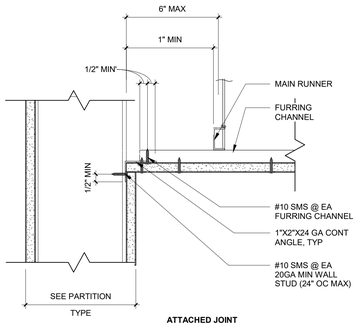

ATTACHED JOINT

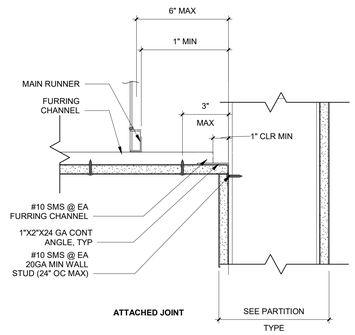

ATTACHED JOINT

7 CEILING PERIMETER - SUSPENDED GYP BD CEILING
3" = 1'-0"

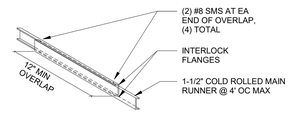

MAIN RUNNER SPLICE

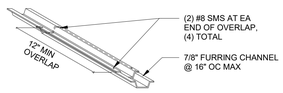

FURRING CHANNEL SPLICE

6 TYP FURRING CHANNEL - SPLICE DETAILS - SUSPENDED GYP BD
1 1/2" = 1'-0"

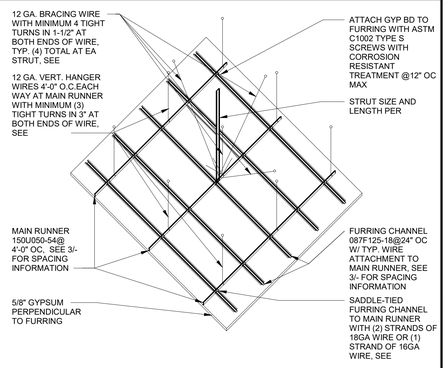

NOTE: SEE SUSPENDED CEILING GENERAL NOTES, SEE 3/- FOR LAYOUT INFORMATION

2 TYP SUSPENDED GYP BD FRAMING
1" = 1'-0"

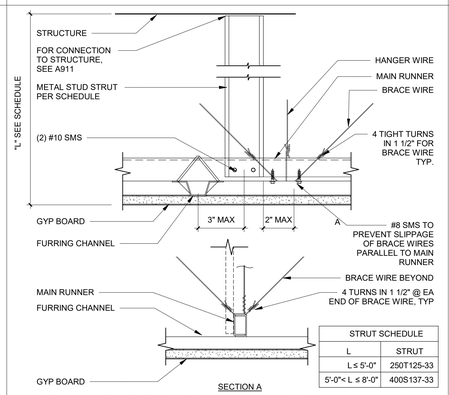

SECTION A

STRUT SCHEDULE	
L	STRUT
L ≤ 5'-0"	250T125-33
5'-0"< L ≤ 8'-0"	400S137-33

9 SUSPENDED GYP BD CEILING - STRUT & BRACE WIRE ASSEMBLY
3" = 1'-0"

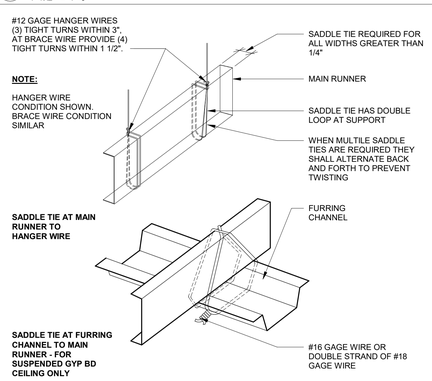

5 TYP SADDLE TIE DETIL - SUSPENDED GYP BD
3" = 1'-0"

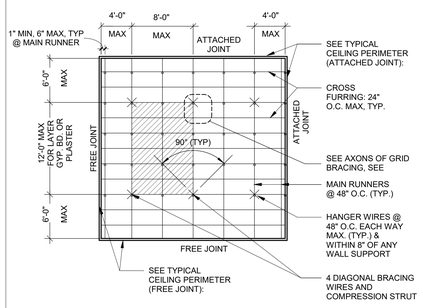

TYPICAL ROOM CEILING PLAN

1 SUSPENDED GYP BD CEILING - BRACE ASSEMBLY
3" = 1'-0"

els architecture+ urban design
2040 Addison St, Berkeley, CA 94704
510.549.2929 | elsarch.com

PROJECT:

PIEDMONT COMMUNITY POOL

777 MAGNOLIA AVENUE PIEDMONT, CA 94611

CLIENT:

CITY OF PIEDMONT

120 VISTA AVENUE PIEDMONT, CA 94611

PROJECT TEAM:

ARCHITECT:
ELS ARCHITECTURE AND URBAN DESIGN
2040 Addison Street
Berkeley, CA 94704
P: 510.549.2929

CIVIL ENGINEER:
BKF ENGINEERS
4670 Willow Road, Suite 250
Pleasanton, CA 94588
P: (925) 396-7704

LANDSCAPE ARCHITECT:
SWA
2200 Bridgeway
Sausalito, CA 94965
P: 415.332.5100

STRUCTURAL ENGINEER:
FORELL/ELSESSER ENGINEERS, INC.
160 Pine Street, 6th Floor
San Francisco, CA 94111
P: 415.837.0700

MEP / FIRE PROTECTION:
GUTTMANN & BLAEVOET
1620 Montgomery Street, Suite 230
San Francisco, CA 94111
P: 415.655.4000

AQUATICS:
AQUATICS DESIGN GROUP
2226 Faraday Avenue
Carlsbad, CA 92008
P: 760.438.8400

SPECIFICATIONS
TOPFLIGHT SPECS
49 Geary Street, Suite 230
San Francisco, CA 94108-5748
P: 415.546.6033

REVISION

NUMBER	DATE	DESCRIPTION

ISSUE:
100% DESIGN DEVELOPMENT

DATE:
APRIL 30, 2022

STAMP:

NOT FOR CONSTRUCTION

SHEET TITLE:

CEILING - SUSPENDED GYP BOARD

SHEET NUMBER:

A912

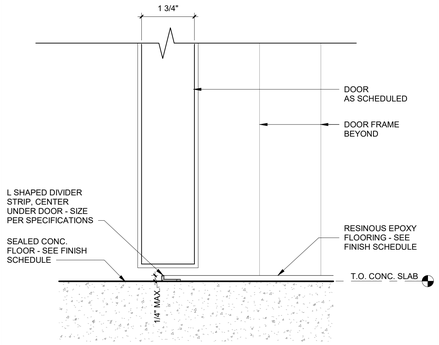

8 THRESHOLD - RESINOUS FLOORING TO SEALED CONCRETE
6" = 1'-0"

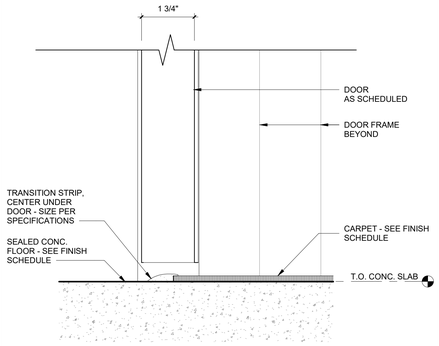

7 THRESHOLD @ CARPET TO SEALED CONCRETE
6" = 1'-0"

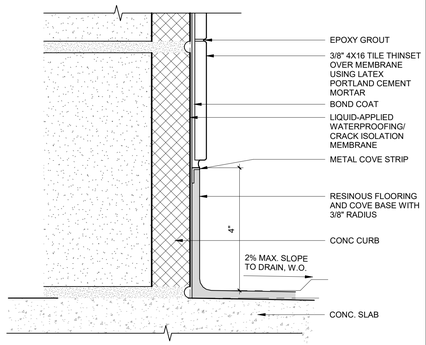

6 EPOXY BASE AT TILE - CMU
6" = 1'-0"

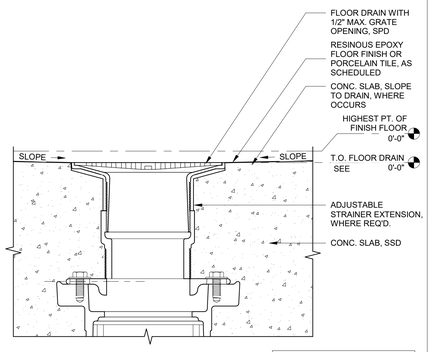

NOTE: 2% MAX. SLOPE TO DRAIN AT PUBLIC AREAS

9 FLOOR DRAIN
6" = 1'-0"

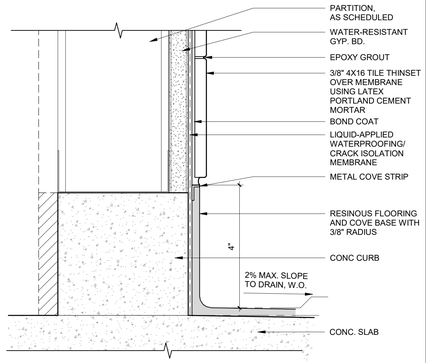

5 EPOXY BASE AT TILE
6" = 1'-0"

els architecture+ urban design
2040 Addison St, Berkeley, CA 94704
510.549.2929 | elsarch.com

PROJECT:

PIEDMONT COMMUNITY POOL
777 MAGNOLIA AVENUE
PIEDMONT, CA 94611

CLIENT:

CITY OF PIEDMONT
120 VISTA AVENUE PIEDMONT, CA 94611

PROJECT TEAM:

ARCHITECT:
ELS ARCHITECTURE AND URBAN DESIGN
2040 Addison Street
Berkeley, CA 94704
P: 510.549.2929

CIVIL ENGINEER:
BKF ENGINEERS
4670 Willow Road, Suite 250
Pleasanton, CA 94588
P: (925) 396-7704

LANDSCAPE ARCHITECT:
SWA
2200 Bridgeway
Sausalito, CA 94965
P: 415.332.5100

STRUCTURAL ENGINEER:
FORELL/ELSESSER ENGINEERS, INC.
160 Pine Street, 6th Floor
San Francisco, CA 94111
P: 415.837.0700

MEP / FIRE PROTECTION:
GUTTMANN & BLAEVOET
1620 Montgomery Street, Suite 230
San Francisco, CA 94111
P: 415.655.4000

AQUATICS:
AQUATICS DESIGN GROUP
2226 Faraday Avenue
Carlsbad, CA 92008
P: 760.438.8400

SPECIFICATIONS
TOPFLIGHT SPECS
49 Geary Street, Suite 230
San Francisco, CA 94108-5748
P: 415.546.6033

REVISION

NUMBER	DATE	DESCRIPTION

ISSUE:
100% DESIGN DEVELOPMENT

DATE:
APRIL 30, 2022

STAMP:

NOT FOR CONSTRUCTION

SHEET TITLE:

INTERIOR DETAILS - BASE AND FLOOR

SHEET NUMBER:

A920

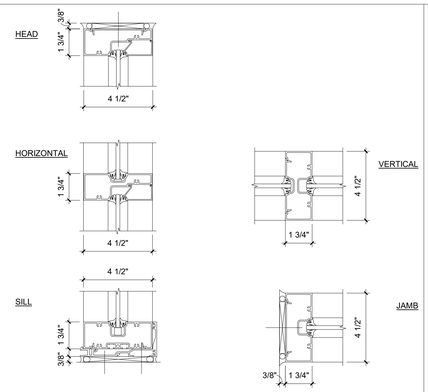

3 TYPICAL INTERIOR STOREFRONT MULLIONS - 1 3/4" X 4 1/2"
3" = 1'-0"

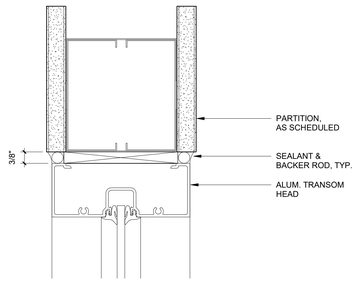

6 TYP. INTERIOR ALUM. STOREFRONT HEAD
6" = 1'-0"

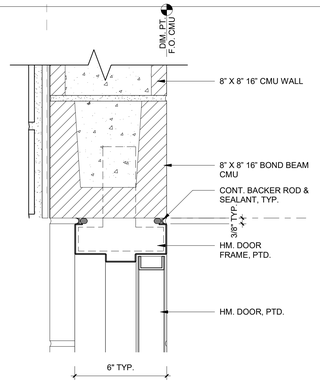

2 HOLLOW METAL FRAME @ CMU WALL INTERIOR
3" = 1'-0"

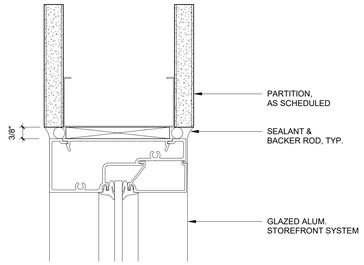

4 TYP. INT. STOREFRONT HEAD/JAMB
6" = 1'-0"

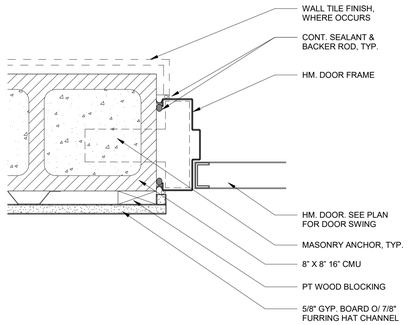

7 HOLLOW METAL DOOR JAMB @ CMU WALL
3" = 1'-0"

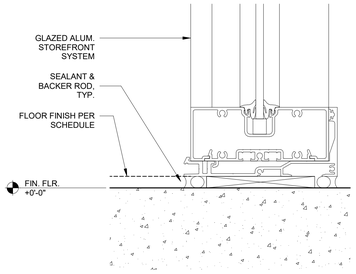

5 TYP. INT. STOREFRONT SILL
6" = 1'-0"

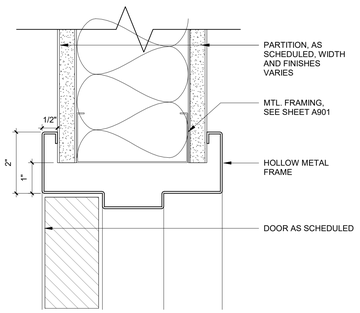

1 HOLLOW METAL FRAME HEAD/JAMB AT GYP BD
6" = 1'-0"

els architecture+ urban design
2040 Addison St, Berkeley, CA 94704
510.549.2929 | elsarch.com

PROJECT:

PIEDMONT COMMUNITY POOL
777 MAGNOLIA AVENUE
PIEDMONT, CA 94611

CLIENT:

CITY OF PIEDMONT
120 VISTA AVENUE PIEDMONT, CA 94611

PROJECT TEAM:

ARCHITECT:
ELS ARCHITECTURE AND URBAN DESIGN
2040 Addison Street
Berkeley, CA 94704
P: 510.549.2929

CIVIL ENGINEER:
BKF ENGINEERS
4670 Willow Road, Suite 250
Pleasanton, CA 94588
P: (925) 396-7704

LANDSCAPE ARCHITECT:
SWA
2200 Bridgeway
Sausalito, CA 94965
P: 415.332.5100

STRUCTURAL ENGINEER:
FORELL/ELSESSER ENGINEERS, INC.
160 Pine Street, 6th Floor
San Francisco, CA 94111
P: 415.837.0700

MEP / FIRE PROTECTION:
GUTTMANN & BLAEVOET
1620 Montgomery Street, Suite 230
San Francisco, CA 94111
P: 415.655.4000

AQUATICS:
AQUATICS DESIGN GROUP
2226 Faraday Avenue
Carlsbad, CA 92008
P: 760.438.8400

SPECIFICATIONS
TOPFLIGHT SPECS
49 Geary Street, Suite 230
San Francisco, CA 94108-5748
P: 415.546.6033

REVISION

NUMBER	DATE	DESCRIPTION

ISSUE:
100% DESIGN DEVELOPMENT

DATE:
APRIL 30, 2022

STAMP:

NOT FOR CONSTRUCTION

SHEET TITLE:

INTERIOR DETAILS - DOOR

SHEET NUMBER:

A921

GENERAL

1. REFER TO SPECIFICATIONS FOR COMPLETE REQUIREMENTS. MORE STRINGENT REQUIREMENT CONTROLS WHERE INFORMATION SHOWN ON DRAWINGS AND IN SPECIFICATIONS ARE IN CONFLICT.
2. CONSTRUCTION SHALL BE IN ACCORDANCE WITH THE [(1) CALIFORNIA BUILDING CODE, 2016 EDITION [WITH DSA/OSHPD AMENDMENTS]; (2) CITY OF _____ BUILDING CODE].
3. DETAILS OF THE CONSTRUCTION NOT FULLY SHOWN OR NOTED ON THE DRAWINGS NOR CALLED FOR IN THE SPECIFICATIONS SHALL BE OF THE SAME SIZE AND CHARACTER AS FOR SIMILAR CONDITIONS WHICH ARE SHOWN AND NOTED.
4. THE WORD "TYPICAL" SHALL MEAN THAT THE INDICATED INFORMATION SHALL BE APPLIED TO ALL SIMILAR CONDITIONS WHETHER OR NOT THE INFORMATION IS SPECIFICALLY REFERENCED, UNLESS NOTED OTHERWISE ON THE DRAWINGS
5. THE CONTRACTOR SHALL VERIFY ALL EXISTING CONDITIONS AND DIMENSIONS AT JOB SITE. THE CONTRACTOR SHALL COMPARE STRUCTURAL DRAWINGS WITH ARCHITECTURAL, CIVIL, LANDSCAPE, MECHANICAL, PLUMBING, AND ELECTRICAL DRAWINGS BEFORE COMMENCING WITH THE WORK AND SHALL NOTIFY THE ARCHITECT OF ANY DISCREPANCIES REQUIRING CLARIFICATION OR REVISION. DO NOT SCALE DRAWINGS.
6. THE CONTRACTOR SHALL BE SOLELY RESPONSIBLE FOR THE SAFETY AND PRESERVATION OF THE BUILDING AND CONTENTS DURING CONSTRUCTION, AND SHALL BE SOLELY RESPONSIBLE FOR PROVIDING A SAFE PLACE TO WORK. THE CONTRACTOR SHALL EXECUTE WORK TO ENSURE SAFETY OF PERSONS AND PROPERTY AGAINST DAMAGE BY FALLING DEBRIS AND OTHER HAZARDS IN CONNECTION WITH THIS WORK. THE STRUCTURE IS STABLE ONLY IN ITS COMPLETED FORM. TEMPORARY SUPPORTS REQUIRED FOR STABILITY DURING ALL INTERMEDIATE STAGES OF CONSTRUCTION SHALL BE DESIGNED, FURNISHED, AND INSTALLED BY THE CONTRACTOR. THE CONTRACTOR IS RESPONSIBLE FOR CONSTRUCTION ANALYSIS AND ERECTION PROCEDURES, INCLUDING DESIGN AND ERECTION OF FALSEWORK, TEMPORARY BRACING, TEMPORARY SHORING ETC. ALL DESIGN SHALL BE BY A STRUCTURAL ENGINEER REGISTERED IN THE STATE OF CALIFORNIA AND HIRED AND PAID BY THE CONTRACTOR.

DESIGN BASIS

THE DESIGN IS IN ACCORDANCE WITH THE CALIFORNIA BUILDING CODE AND PROVIDES FOR THE FOLLOWING LOADS:

LIVE LOADS

ROOFS	20 PSF	
FLOORS		
COMPUTER AREAS	100PSF	
CORRIDORS, STAIRS	100PSF	
HIGH-DENSITY SHELVING AREAS	300PSF	
LIBRARY STACK ROOMS	125PSF	
LOADING DOCKS	100PSF	
MECHANICAL	100PSF	[CONFIRM FOR EVERY PROJECT]
OFFICE	80 PSF	[CONFIRM FOR EVERY PROJECT]
PLAZA	100PSF	
RESIDENTIAL	40 PSF	
RESIDENTIAL BALCONIES	60 PSF	
SUSPENDED SIDEWALK	250PSF	

SNOW LOADS

GROUND SNOW LOAD (Pg) _ __ PSF

WIND LOADS

BASIC WIND SPEED = __mph
EXPOSURE CATEGORY = __
qh = __ psf
h = __ ft
GCpi = ± ___

SEISMIC LOADS

V (NORTH-SOUTH) = __W
V (EAST-WEST) = __W
C_s (NORTH-SOUTH) = __g
C_s (EAST-WEST) = __g
SEISMIC DESIGN CATEGORY =
RISK CATEGORY = __
I = __
I_p = __ (USE Ip = 1.5 FOR COMPONENTS REQUIRED FOR LIFE SAFETY OR CONTAINING HAZARDOUS MATERIALS)

S_s = __g
S_1 = __g
SITE CLASS = C
S_{ds} = __g
S_{d1} = __g

SEISMIC FORCE RESISTING SYSTEMS

NORTH -SOUTH DIRECTION:
STEEL ORDINARY MOMENT-RESISTING FRAME (OMRF) R =___ Ωo = Cd =___

EAST-WEST DIRECTION:
STEEL ORDINARY MOMENT-RESISTING FRAME (OMRF) R = ___ Ωo = Cd =___

THE SEISMIC FORCE RESISTING SYSTEMS CONSIST OF THE STEEL MOMENT FRAME BEAMS AND COLUMNS, COLLECTORS, METAL DECK ROOFS AND FLOORS AND OTHER DRAWING SHEETS AND DETAILS NOTED AS SFRS. COLLECTORS ARE THOSE BEAMS NOTED ON THE PLANS TO HAVE COLLECTOR CONNECTIONS AT ONE OR BOTH ENDS.

BUILDING DRIFT

MAXIMUM INELASTIC SEISMIC STORY DRIFT = _____ x STORY HEIGHT.

TYPICAL PLAN NOTES

1. REFER TO GENERAL NOTES AND SPECIFICATIONS FOR COMPLETE REQUIREMENTS.
2. REFER TO S**XXX** AND S**XXX** FOR GENERAL NOTES, ABBREVIATIONS, AND SYMBOL LEGEND.
3. REFER TO TYPICAL DETAIL SHEETS FOR DETAILS NOT SPECIFICALLY REFERENCED.
   a. CONCRETE: S50**X** - S50**X**
   b. STEEL: S70**X**-S70**X**
   c. METAL DECK: S70**X** - S70**X**
   d. CMU: S**XXX** - S**XXX**
   e. WOOD: S**XXX**-S**XXX**
4. FOR STEEL COLUMN AND BASE PLATE SCHEDULE, SEE S**XXX**.
5. FOR CONCRETE COLUMN SCHEDULE, SEE S**XXX**.
6. FOR CONCRETE BEAM AND SLAB SCHEDULE AND LEGEND, SEE S**XXX**.
7. FOR CONCRETE SHEARWALL SCHEDULE AND LEGEND SEE S**XXX**.
8. FOR WOOD SHEARWALL SCHEDULE AND LEGEND SEE S**XXX**.
9. REFER TO NOTES TITLED "DOCUMENT COORDINATION" FOR REFERENCE TO INFORMATION FOUND ON OTHER DRAWINGS.
10. BEAMS, COLUMNS, BRACES, & WALLS ARE CENTERED ON GRID LINES, U.O.N. INFILL BEAMS ARE EQUALLY SPACED BETWEEN GRIDS OR SPECIFICALLY LOCATED MEMBERS, U.O.N
11. ALL CLADDING SYSTEMS AND INTERIOR PARTITIONS SHALL HAVE THE ABILITY TO COMPENSATE FOR VERTICAL DEFLECTIONS OF **X/X"** MIN., U.O.N.
12. BEAM PENETRATIONS NOT SHOWN IN THE STRUCTURAL DRAWINGS ARE NOT PERMITTED WITHOUT APPROVAL OF THE ENGINEER.
13. STEEL-FRAMED FLOOR NOTES:
    a. THE DIMENSION BETWEEN EDGE OF SLAB OPENING AND CENTERLINE OF CLOSEST STEEL FRAMING BEAM SHALL BE 8" FOR BEAMS NOT OTHERWISE SPECIFICALLY LOCATED **[ARCHITECT TO VERIFY THIS DIMENSION]**.
    b. ALL STEEL BEAMS SUPPORTING CONCRETE FILL OVER METAL DECK SHALL HAVE WELDED STUDS. MINIMUM SIZE AND SPACING SHALL BE ¾" DIA. @ 12" O.C., U.O.N. TOP OF WELDED STUDS SHALL BE ¼" BELOW TOP OF CONCRETE, TYPICAL.

DOCUMENT COORDINATION

1. REFER TO ARCHITECTURAL DRAWINGS FOR SLAB EDGE DIMENSIONS.
2. ONLY LARGE FLOOR AND WALL OPENINGS ARE SHOWN ON STRUCTURAL DRAWINGS. REFER TO ARCHITECTURAL AND OTHER DRAWINGS FOR COMPLETE SCOPE OF OPENINGS AND FOR LOCATIONS AND DIMENSIONS OF ALL OPENINGS. REFER TO TYPICAL DETAILS FOR FRAMING AND/OR REINFORCEMENT REQUIREMENTS AROUND OPENINGS.
3. REFER TO ARCHITECTURAL DRAWINGS FOR ELEVATIONS NOT SHOWN AND LOCATION AND SIZE OF SLOPES, STEPS, DEPRESSIONS, BLOCKOUTS, RECESSES, CURBS, PADS, ETC.
4. REFER TO ARCHITECTURAL AND OTHER DRAWINGS FOR SIZES AND LOCATIONS OF EQUIPMENT SUPPORT PADS AND CURBS AND FOR EQUIPMENT ANCHORAGE/BRACING.
5. REFER TO ARCHITECTURAL AND OTHER DRAWINGS FOR SIZES, LOCATIONS, AND ELEVATIONS OF ITEMS CAST IN PLACE OR EMBEDDED IN CONCRETE AND COORDINATE WITH STRUCTURAL ELEMENTS. THESE ITEMS INCLUDE, BUT ARE NOT LIMITED TO:
   a. ANCHOR BOLTS, INSERTS, AND HANGERS FOR ATTACHMENT OF NON-STRUCTURAL BUILDING COMPONENTS.
   b. SLEEVES, DRAINS, BOXES, AND CONDUITS.
6. ITEMS WHICH ARE NOT SHOWN ON THE STRUCTURAL DRAWINGS WHICH ATTACH TO, EMBED, PENETRATE, OR OTHERWISE AFFECT THE BUILDING STRUCTURE ARE SUBJECT TO THE LIMITATIONS OUTLINED IN THE DRAWINGS AND INCLUDE THE FOLLOWING ITEMS:
   a. PLUMBING UNDER OR ADJACENT TO FOUNDATIONS: S5**XX**
   b. PENETRATIONS THROUGH FOOTINGS AND GRADE BEAMS: S5**XX**
   c. CONDUITS EMBEDDED IN STRUCTURAL CONCRETE: S5**XX**
   d. PENETRATIONS IN CONCRETE BEAMS: S5**XX**
   e. OPENINGS & PENETRATIONS IN CONCRETE WALLS AND SLABS: S5**XX**
   f. PENETRATIONS IN WEBS OF STEEL BEAMS: S7**XX**
   g. OPENINGS & PENETRATIONS IN CONCRETE FILL OVER STEEL DECK: S7**XX**
   h. CONDUITS EMBEDDED IN CONCRETE FILL OVER STEEL DECK: S7**XX**
   i. SUSPENDED LOADS FROM STEEL DECK: S7**XX**
7. REFER TO ARCHITECTURAL DRAWINGS FOR LOCATIONS AND EXTENT OF CMU PARTITION WALLS. SEE TYPICAL CMU DETAILS FOR CONSTRUCTION AND BRACING.
8. REFER TO ARCHITECTURAL DRAWINGS FOR LOCATION AND DETAILS OF NON-BEARING INTERIOR AND EXTERIOR WALL CONSTRUCTION.
9. REFER TO ARCHITECTURAL AND OTHER DRAWINGS FOR SUPPLEMENTARY STRUCTURAL SUPPORTS AND EMBEDDED ATTACHMENTS FOR NON-STRUCTURAL SYSTEMS AND COMPONENTS NOT SPECIFICALLY DETAILED ON THE STRUCTURAL DRAWINGS, INCLUDING:
   a. CLADDING
   b. PARAPETS
   c. CEILINGS
   d. CANOPIES & TRELLISES
   e. SUNSHADES & SUN CONTROL DEVICES
   f. ROOF SCREENS
   g. STAIRS
   h. RAILINGS
   i. ELEVATORS AND MACHINE ROOMS
   j. LIGHT-GAGE METAL FRAMING
   k. WINDOW WASHING
   l. SUPPORT FRAMING AT ROLL-DOWN DOORS
   m. CANTILEVER FRAMING FOR PARTIAL-HEIGHT WALLS
   n. MISCELLANEOUS ARCHITECTURAL APPENDAGES
   o. SIGNS, FLAG POLES, AND BANNERS
10. REFER TO ARCHITECTURAL DRAWINGS FOR:
    a. REQUIRED WATERPROOFING AND DRAINAGE SCOPE AND DETAILS. REFERENCE TO WATERPROOFING AND DRAINAGE IN THE STRUCTURAL DRAWINGS IS ONLY FOR THE CONVENIENCE OF THE CONTRACTOR.
    b. REQUIRED EXTENT OF FIREPROOFING AND FIREPROOFING DETAILS FOR STRUCTURAL ELEMENTS.
    c. SCOPE OF CONCRETE SURFACES TO BE TREATED AS "ARCHITECTURAL CONCRETE".
    d. SCOPE OF STRUCTURAL STEEL TO BE TREATED AS "ARCHITECTURALLY EXPOSED STRUCTURAL STEEL (AESS)".
    e. DETAILED SCOPE OF FINISHES FOR STRUCTURAL STEEL INCLUDING GALVANIZING, PAINTING, AND OTHER COATINGS.

SPECIAL INSPECTION

THE SPECIAL INSPECTION REQUIREMENTS OF CHAPTER 17 OF THE CALIFORNIA BUILDING CODE [AND THE CITY OF _____ BUILDING CODE] APPLY TO THE FOLLOWING:

- STEEL CONSTRUCTION
- CONCRETE CONSTRUCTION
- ANCHORS AND DOWELS IN CEMENTITIOUS GROUT
- ANCHORS AND DOWELS IN RESIN
- EXPANSION ANCHORS
- UNDERCUT ANCHORS
- MASONRY CONSTRUCTION
- WOOD CONSTRUCTION
- SOILS
- PILE FOUNDATIONS
- PIER FOUNDATIONS

THE SUPPLEMENTAL SPECIAL INSPECTION REQUIREMENTS FOR SEISMIC RESISTANCE OF CBC SECTION 1705.12 **[1705A.12]** APPLY TO THE FOLLOWING ELEMENTS OF THE SEISMIC LOAD RESISTING SYSTEM AND ARCHITECTURAL COMPONENTS:

- STRUCTURAL STEEL
- STRUCTURAL WOOD
- COLD-FORMED STEEL FRAMING
- PIER FOUNDATIONS
- ARCHITECTURAL COMPONENTS:
  EXTERIOR NON-BEARING COLD-FORMED STEEL WALLS

THE SUPPLEMENTAL STRUCTURAL TESTING REQUIREMENTS FOR SEISMIC RESISTANCE OF CBC SECTION 1705.13 **[1705A.13]** APPLY TO THE FOLLOWING ELEMENTS OF THE SEISMIC LOAD RESISTING SYSTEM:

- STRUCTURAL STEEL
- SEISMICALLY ISOLATED STRUCTURES

STRUCTURAL OBSERVATION

1. STRUCTURAL OBSERVATION FOR SEISMIC RESISTANCE SHALL BE PROVIDED IN ACCORDANCE WITH CBC SECTION 1704
2. THE CONTRACTOR SHALL NOTIFY THE ENGINEER AT LEAST 3 DAYS PRIOR TO COMPLETION OF ANY OF THE FOLLOWING CONSTRUCTION MILESTONES TO ALLOW TIMELY STRUCTURAL OBSERVATION TO OCCUR. THE SPECIFIC MILESTONES AND FREQUENCY OF STRUCTURAL OBSERVATION IS AT THE DISCRETION OF THE ENGINEER:
   a. FOUNDATION REINFORCEMENT AND EMBEDDED ANCHOR BOLTS.
   b. STRUCTURAL STEEL ERECTION.
   c. METAL DECK WELDING.
   d. MAJOR COLUMN/BEAM/SLAB CONCRETE REINFORCEMENT.
   e. SHEARWALL CONCRETE REINFORCEMENT.
   f. ROUGH FRAMING.
   g. SHEARWALLS, HOLD-DOWNS, AND STRAPS.
   h. CMU BLOCK AND REINFORCEMENT.
3. AT THE CONCLUSION OF THE STRUCTURAL WORK, THE OBSERVER WILL SUBMIT A WRITTEN STATEMENT TO THE BUILDING OFFICIAL THAT THE SITE VISITS HAVE BEEN MADE AND IDENTIFY ANY REPORTED DEFICIENCIES THAT, TO THE BEST OF THE STRUCTURAL OBSERVER'S KNOWLEDGE, HAVE NOT BEEN RESOLVED.

SUBMITTALS

1. REFER TO SPECIFICATIONS FOR COMPLETE REQUIREMENTS.
2. THE CONTRACTOR SHALL SUBMIT A SUBMITTAL SCHEDULE FOR REVIEW FOUR WEEKS BEFORE THE FIRST SUBMITTAL IS ISSUED.
3. THE CONTRACTOR SHALL REVIEW EACH SUBMITTAL PRIOR TO FORWARDING TO THE ARCHITECT AND STRUCTURAL ENGINEER. THE CONTRACTOR IS TO STAMP EACH SUBMITTAL VERIFYING THAT THE FOLLOWING IS ADDRESSED:
   a. THE SUBMITTAL IS REQUESTED BY THE CONTRACT DOCUMENTS
   b. THE SUBMITTAL IS BASED ON THE MOST CURRENT EDITION OF THE CONTRACT DOCUMENTS INCLUDING ALL ADDENDA, SUPPLEMENTS, BULLETINS, RFI'S, ETC.
   c. THE ARCHITECT'S AND STRUCTURAL ENGINEER'S COMMENTS FROM ANY PREVIOUS SUBMITTALS ARE ADDRESSED.
   d. THE WORK IS COORDINATED AMONG ALL CONSTRUCTION TRADES.
   e. REVISIONS FROM PREVIOUS SUBMITTALS ARE CLEARLY MARKED BY CIRCLING OR CLOUDS.
   f. SUBMITTAL IS COMPLETE.
   g. SUBMITTAL DOES NOT INCLUDE A SUBSTITUTION REQUEST.
   h. SUBMITTAL SHALL INCLUDE A STAMP INDICATING PROJECT NAME AND LOCATION, SUBMITTAL NUMBER, SPECIFICATION SECTION NUMBER.
4. THE STRUCTURAL ENGINEER WILL RETURN, WITHOUT COMMENT, SUBMITTALS WHICH THE CONTRACTOR HAS NOT STAMPED OR WHICH DO NOT MEET THE ABOVE REQUIREMENTS. THE STRUCTURAL ENGINEER'S REVIEW OF SUBMITTALS SHALL BE FOR GENERAL CONFORMANCE WITH THE DESIGN INTENT. NO WORK SHALL BE STARTED WITHOUT SUCH REVIEW.
5. THE STRUCTURAL ENGINEER WILL ONLY STAMP SUBMITTALS FOR ITEMS WITHIN THE SCOPE OF WORK THAT APPEARS IN THE STRUCTURAL DRAWINGS AND SPECIFICATIONS. THE STRUCTURAL ENGINEER MAY REVIEW AND PROVIDE COMMENTS ON SUBMITTALS FOR ITEMS THAT APPEAR ON OTHER DRAWINGS OR ARE DELEGATED DESIGN ELEMENTS, BUT WILL NOT STAMP THESE SUBMITTALS.
   a. CONCRETE MIX DESIGNS AND WELDING PROCEDURE SPECIFICATIONS WILL BE REVIEWED BY THE STRUCTURAL ENGINEER, BUT NOT STAMPED, SINCE THE INFORMATION IN THESE SUBMITTALS IS NOT THE RESPONSIBILITY OF THE STRUCTURAL ENGINEER.

DELEGATED DESIGN ELEMENTS

1. DELEGATED DESIGN ELEMENTS ARE THE RESPONSIBILITY OF THE CONTRACTOR. DELEGATED DESIGN ELEMENTS ASSUMED TO BE DESIGNED BY THE CONTRACTOR INCLUDE:
   a. TEMPORARY SHORING AND BRACING
   b. SITE SHORING
   c. CONCRETE FORMWORK AND FALSEWORK
   d. OTHER DESIGN REQUIRED FOR TEMPORARY MEANS AND METHODS OF THE CONTRACTOR
   e. STEEL STAIRS INCLUDING RAILINGS
   f. PRECAST STAIRS
   g. RAILINGS
   h. ANCHORAGE AND BRACING OF ALL MEP EQUIPMENT AND DISTRIBUTION LINES (EXCEPT FOR ITEMS SPECIFICALLY DETAILED ON THE CONTRACT DOCUMENTS)
   i. INTERIOR LIGHT GAUGE FRAMED PARTITIONS
   j. EXTERIOR LIGHT GAUGE FRAMED CLADDING
   k. VENDOR-SUPPLIED CLADDING (EXCEPT FOR SPECIFICALLY DETAILED BACK-UP & SUPPORT STEEL)
   l. CANOPIES (EXCEPT FOR SPECIFICALLY DETAILED CANOPY FRAMING)
   m. SUNSHADES (EXCEPT FOR SPECIFICALLY DETAILED BACK-UP & SUPPORT STEEL)
   n. ROOF SCREENS (EXCEPT FOR SPECIFICALLY DETAILED ROOF SCREEN FRAMING)
   o. SKYLIGHTS (EXCEPT FOR SPECIFICALLY DETAILED SUPPORT STEEL)
   p. ELEVATORS (EXCEPT FOR GUIDERAIL SUPPORT TUBES)
   q. ESCALATORS (EXCEPT FOR SPECIFICALLY DETAILED SUPPORT STEEL)
   r. WINDOW-WASHING DAVITS (EXCEPT FOR SPECIFICALLY DETAILED SUPPORT STEEL)
   s. FALL ARREST SYSTEMS (EXCEPT FOR SPECIFICALLY DETAILED SUPPORT STEEL)
   t. SEISMIC JOINT COVERS
   u. CONCRETE MIX DESIGNS
2. DESIGN OF ALL DELEGATED DESIGN ELEMENTS SHALL BE BY A REGISTERED CALIFORNIA STRUCTURAL OR CIVIL ENGINEER.
3. DELEGATED DESIGN ELEMENT SHOP DRAWING AND CALCULATION SUBMITTALS SHALL BE STAMPED AND SIGNED BY THE CONTRACTOR'S DESIGN ENGINEER.
4. DELEGATED DESIGN ELEMENT CALCULATIONS SHALL HAVE A SUMMARY PAGE STATING THE DESIGN ASSUMPTIONS INCLUDING CODES AND DESIGN LOADS.
5. DELEGATED DESIGN ELEMENT SHOP DRAWINGS SHALL SHOW THE MAGNITUDES, DIRECTIONS, LOCATIONS, AND CONNECTION CONDITIONS OF ALL LOADS IMPOSED ON THE BUILDING STRUCTURE BY THE ELEMENT INCLUDING, BUT NOT LIMITED TO:
   a. STAIRS
   b. RAILINGS
   c. MEP EQUIPMENT
   d. CLADDING
   e. CANOPIES & TRELLISES
   f. SUNSHADES & SUN CONTROL DEVICES
   g. ROOF SCREENS
   h. SKYLIGHTS
   i. ELEVATORS
   j. ESCALATORS
   k. WINDOW-WASHING DAVITS
   l. FALL ARREST SYSTEMS
6. ALL DELEGATED DESIGN ELEMENTS MUST BE SUBMITTED TO THE OWNER AND THE ARCHITECT FOR REVIEW.
7. AFTER OWNER & ARCHITECT REVIEW IS COMPLETE, ALL DELEGATED DESIGN ELEMENTS MUST BE SUBMITTED TO THE PLAN CHECK AUTHORITY FOR REVIEW AND APPROVAL.

EXTERIOR CLADDING

1. THESE NOTES APPLY TO ARCHITECTURAL CURTAIN WALL AND CLADDING, DENOTED HEREIN AS "EXTERIOR WALL".
2. ALL PRIMARY STRUCTURAL STEEL FRAMING SHALL BE CONSIDERED AS HAVING NO (ZERO) TORSIONAL CAPACITY AND NO (ZERO) CAPACITY FOR LATERAL LOADS APPLIED TRANSVERSELY TO UNBRACED FLANGES OF BEAMS. ANY BEAM FLANGE THAT IS NOT SECURED TO THE FLOOR SLAB BY WELDED STUDS SHALL BE CONSIDERED UNBRACED. WHERE CONNECTIONS IMPOSE TORSIONAL LOADS OR LOADS TO UNBRACED FLANGES OF BEAMS, COMPLETE SECONDARY STEEL BRACING OF THE SUPPORTING STRUCTURE SHALL BE DESIGNED AND PROVIDED BY THE TRADE CONTRACTOR.
3. REFER TO PARAGRAPH ABOVE FOR LIMITATIONS ON LOADS AND STRESSES IMPOSED ON THE PRIMARY STRUCTURE AND PROVIDE ALL SECONDARY FRAMING INCLUDING BUT NOT LIMITED TO KICKERS, GIRTS OR POSTS, AND BRACING REQUIRED BY THESE SPECIFICATIONS. LATERAL AND /OR TORSIONAL LOADS MAY BE IMPOSED ON BUILDING FLOOR AND ROOF PERIMETER SPANDREL BEAMS WITHOUT SECONDARY BRACING AT THE FOLLOWING LOCATIONS:
   a. WITHIN SIX INCHES OF EITHER SIDE OF THE CENTERLINE OF BEAMS SUPPORTED BY THE SPANDREL GIRDER, ONLY WHERE SAID BEAMS ARE INDICATED ON THE FRAMING PLANS WITH THE FOLLOWING SYMBOL AT THE BEAM END FRAMING INTO THE PERIMETER SPANDREL:
   b. WITHIN 30 INCHES OF EITHER SIDE OF COLUMN CENTERLINE (THIS IS NOT ALLOWED IN PLASTIC HINGE REGIONS OF STEEL MOMENT RESISTING FRAMES).
4. WHERE LATERAL LOADS ARE APPLIED BY EXTERIOR WALL TO BEAM BOTTOM FLANGES AT ANY LOCATION OTHER THAN THOSE IDENTIFIED ABOVE, EXTERIOR WALL TRADE CONTRACTOR SHALL PROVIDE SECONDARY BRACING OF THE BEAM BOTTOM FLANGE IN ACCORDANCE WITH THE SPECIFICATIONS.
5. PRIMARY STRUCTURAL BEAMS AND COLUMNS ARE DETAILED AND ERECTED USING TOLERANCES IN ACCORDANCE WITH THE LATEST EDITION OF AISC SPECIFICATIONS AND EXTERIOR CLADDING SHALL BE DETAILED TO PERMIT INSTALLATION WITHIN THESE TOLERANCES.

STAIRS

1. THESE NOTES APPLY TO ALL STAIRS NOT DETAILED IN THE STRUCTURAL DRAWINGS. SEE SPECIFICATIONS FOR ADDITIONAL REQUIREMENTS.
2. STAIR DESIGN DOCUMENTS AND CALCULATIONS SHALL BE STAMPED AND SIGNED BY A CIVIL OR STRUCTURAL ENGINEER REGISTERED IN CALIFORNIA. THIS PACKAGE SHALL BE SUBMITTED TO THE ARCHITECT FOR REVIEW.
3. ALL PRIMARY STRUCTURAL STEEL FRAMING SHALL BE CONSIDERED AS HAVING NO (ZERO) TORSIONAL CAPACITY AND NO (ZERO) CAPACITY FOR LATERAL LOADS APPLIED TRANSVERSELY TO UNBRACED FLANGES OF BEAMS. ANY BEAM FLANGE THAT IS NOT SECURED TO THE FLOOR SLAB BY WELDED STUDS SHALL BE CONSIDERED UNBRACED. WHERE CONNECTIONS IMPOSE TORSIONAL LOADS OR LOADS TO UNBRACED FLANGES OF BEAMS, COMPLETE SECONDARY STEEL BRACING OF THE SUPPORTING STRUCTURE SHALL BE DESIGNED AND PROVIDED BY THE TRADE CONTRACTOR.
4. REFER TO PARAGRAPH ABOVE FOR LIMITATIONS ON LOADS AND STRESSES IMPOSED ON THE PRIMARY STRUCTURE AND PROVIDE ALL SECONDARY FRAMING INCLUDING BUT NOT LIMITED TO KICKERS, GIRTS OR POSTS, AND BRACING REQUIRED BY THESE SPECIFICATIONS. LATERAL AND /OR TORSIONAL LOADS MAY BE IMPOSED ON BUILDING FLOOR AND ROOF PERIMETER SPANDREL BEAMS WITHOUT SECONDARY BRACING AT THE FOLLOWING LOCATIONS:
   a. WITHIN SIX INCHES OF EITHER SIDE OF THE CENTERLINE OF BEAMS SUPPORTED BY THE SPANDREL GIRDER, ONLY WHERE SAID BEAMS ARE INDICATED ON THE FRAMING PLANS WITH THE FOLLOWING SYMBOL AT THE BEAM END FRAMING INTO THE PERIMETER SPANDREL:
   b. ON STRUCTURAL BEAM, WITHIN 30 INCHES OF EITHER SIDE OF COLUMN CENTERLINE .
5. WHERE LATERAL LOADS ARE APPLIED BY STAIRS TO BEAM BOTTOM FLANGES AT ANY LOCATION OTHER THAN THOSE IDENTIFIED ABOVE, STAIR TRADE CONTRACTOR SHALL PROVIDE SECONDARY BRACING OF THE BEAM BOTTOM FLANGE IN ACCORDANCE WITH THE SPECIFICATIONS.
6. PRIMARY STRUCTURAL BEAMS AND COLUMNS ARE DETAILED AND ERECTED USING TOLERANCES IN ACCORDANCE WITH THE LATEST EDITION OF AISC SPECIFICATIONS AND STAIRS SHALL BE DETAILED TO PERMIT INSTALLATION WITHIN THESE TOLERANCES.

SHEET LIST

#	TITLE	ISSUE LOG: 04/15/22 - PROGESS SET		
S0.0.1	GENERAL NOTES	✓		
S0.0.2	GENERAL NOTES	✓		
S0.0.3	GENERAL NOTES	✓		
S0.0.4	ABBREVIATIONS, SYMBOLS, & SHEET LIST	✓		
S2.0.0	LEVEL 1 AND FOUNDATION PLAN	✓		
S2.0.1	ROOF LEVEL FRAMING PLAN	✓		
S2.0.2	HIGH ROOF LEVEL FRAMING PLAN	✓		
S4.0.1	SECTIONS	✓		
S5.0.1	TYPICAL CONCRETE DETAILS	✓		
S5.0.2	TYPICAL CONCRETE DETAILS	✓		
S5.0.3	FOUNDATION SCHEDULES & DETAILS	✓		
S5.1.1	CONCRETE DETAILS	✓		
S6.0.1	TYPICAL LOAD BEARING & NON-LOAD BEARING CONCRETE MASONRY UNIT (CMU) DETAILS	✓		
S6.0.2	TYPICAL NON-LOAD BEARING CONCRETE MASONRY UNIT (CMU) DETAILS	✓		
S7.0.1	TYPICAL STEEL DETAILS	✓		
S7.0.2	TYPICAL STEEL DETAILS	✓		
S7.0.3	TYPICAL METAL DECK DETAILS	✓		
S7.0.4	TYPICAL METAL DECK DETAILS	✓		
S7.0.5	STEEL COLUMN SCHEDULE & DETAILS	✓		

els architecture+ urban design
2040 Addison St, Berkeley, CA 94704
510.549.2929 | elsarch.com

PROJECT:

PIEDMONT COMMUNITY POOL

777 MAGNOLIA AVENUE PIEDMONT, CA 94611

PROJECT NUMBER: **21-103**

CLIENT: **Owner**

PROJECT TEAM:

ARCHITECT:
ELS ARCHITECTURE AND URBAN DESIGN
2040 Addison Street
Berkeley, CA 94704
P: 510.549.2929

CIVIL ENGINEER:
BKF ENGINEERS
4670 Willow Road, Suite 250
Pleasanton, CA 94588
P: 925.396.7700

LANDSCAPE ARCHITECT:
SWA
2200 Bridgeway
Sausalito, CA 94965
P: 415.332.5100

STRUCTURAL ENGINEER:
FORELL/ELSESSER
160 Pine Street, Suite 600
San Francisco, CA 94111
P: 415.837.0700

MEP / FIRE / TELECOM / SECURITY:
GUTTMANN & BLAEVOET
2351 Powell Street
San Francisco, CA 94133
P: 415.655.4000

AQUATICS:
AQUATIC DESIGN GROUP
2226 Faraday Avenue
Carlsbad, CA 92008
P: 760.438.8400

SPECIFICATIONS:
TOPFLIGHT SPECS
49 Geary Street, Suite 230
San Francisco, CA 94108-5748
P: 415.546.6033

REVISION

NUMBER	DATE	DESCRIPTION
	4/15/2022	25% Progress Set

ISSUE: **100% DESIGN DEVELOPMENT**

DATE: **APRIL 30, 2022**

STAMP:

NOT FOR CONSTRUCTION

SHEET TITLE: **GENERAL NOTES**

SHEET NUMBER: **S0.0.1**

GEOTECHNICAL INFORMATION

1. THE OWNER'S GEOTECHNICAL ENGINEER, _____, HAS PREPARED AN INVESTIGATION REPORT FOR USE ON THIS PROJECT, TITLED: "_____", DATED _____.
2. THE CONTRACTOR SHALL REVIEW AND UNDERSTAND THE INFORMATION CONTAINED IN THE REPORT, BUT SHALL NOT ASSUME THAT SUCH INFORMATION IS SUFFICIENT FOR THE CONTRACTOR'S PURPOSES.
3. THE CONTRACTOR SHALL BE FAMILIAR WITH THE GEOTECHNICAL CONDITIONS AT THE PROJECT SITE.
4. THE CONTRACTOR SHALL BE RESPONSIBLE TO OBTAIN GEOTECHNICAL STUDIES AND INFORMATION NECESSARY TO COMPLETE THE WORK.
5. THE CONTRACTOR SHALL OBTAIN THE SERVICES OF AN INDEPENDENT GEOTECHNICAL ENGINEER LICENSED IN THE STATE OF CALIFORNIA TO ANALYZE AVAILABLE INFORMATION AND TO MAKE ADDITIONAL INVESTIGATIONS AS NECESSARY TO COMPLETE THE WORK.
6. THE OWNER'S GEOTECHNICAL ENGINEER SHALL INSPECT AND APPROVE THE PREPARED SUBGRADE FOR CONFORMANCE WITH THE REQUIREMENTS OF THE GEOTECHNICAL REPORT PRIOR TO PLACEMENT OF FOUNDATION REINFORCEMENT.

FOUNDATIONS

1. REFER TO GENERAL NOTES SECTION TITLED "GEOTECHNICAL INFORMATION".
2. SLABS ON GRADE AND FOUNDATIONS SHALL BEAR ON APPROVED NATIVE SUBGRADE OR COMPACTED SOIL.
3. FOOTINGS AND GRADE BEAMS SHALL BE CAST IN NEAT TRENCHED EXCAVATIONS (1" MINIMUM WIDER THAN SCHEDULED). IF FOOTINGS CANNOT BE CAST IN TRENCHES, FORM FOOTINGS TO SCHEDULED DIMENSIONS.
4. BOTTOM OF FOOTINGS SHALL BE CALCULATED USING INFORMATION SHOWN ON THE DRAWINGS AND MAY BE REVISED BY THE GEOTECHNICAL ENGINEER TO ENSURE MINIMUM FOOTING EMBEDMENTS OF [_____] FEET INTO FIRM, APPROVED SOIL MATERIAL (UNDISTURBED NATURAL SOILS OR COMPACTED ENGINEERED FILL). TOP OF FOOTING DIMENSION FROM DATUM SHALL BE AS SHOWN ON PLANS.
5. COMPACTED NATURAL SOIL, FILL, AND BACKFILL IS TO BE UNIFORMLY COMPACTED WITH APPROVED COMPACTION EQUIPMENT. FILL MATERIAL AND OPERATIONS SHALL BE INSPECTED BY THE OWNER'S GEOTECHNICAL ENGINEER.
6. WATER SHALL NOT BE ALLOWED TO STAND IN TRENCHES OR FORMS BEFORE OR AFTER CONCRETE IS PLACED, AND SHALL BE PUMPED OUT. IF BOTTOMS OF TRENCHES BECOME SOFTENED DUE TO RAIN OR OTHER WATER BEFORE FOOTINGS ARE CAST, THE CONTRACTOR SHALL EXCAVATE THE SOFTENED MATERIAL AND REPLACE WITH CONCRETE.
7. ALLOWABLE BEARING PRESSURES FOR SPREAD FOOTINGS:

DEAD LOAD	_____ PSF
DEAD PLUS LIVE LOAD	_____ PSF
TOTAL LOAD (INCLUDING SEISMIC)	_____ PSF

8. CANTILEVER RETAINING WALL DESIGN PRESSURE: _____ PCF
9. BASEMENT WALLS (RESTRAINED AT THE TOP) DESIGN PRESSURE: _____ PCF
10. SEISMIC INCREMENT FOR RETAINING WALL DESIGN PRESUURE: _____PCF
11. DO NOT BACKFILL BASEMENT WALLS UNTIL LEVEL [_____] CONSTRUCTION IS COMPLETE AND CONCRETE SLAB AND FILL ON METAL DECK OF SUPPORTING LEVELS HAS ATTAINED ITS 28-DAY STRENGTH.
12. SPECIAL INSPECTION REQUIREMENTS APPLY TO FILL AND BACKFILL OPERATIONS. FOOTING EXCAVATIONS SHALL BE INSPECTED AND APPROVED BY THE GEOTECHNICAL ENGINEER PRIOR TO PLACING REINFORCEMENT STEEL.

CONCRETE

1. ALL CONCRETE SHALL DEVELOP THE FOLLOWING COMPRESSIVE STRENGTHS AT 28 DAYS (AND 56 DAYS WHERE APPLICABLE):

NORMAL WEIGHT CONCRETE	28 DAYS	56DAYS
FOOTINGS, GRADE BEAMS	__PSI	__PSI
WALLS, PILASTERS	__PSI	__PSI
COLUMNS	__PSI	__PSI
BEAMS, JOISTS, SUSPENDED SLABS	__PSI	__PSI
SLABS-ON-GRADE, CURBS	__PSI	__PSI
FILL ON METAL DECK	__PSI	__PSI
PNEUMATICALLY PLACED CONCRETE	__PSI	__PSI
LIGHTWEIGHT CONCRETE		
FILL ON METAL DECK	__PSI	

2. REFER TO SPECIFICATIONS FOR CONCRETE CLASS DESIGNATIONS.
3. ALL EXPOSED CORNERS OR EDGES OF COLUMNS, PIERS, WALLS, BEAMS, ETC., SHALL BE FORMED WITH A 3/4" CHAMFER UNLESS OTHERWISE NOTED ON DRAWINGS.
4. CONSTRUCTION JOINTS SHALL BE LOCATED WHERE SHOWN AND, IF NOT SHOWN, WHERE DIRECTED BY THE ARCHITECT. THEY SHALL BE LOCATED SO AS TO LEAST IMPAIR THE STRENGTH OF THE STRUCTURE AND TO MINIMIZE SHRINKAGE. PROVIDE DOWELS AND KEYS AS DETAILED AND DIRECTED, AND THOROUGHLY CLEAN AND REMOVE LAITANCE FROM SURFACES BEFORE PROCEEDING WITH THE NEXT PLACEMENT.
5. CONTRACTOR SHALL SUBMIT CONSTRUCTION JOINT LAYOUT FOR REVIEW.
6. FOR DRIP EDGES, REGLETS, REVEALS, AND OTHER FEATURES NOT SHOWN ON THE STRUCTURAL DRAWINGS, SEE ARCHITECTURAL DRAWINGS.

SHOTCRETE

1. SHOTCRETE MAY BE USED IN LIEU OF CAST-IN-PLACE CONCRETE AT THE CONTRACTOR'S OPTION WITH THE APPROVAL OF THE ARCHITECT.
2. REFER TO CAST-IN-PLACE GENERAL NOTES FOR STRENGTH REQUIREMENTS FOR EACH CONCRETE CLASS.
3. PRESCONSTRUCTION TESTS SHALL BE REQUIRED. CONTRACTOR TO SUBMIT TEST PLAN FOR REVIEW PRIOR TO COMMENCING WITH TEST PANELS. SHOTCRETE TEST PANELS SHALL BE CONSTRUCTED ON-SITE AND EXECUTED BY THE PROJECT-SPECIFIED NOZZLE OPERATORS UNDER REPRESENTATIVE JOB-SITE CONDITIONS USING THE SPECIFIED SHOTCRETE MIXES. WHERE SHOTCRETE WALLS WILL BE EXPOSED, FACE OF TEST PANELS SHALL BE FINISHED. ALL TEST PANELS SHALL BE CORED AND SAW-CUT FOR EXAMINATION. APPROVED TEST PANELS SHALL BE CONSIDERED THE STANDARD FOR THE PROJECT.
4. ALL EXPOSED CORNERS OR EDGES OF COLUMNS, PIERS, WALLS, BEAMS, ETC., SHALL BE FORMED WITH A 3/4" CHAMFER UNLESS OTHERWISE NOTED ON DRAWINGS.
5. FOR FEATURES, DRIP EDGES, REGLETS, REVEALS, ETC., SEE ARCHITECTURAL DRAWINGS.
6. REBOUND MATERIAL SHALL NOT BE REUSED AS AGGREGATE.

CONCRETE REINFORCEMENT

1. ALL CONCRETE SHALL BE REINFORCED. REINFORCEMENT SHALL BE NEW DEFORMED STEEL BARS, ASTM A615, GRADE 60. [USE ASTM A706 FOR SPECIAL MOMENT RESISTING FRAMES, SHEAR WALLS, AND BARS TO BE WELDED.]
2. ALL CONCRETE REINFORCEMENT DETAILS SHALL CONFORM TO ACI 315, " MANUAL OF STANDARD PRACTICE FOR DETAILING CONCRETE STRUCTURES".
3. CONCRETE COVER SHALL BE TO FACE OF BAR, MECHANICAL COUPLER, OR WELDED HEADED BAR AS FOLLOWS, UNLESS OTHERWISE NOTED ON DRAWINGS:

CAST-IN-PLACE CONCRETE	MINIMUM CONCRETE COVER
CAST AGAINST AND EXPOSED TO EARTH	3"
EXPOSED TO EARTH OR WEATHER	
#5 AND SMALLER	1 ½"
#6 AND LARGER	2"
NOT EXPOSED TO WEATHER OR IN CONTACT WITH EARTH	
SLABS, JOISTS	1"
WALLS	1 ½"
COLUMNS, BEAMS	1 ½"
SLABS ON GRADE	MID-DEPTH

4. CONTRACTOR SHALL SUBMIT SHOP DRAWINGS OF REINFORCEMENT LAYOUTS AND DETAILS FOR REVIEW PRIOR TO FABRICATION. SHOW ALL PROPOSED SPLICE LOCATIONS. FABRICATE FROM APPROVED DRAWINGS ONLY.
5. THE LENGTHS AND SPLICES OF REINFORCEMENT SHOWN ON DRAWINGS REPRESENT A SUGGESTED CONSTRUCTION JOINT LAYOUT. BAR SPLICES MAY BE DELETED AND CONTINUOUS REINFORCEMENT USED AT THE CONTRACTOR'S OPTION. LONG BARS OR BENT BARS SHOWN MAY BE SPLICED IF NECESSARY FOR PLACEMENT OR EASE OF CONSTRUCTION PROVIDED MINIMUM SCHEDULED LAP LENGTHS ARE FOLLOWED WITH APPROVAL FROM THE ARCHITECT. MECHANICAL COUPLERS SHALL BE USED WHERE SHOWN ON THE DRAWINGS AND MAY BE USED IN LIEU OF LAP SPLICES WITH APPROVAL FROM THE ARCHITECT.
6. PROVIDE DOWELS OR CONTINUOUS REINFORCEMENT BETWEEN ALL CONCRETE ELEMENTS, UNLESS OTHERWISE NOTED. IN GENERAL, BAR SPLICES SHALL BE MADE AT POINTS OF MINIMUM STRESS. IN FRAMED BEAMS AND SLABS, SPLICE TOP BARS AT MID-SPAN, BOTTOM BARS OVER SUPPORTS, UNLESS OTHERWISE NOTED. IN GRADE BEAMS SUPPORTED ON SOIL, SPLICE TOP BARS AT COLUMNS, BOTTOM BARS AT MID-SPAN BETWEEN COLUMNS, UNLESS OTHERWISE NOTED ON DRAWINGS. IN GRADE BEAMS SUPPORTED ON PIERS OR PILES, SPLICE TOP BARS AT MID-SPAN BETWEEN SUPPORTS, BOTTOM BARS AT SUPPORTS, UNLESS OTHERWISE NOTED ON DRAWINGS. VERTICAL REINFORCEMENT FROM COLUMNS, PILASTERS, AND WALLS SHALL BE DOWELED TO SUPPORTING FOOTINGS WITH BARS OF SAME SIZE AND SPACING AS VERTICAL REINFORCEMENT UNLESS OTHERWISE NOTED ON DRAWINGS.
7. ALL SPLICES OF #10 AND LARGER REINFORCEMENT SHALL BE MADE USING TYPE II MECHANICAL COUPLERS, UNLESS OTHERWISE SHOWN. LAP SPLICES FOR #10 AND LARGER BARS SHALL NOT BE PERMITTED.
8. TYPE II MECHANICAL COUPLERS SHALL CONFORM TO DIMENSIONAL REQUIREMENTS SHOWN ON THE DRAWINGS, SO AS NOT TO REQUIRE SPECIAL STIRRUPS OR HOOPS, OR VIOLATE THE REQUIRED CLEAR COVER OF CONCRETE. HRC TYPE 510 XTENDER OR EQUAL (NO KNOWN EQUAL). MECHANICAL COUPLERS SHALL BE STAGGERED A MINIMUM OF 3'-0" FROM MECHANICAL COUPLERS ON ADJACENT BARS, UNLESS OTHERWISE NOTED ON DRAWINGS.
9. CONTRACTOR SHALL ORDER ADEQUATE ADDITIONAL UNITS OF REINFORCEMENT SPLICED WITH MECHANICAL COUPLERS AND ADEQUATE ADDITIONAL UNITS OF REINFORCEMENT TERMINATED WITH WELDED HEADED BARS TO FACILITATE THE MINIMUM TESTING REQUIREMENTS TO BE PERFORMED BY THE OWNER'S TESTING AGENCY.
10. THE OWNER'S TESTING AGENCY SHALL TENSION TEST ONE TYPE II MECHANICAL COUPLER FOR EACH ONE HUNDRED DEVICES UTILIZED ON PROJECT. ROUND UP TO NEXT HIGHEST 100 FOR INTERMEDIATE NUMBER OF DEVICES, AND TEST A MINIMUM OF TWO DEVICES. OWNER'S TESTING AGENCY SHALL TENSION TEST ONE WELDED HEADED BAR FOR EACH ONE HUNDRED DEVICES UTILIZED ON PROJECT. ROUND UP TO NEXT HIGHEST 100 FOR INTERMEDIATE NUMBERS AND TEST TWO DEVICES MINIMUM. FAILURE OF A DEVICE SHALL REQUIRE ADDITIONAL TESTS OF ONE IN TEN DEVICES OF THE SAME HEAT OF DEVICE. ADDITIONAL REINFORCEMENT REQUIRED DUE TO FAILED DEVICES SHALL BE AT THE EXPENSE OF THE CONTRACTOR.
11. THE OWNER'S TESTING AGENCY SHALL TORQUE TEST TEN PERCENT OF ALL IN-PLACE TYPE II MECHANICAL COUPLERS TO THE VALUES TABULATED ON THE DRAWINGS. IF ANY ONE TORQUE TEST FAILS, ALL TYPE II MECHANICAL COUPLERS INSTALLED THAT DAY SHALL BE TORQUE TESTED BY THE OWNER'S TESTING AGENCY. THE CONTRACTOR SHALL CORRECT ALL TYPE II MECHANICAL COUPLERS IDENTIFIED AS HAVING FAILED TORQUE TESTS AT NO ADDITIONAL COST TO THE OWNER. THE OWNER'S TESTING AGENCY SHALL RETEST ALL FAILED COUPLERS.
12. [ANY REINFORCEMENT INTERRUPTED BY STRUCTURAL STEEL SHAPES OR PLATES SHALL BE WELDED TO THE INTERRUPTING ELEMENT WITH COMPLETE JOINT PENETRATION WELDS, UNLESS OTHERWISE APPROVED BY THE ARCHITECT.]

WELDED HEADED STUDS

1. ALL STEEL BEAMS SUPPORTING CONCRETE SLABS OR CONCRETE FILL ON METAL DECK SHALL HAVE WELDED STUDS IN ACCORDANCE WITH THE SCHEDULE THE DRAWINGS. MINIMUM SIZE AND SPACING SHALL BE ¾" DIAMETER AT 12" O.C. UNLESS OTHERWISE NOTED.
2. EACH WELDED STUD MAY REPLACE ONE DECK WELD.

STRUCTURAL STEEL

1. STEEL MATERIALS SHALL CONFORM TO THE FOLLOWING:

W-SHAPES, WT-SHAPES	ASTM A 992
CHANNEL AND ANGLE SHAPES	ASTM A 36
RECTANGULAR AND ROUND HSS	ASTM A 500, GRADE C
PIPE	ASTM A 53, GRADE B
PLATES	ASTM A 572, GRADE 50 U.O.N. A36 AS INDICATED
BASE PLATES	ASTM A 572, GRADE 50 U.O.N. A36 AS INDICATED
ANCHOR RODS	ASTM F 1554 GRADE [36] [55 W/ S1] [105]
MACHINE BOLTS	ASTM A 307
HIGH STRENGTH BOLTS	ASTM A 325-N TYP. U.O.N., SC OR X AS INDICATED
WELDED HEADED STUDS	ASTM A 108

2. ALL STRUCTURAL STEEL SHALL CONFORM TO AISC SPECIFICATIONS FOR THE DESIGN, FABRICATION, AND ERECTION OF STRUCTURAL STEEL FOR BUILDINGS.
3. CONTRACTOR SHALL SUBMIT SHOP DRAWINGS FOR REVIEW PRIOR TO FABRICATION. FABRICATE FROM APPROVED DRAWINGS ONLY.
4. ALL HIGH STRENGTH BOLTS SHALL BE SNUG TIGHT ONLY UNLESS OTHERWISE NOTED ON THE DRAWINGS AS SLIP CRITICAL (SC). ALL BOLTED CONNECTIONS NOTED AS SLIP CRITICAL SHALL BE FULLY TENSIONED IN ACCORDANCE WITH THE SPECIFICATIONS.
5. WELDING SHALL ONLY BE PERFORMED BY CERTIFIED WELDERS. ALL WELDING SHALL CONFORM TO AWS SPECIFICATIONS. PROVIDE TEMPORARY BACK-UP PLATES OR WELDS AT ALL COMPLETE JOINT PENETRATION (CJP) WELD LOCATIONS AS REQUIRED; REMOVE PLATES AFTER CJP WELDING AND GRIND AREA SMOOTH WHERE EXPOSED.
6. WHERE FIELD WELDING IS SPECIFICALLY NOTED, THE DESIGNATION IS GIVEN AS A SUGGESTED CONSTRUCTION PROCEDURE ONLY. CONTRACTOR SHALL DETERMINE SUITABILITY OF SHOP OR FIELD WELDING FOR ALL CONDITIONS.
7. DO NOT CUT THROUGH ERECTED STEEL PLATES, BOLTS, ANGLES OR SHAPES WITHOUT PERMISSION OF THE ARCHITECT. WHERE STEEL WILL BE EXPOSED TO VIEW, ALL SLAG AND ROUGH EDGES SHALL BE MECHANICALLY REMOVED TO PROVIDE A SMOOTH EDGE AFTER CUTTING OR BORING. ALL SURFACES CUT BY THERMAL PROCESSES SHALL CONFORM TO SPECIFICATIONS.
8. ALL SHOP AND FIELD WELDING SHALL BE INSPECTED BY THE OWNER'S TESTING AGENCY.
9. SPECIAL WELD PROCEDURES WILL BE REQUIRED WHERE WELDING TO EXISTING STRUCTURAL STEEL IS REQUIRED. THE WELD PROCEDURES SHALL BE PROPOSED BY THE CONTRACTOR AND SUBMITTED FOR REVIEW BY THE ARCHITECT. PROCEDURES FOR WELDING TO EXISTING STRUCTURAL STEEL SHALL BE PRE-QUALIFIED BY THE OWNER'S TESTING AGENCY IN ACCORDANCE WITH AWS D1.1.
10. WHERE STRUCTURAL STEEL IS TO BE ATTACHED USING POST-INSTALLED ANCHORS, ANCHOR HOLES SHALL BE DRILLED PRIOR TO PREPARATION OF STEEL SHOP DRAWINGS AND FABRICATION. DRILLED HOLE LOCATIONS SHALL BE RECORDED AND TRANSFERRED USING TEMPLATES FOR THE PURPOSE OF ACCURATELY LOCATING HOLES IN STRUCTURAL STEEL.
11. SEE ARCHITECTURAL DRAWINGS AND SPECIFICATIONS FOR ADDITIONAL REQUIREMENTS FOR ARCHITECTURALLY EXPOSED STRUCTURAL STEEL (AESS).
12. SHOP PRIME STRUCTURAL STEEL WHERE REQUIRED, SEE SPECIFICATIONS.
13. REFER TO ARCHITECTURAL DRAWINGS AND SPECIFICATIONS FOR PAINTING AND OTHER COATING REQUIREMENTS.
14. PROVIDE HOLES IN ALL STEEL AS REQUIRED TO PREVENT ANY ACCUMULATION OF WATER. ALL SUCH PENETRATIONS THROUGH MAIN MEMBERS SHALL NOT EXCEED 1 1/8" DIA. AND SHALL BE GROUND SMOOTH. THESE DRAINS MUST BE KEPT CLEAN AND OPEN.
15. HOT - DIP GALVANIZE EXTERIOR EXPOSED STEEL MEMBERS & CONNECTIONS AND OTHER MEMBERS SPECIFICALLY SHOWN ON THE DRAWINGS. SEE SPECIFICATIONS FOR FINISH REQUIREMENTS OF EXTERIOR ELEMENTS EXPOSED TO VIEW.
16. [COMPOSITE BEAMS AND GIRDERS REQUIRING SHORING ARE INDICATED ON FRAMING PLANS ("S" INDICATES A SHORED COMPOSITE BEAM).]
17. [CUTTING AND BORING OF EXISTING STEEL SHALL NOT BE DONE EXCEPT WHERE SPECIFICALLY CALLED FOR ON THE DRAWINGS. HOLES THROUGH EXISTING STEEL MAY BE DRILLED, FLAME CUT, OR MADE USING AIR-ARC, AND SHALL NOT BE MORE THAN ½ INCH DIAMETER LARGER THAN REQUIRED TO PASS REINFORCEMENT, ANCHORS, ETC., SHOWN ON DRAWINGS, UNLESS OTHERWISE NOTED.]
18. [DO NOT CUT THROUGH STEEL ANGLES OR RIVETS.]
19. [ALL FIELD FLAME CUTTING AND AIR-ARC CUTTING SHALL BE DONE ONLY BY CERTIFIED WELDERS.]
20. [AFTER CUTTING OR BORING, ALL SLAG AND ROUGH EDGES SHALL BE MECHANICALLY REMOVED TO PROVIDE A SMOOTH EDGE.]
21. STRUCTURAL STEEL MEMBERS AND CONNECTIONS DENOTED "SFRS" SHALL SATISFY REQUIREMENTS FOR THE SEISMIC FORCE RESISTING SYSTEM IN SPECIFICATIONS.

METAL DECK

1. SEE SHEET S_____ FOR DECK PROFILES.
2. STEEL DECK SHALL BE WELDED TO ALL STRUCTURAL STEEL AND TO ADJACENT DECK SECTIONS IN ACCORDANCE WITH THE DECK WELDING SCHEDULE ON SHEET _____.
3. WELDING OF DECK SHALL BE IN ACCORDANCE WITH AWS STANDARDS AND PERFORMED BY WELDERS CERTIFIED FOR LIGHT-GAGE METALS.
4. PROVIDE VENTED DECK FOR ALL DECKS TO RECEIVE CONCRETE FILL UNLESS OTHERWISE NOTED. DECKS WITHOUT CONCRETE FILL SHALL NOT BE VENTED.

els architecture+ urban design
2040 Addison St, Berkeley, CA 94704
510.549.2929 | elsarch.com

PROJECT:

PIEDMONT COMMUNITY POOL

777 MAGNOLIA AVENUE PIEDMONT, CA 94611

PROJECT NUMBER: **21-103**

CLIENT: **Owner**

PROJECT TEAM:

ARCHITECT:
ELS ARCHITECTURE AND URBAN DESIGN
2040 Addison Street
Berkeley, CA 94704
P: 510.549.2929

CIVIL ENGINEER:
BKF ENGINEERS
4670 Willow Road, Suite 250
Pleasanton, CA 94588
P: 925.396.7700

LANDSCAPE ARCHITECT:
SWA
2200 Bridgeway
Sausalito, CA 94965
P: 415.332.5100

STRUCTURAL ENGINEER:
FORELL/ELSESSER
160 Pine Street, Suite 600
San Francisco, CA 94111
P: 415.837.0700

MEP / FIRE / TELECOM / SECURITY:
GUTTMANN & BLAEVOET
2351 Powell Street
San Francisco, CA 94133
P: 415.655.4000

AQUATICS:
AQUATIC DESIGN GROUP
2226 Faraday Avenue
Carlsbad, CA 92008
P: 760.438.8400

SPECIFICATIONS:
TOPFLIGHT SPECS
49 Geary Street, Suite 230
San Francisco, CA 94108-5748
P: 415.546.6033

REVISION

NUMBER	DATE	DESCRIPTION
	4/15/2022	25% Progress Set

ISSUE: **100% DESIGN DEVELOPMENT**

DATE: **APRIL 30, 2022**

STAMP:

NOT FOR CONSTRUCTION

SHEET TITLE: **GENERAL NOTES**

SHEET NUMBER: **S0.0.2**

DRILLED HOLES FOR ANCHORS AND DOWELS IN CONCRETE

1. DRILLED HOLE DEPTH TO ACHIEVE LISTED ANCHOR OR DOWEL EMBEDMENT MAY BE GREATER THAN REQUIRED EMBEDMENT SHOWN IN ANCHOR OR DOWEL TABLES. VERIFY HOLE DEPTH REQUIREMENTS WITH MANUFACTURER. HOLE DEPTH SHALL NOT BE LESS THAN TABULATED DEPTH.
2. VERIFY DRILL BIT TYPE AND DIAMETERS WITH MANUFACTURER.
3. HOLES SHALL NOT BE DRILLED IN CONCRETE THAT HAS NOT ACHIEVED ITS SPECIFIED COMPRESSIVE STRENGTH AND NOT UNTIL A MINIMUM OF TWENTY ONE (21) DAYS AFTER CONCRETE HAS BEEN CAST.
4. USE CARE AND CAUTION AT ALL TIMES TO AVOID CUTTING OR DAMAGING REINFORCEMENT STEEL. DRILL HOLE SIZE AS RECOMMENDED BY MANUFACTURER, UNLESS OTHERWISE NOTED ON THE DRAWINGS. ALL LOCATIONS TO BE DRILLED SHALL BE CAREFULLY PRESCANNED USING EFFECTIVE MEANS PRIOR TO DRILLING. THE USE OF PACHOMETERS MAY NOT BE EFFECTIVE. USE OF X-RAYS WILL NOT BE PERMITTED. DRILL PILOT HOLES WITH SMALLER DIAMETERS THAN FINAL HOLES (3/8" MAXIMUM PILOT HOLE DIAMETER) TO DETECT REINFORCEMENT WHERE OTHER MEANS ARE NOT EFFECTIVE.
5. WHEN INSTALLING ANCHORS OR DOWELS IN EXISTING PRESTRESSED CONCRETE, LOCATE THE PRESTRESSED TENDONS USING NON-DESTRUCTIVE METHODS PRIOR TO DRILLING. EXERCISE CARE AND CAUTION TO AVOID CUTTING OR DAMAGING TENDONS DURING INSTALLATION. MAINTAIN A MINIMUM CLEARANCE OF ONE INCH BETWEEN THE REINFORCEMENT AND THE DRILLED ANCHOR OR DOWEL. CONTRACTOR SHALL REPAIR OR REPLACE DAMAGED TENDONS AT NO COST TO OWNER USING MEANS APPROVED BY THE ARCHITECT PRIOR TO COMMENCEMENT OF REPAIR.
6. WHERE REINFORCEMENT IS ENCOUNTERED, SHIFT THE ANCHOR OR DOWEL LOCATION SO AS TO AVOID THE REINFORCEMENT BAR. CONTACT THE ENGINEER FOR ALL CONDITIONS WHERE REINFORCEMENT IS ENCOUNTERED.
7. ALL ABANDONED HOLES SHALL BE REPAIRED USING APPROVED MATERIALS AND METHODS. SEE SPECIFICATIONS.
8. WHERE ENCASED STRUCTURAL STEEL IS ENCOUNTERED WHILE DRILLING, NOTIFY THE ARCHITECT PRIOR TO DRILLING THROUGH STEEL. THE CONTRACTOR MAY BE REQUIRED TO DRILL THROUGH THE STEEL AS REQUIRED TO ACHIEVE MINIMUM EMBEDMENT. NOTIFY THE ARCHITECT.
9. WHERE STRUCTURAL STEEL IS TO BE ATTACHED USING DRILLED ANCHORS, ANCHOR HOLES SHALL BE DRILLED PRIOR TO PREPARATION OF STEEL SHOP DRAWINGS AND FABRICATION. DRILLED HOLE LOCATIONS SHALL BE RECORDED AND TRANSFERRED USING TEMPLATES FOR THE PURPOSE OF ACCURATELY LOCATING HOLES IN STRUCTURAL STEEL.

EXPANSION ANCHORS IN CONCRETE

1. EXPANSION ANCHORS SHALL BE INSTALLED IN ACCORDANCE WITH THE MANUFACTURER'S RECOMMENDATIONS.
2. EXPANSION ANCHORS SHALL NOT BE USED TO RESIST VIBRATORY OR SHOCK LOADS.
3. NOTE THAT HOLE DEPTH, ho, IS LARGER THAN EMBEDMENT, hnom, LISTED IN TABLE
4. MINIMUM EXPANSION ANCHOR EMBEDMENT SHALL BE AS INDICATED IN THE APPROPRIATE TABLES BELOW, UNLESS OTHERWISE INDICATED ON THE DRAWINGS.
5. THE OWNER'S TESTING AGENCY SHALL PERFORM TENSION LOAD TESTS ON 10% OF EXPANSION ANCHORS TO THE TENSION LOAD VALUES INDICATED IN THE TABLES BELOW. TORQUE LOAD TESTS MAY BE PERFORMED IN LIEU OF TENSION LOAD TESTS FOR NON-STRUCTURAL ANCHORS ONLY. **[*NOTE: O*SHPD CBC SECTION 1913A.7.2 REQUIRES 100% OF PIAs USED FOR STRUCTURAL ANCHORAGE, 50% OF ANCHORS USED FOR NON-STRUCTURAL ANCHORAGE, AND 10% OF ANCHORS USED FOR SILL-BOLTING TO BE TESTED.]**
6. SEE SPECIFICATIONS FOR REQUIREMENTS WHEN AN EXPANSION ANCHOR FAILS A TENSION LOAD TEST. NOTIFY THE ARCHITECT IMMEDIATELY WHEN AN EXPANSION ANCHOR FAILS A TEST.
7. EXPANSION ANCHORS SPECIFICALLY NOTED ON THE DRAWINGS AS "NO TEST REQUIRED" DO NOT REQUIRE LOAD TESTS.
8. THE TESTING AGENCY SHALL DEVELOP AND UTILIZE AN EFFECTIVE METHOD OF FIELD MARKING EXPANSION ANCHOR TEST LOCATIONS AND RESULTS.
9. THE TENSION TEST VALUES FOR EXPANSION ANCHORS ARE BASED ON THE LESSER OF THE FOLLOWING:
   - 125% OF THE "DESIGN STRENGTH" VALUES AS COMPUTED IN ACCORDANCE WITH ACI 318-11, CBC 2013 SECTION 1913.2.11.2 AND THE INTERNATIONAL CODE COUNCIL EVALUATION SERVICES (ICC-ES) OR IAPMO-UES TEST REPORTS FOR THE MANUFACTURERS LISTED IN THE SPECIFICATIONS FOR 3,000 PSI CONCRETE AND,
   - 80% OF THE SPECIFIED YIELD STRENGTH OF THE EXPANSION ANCHOR.
10. TENSION TEST VALUES ARE "FREE-FIELD" VALUES AND APPLY ONLY FOR DOWELS AND ANCHORS WITH NO REDUCTIONS IN STRENGTH DUE TO SPACING AND EDGE DISTANCE. FOR EXPANSION ANCHORS INSTALLED LESS THAN 1.5x DESIGN DEPTH (Hnom) FROM THE EDGE OF CONCRETE, CONTACT THE EOR FOR TEST VALUES.
11. EXPANSION ANCHORS PLACED IN CONCRETE SHALL BE HILTI KB-TZ OR SIMPSON STRONG BOLT 2 AND SHALL CONFORM TO ICC-ES REPORTS ESR-1917 AND ESR-3037, RESPECTIVELY, OR APPROVED EQUAL.
12. EXPANSION ANCHORS SPECIFIED ON THE DRAWINGS SHALL BE HILTI KB-TZ WITH EMBEDMENT DEPTHS SHOWN ON THE TABLES BELOW. AT THE CONTRACTORS OPTION, AND AT NO ADDITIONAL EXPENSE TO THE PROJECT, THE CONTRACTOR MAY SUBSTITUTE A SIMPSON STRONG-BOLT ANCHOR PER THE TABLE LISTED BELOW.
13. IF ANCHORS ARE INSTALLED WHERE THE EDGE DISTANCE ON ONE SIDE IS NO LARGER THAN THE MINIMUM EDGE DISTANCE, THE TENSION TEST LOAD SHALL BE REDUCED TO 60%. IF THE ANCHORS ARE INSTALLED WHERE THE EDGE DISTANCE ON TWO SIDES IS NO LARGER THAN THE MINIMUM EDGE DISTANCE ,THE TENSION TEST LOAD SHALL BE REDUCED TO 45% .

EXPANSION ANCHORS (EXA) INSTALLED IN NORMAL WEIGHT CONCRETE (HILTI Kwik Bolt TZ)

ANCHOR DIAMETER (in)	Hnom, Nominal Depth (in)	TENSION TEST LOAD (Pounds)	TORQUE TEST (ft-lbf)
3/8"	3 1/16"	2780	25
1/2"	3 5/8"	4330	40
5/8"	4 7/16"	6000	60
3/4"	5 9/16"	7820	110

NORMAL WEIGHT CONCRETE SUBSTITUTION TABLE

HILTI-KBTZ	SIMPSON STRONGBOLT 2			
ANCHOR DIAMETER (in)	ANCHOR DIAMETER (in)	Hnom, Nominal Depth (in)	TENSION TEST LOAD (Pounds)	TORQUE TEST (ft-lbf)
3/8"	1/2"	3"	2780	30
1/2"	5/8"	4 1/8"	4330	60
5/8"	5/8"	5 1/8"	6000	90
3/4"	1"	8 3/4"	7820	150

RESIN ANCHORS AND DOWELS IN CONCRETE

1. DRILLED RESIN ANCHORS AND DOWELS SHALL BE INSTALLED IN ACCORDANCE WITH THE MANUFACTURER'S RECOMMENDATIONS.
2. ANCHORS INSTALLED IN CONCRETE NOT IN CONTACT WITH THE GROUND SHALL BE INSTALLED IN DRY CONCRETE. ANCHORS INSTALLED IN CONCRETE IN CONTACT WITH THE GROUND ARE PERMITTED TO BE INSTALLED IN WATER-SATURATED CONCRETE. IT IS NOT PERMITTED TO INSTALL ANCHORS IN WATER-FILLED HOLES IN ANY CONDITION.
3. ANCHOR CAPACITIES ARE BASED ON A MAXIMUM SHORT-TERM TEMPERATURE OF 130° F AND A MAXIMUM LONG-TERM TEMPERATURE OF 110° F.
4. HOLES THAT ARE DRILLED USING A CARBIDE DRILL BIT DO NOT REQUIRE SUPPLEMENTAL ROUGHENING. FOR HILTI HIT-RE 500 V3, HOLES THAT ARE DRILLED USING A DIAMOND CORE BIT SHALL BE ROUGHENED WITH THE HILTI TE-YRT ROUGHENING TOOL PER THE MANUFACTURER'S REQUIREMENTS. HOLES DRILLED USING DIAMOND CORE BITS ARE NOT PERMITTED FOR SIMPSON SET-3G.
5. HOLES SHALL BE CLEANED PER THE MANUFACTURER'S RECOMMENDATIONS.
6. INSTALLATION OF ADHESIVE ANCHORS HORIZONTALLY OR UPWARDLY INCLINED TO SUPPORT SUSTAINED TENSION LOADS SHALL BE PERFORMED BY PERSONNEL CERTIFIED BY AN APPLICABLE CERTIFICATION PROGRAM. CERTIFICATION SHALL INCLUDE WRITTEN AND PERFORMANCE TESTS IN ACCORDANCE WITH THE ACI / CRSI ANCHOR INSTALLER CERTIFICATION PROGRAM OR EQUIVALENT.
7. DRILLED RESIN ANCHORS AND DOWELS SHALL NOT BE USED TO RESIST VIBRATORY OR SHOCK (IMPACT) LOADS.
8. MINIMUM ANCHOR OR DOWEL EMBEDMENT SHALL BE AS INDICATED IN THE APPROPRIATE TABLES BELOW, UNLESS OTHERWISE INDICATED ON THE DRAWINGS.
9. ANCHORS SHALL BE ASTM A193 GRADE B7 ALL-THREAD ROD WITH ZINC ELECTROPLATED COATING COMPLYING WITH ASTM B633 SC 1 OR HOT-DIP GALVANIZED COMPLYING WITH ASTM A153, CLASS C OR D , EXCEPT AS NOTED OTHERWISE ON THE DRAWINGS OR IN THE SPECIFICATIONS. STAINLESS STEEL ANCHORS SHALL BE ASTM F593 OR ISO 3506 A4, U.O.N. DOWELS SHALL BE ASTM A 615 GRADE 60, EXCEPT AS NOTED OTHERWISE ON DRAWINGS OR IN THE SPECIFICATIONS.
10. THE OWNERS TESTING AGENCY SHALL PERFORM TENSION LOAD TESTS ON 10% OF RESIN ANCHORS AND DOWELS TO THE TENSION LOAD VALUES INDICATED IN THE TABLES BELOW. **[NOTE: OSHPD A CHAPTERS - CBC 2013 SECTION 1913.2.11.2 REQUIRES 100% OF PIAs USED FOR STRUCTURAL ANCHORAGE, 50% OF ANCHORS USED FOR NON-STRUCTURAL ANCHORAGE, AND 10% OF ANCHORS USED FOR SILL-BOLTING TO BE TESTED.]**
11. WHEN ANCHOR OR DOWEL FAILS A TENSION LOAD TEST, NOTIFY THE ARCHITECT IMMEDIATELY. REFER TO SPECIFICATIONS FOR REPLACEMENT AND RETESTING REQUIREMENTS. ABANDONED HOLES SHALL BE PATCHED.
12. ANCHORS AND DOWELS SPECIFICALLY NOTED ON THE DRAWINGS AS "NO TEST REQUIRED," DO NOT REQUIRE LOAD TESTS.
13. THE OWNER'S TESTING AGENCY SHALL DEVELOP AND UTILIZE AN EFFECTIVE METHOD FOR FIELD MARKING LOCATIONS OF ANCHOR AND DOWEL TESTS.
14. THE TENSION LOAD TEST VALUES FOR ANCHORS ARE BASED ON THE LESSER OF THE FOLLOWING:
   - 1.25X "DESIGN STRENGTH" VALUES AS COMPUTED IN ACCORDANCE WITH ACI 318-11, CBC 2013 SECTION 1913.2.11.2 AND THE INTERNATIONAL CODE COUNCIL EVALUATION SERVICES (ICC-ES) OR IAPMO-UES TEST REPORTS FOR THE MANUFACTURERS LISTED IN THE SPECIFICATION FOR 2,500 PSI CONCRETE, AND
   - 80% OF THE SPECIFIED YIELD STRENGTH OF THE DOWEL OR THREADED ROD.
15. TENSION TEST VALUES BELOW ARE "FREE-FIELD" VALUES AND APPLY ONLY FOR DOWELS AND ANCHORS WITH NO REDUCTIONS IN STRENGTH DUE TO SPACING AND EDGE DISTANCE. FOR DOWELS OR ANCHORS INSTALLED LESS THAN 1.5x MINIMUM EMBEDMENT (Hef) FROM THE EDGE OF CONCRETE, CONTACT THE EOR FOR TEST VALUES. THIS TABLE (EMBEDMENT DEPTHS & TEST VALUES) APPLY ONLY TO ITEMS SPECIFICALLY CALLED OUT AS RESIN ANCHORS / DOWELS ON THE DRAWINGS, OR FOR ITEMS WHERE RESIN ANCHORS / DOWELS ARE LISTED AS AN OPTION.
16. RESIN ANCHORS PLACED IN CONCRETE SHALL BE HILTI HIT-RE 500-V3 OR SIMPSON SET-3G AND CONFORM TO ICC-ES REPORTS OR ESR-3814 OR ESR-4057, OR APPROVED EQUAL.
17. IF ANCHORS ARE INSTALLED WHERE THE EDGE DISTANCE ON ONE SIDE IS NO LARGER THAN THE MINIMUM EDGE DISTANCE, THE TENSION TEST LOAD SHALL BE REDUCED TO 50%. IF THE ANCHORS ARE INSTALLED WHERE THE EDGE DISTANCE ON TWO SIDES IS NO LARGER THAN THE MINIMUM EDGE DISTANCE ,THE TENSION TEST LOAD SHALL BE REDUCED TO 30%.

EXPANSION ANCHORS (EXA) INSTALLED IN LIGHTWEIGHT CONCRETE (HILTI Kwik Bolt TZ)

ANCHOR DIAMETER (in)	Hnom, Nominal Depth (in)	TENSION TEST LOAD (Pounds)	TORQUE TEST (ft-lbf)
3/8"	3 1/16"	1670	25
1/2"	3 5/8"	2610	40
5/8"	4 7/16"	3600	60
3/4"	5 9/16"	4670	110

LIGHTWEIGHT CONCRETE SUBSTITUTION TABLE

HILTI-KBTZ	SIMPSON STRONGBOLT 2			
ANCHOR DIAMETER (in)	ANCHOR DIAMETER (in)	Hnom, Nominal Depth (in)	TENSION TEST LOAD (Pounds)	TORQUE TEST (ft-lbf)
3/8"	1/2"	3"	1670	30
1/2"	5/8"	4 1/8"	2610	60
5/8"	5/8"	5 1/8"	3600	90
3/4"	1"	8 3/4"	4670	150

HILTI HIT-RE-500-V3 RESIN DOWELS INSTALLED IN EXISTING CONCRETE

BAR SIZE	hef (in)	TENSION TEST LOADS (Pounds): NORMAL WEIGHT CONCRETE	TENSION TEST LOADS (Pounds): LIGHT WEIGHT CONCRETE
#3	4"	5120	2310
#4	6"	10120	4650
#5	7 1/2"	14120	7430
#6	9"	18620	10870
#7	10"	21750	13000
#8	12"	28620	17120

RESIN DOWELS INSTALLED IN NORMAL WEIGHT CONCRETE SUBSTITUTION TABLE

HILTI RE500 V3	SIMPSON SET 3G		
BAR SIZE	BAR SIZE	hef (in)	TENSION TEST LOAD
#3	#3	4 3/4"	5280
#4	#4	7 1/4"	10620
#5	#5	7 1/2"	15500
#6	#6	10 1/4"	20250
#7	#7	12 1/4"	23750
#8	#8	16 1/2"	31250

NOTE: IF EMBEDMENT IN THE DRAWINGS IS LONGER THAN WHAT IS SPECIFIED IN HILTI TABLES, NO SUBSTITUTION IS ALLOWED.

RESIN DOWELS INSTALLED IN LIGHT WEIGHT CONCRETE SUBSTITUTION TABLE

HILTI RE500 V3	SIMPSON SET 3G		
BAR SIZE	BAR SIZE	hef (in)	TENSION TEST LOAD
#3	#3	4 3/4"	2370
#4	#4	7 1/2"	4810
#5	#5	7 3/4"	7620
#6	#6	9 3/4"	11120
#7	#7	12 1/4"	14250
#8	#8	16 1/4"	18750

NOTE: IF EMBEDMENT IN THE DRAWINGS IS LONGER THAN WHAT IS SPECIFIED IN HILTI TABLES, NO SUBSTITUTION IS ALLOWED.

HILTI HIT-RE-500-V3 RESIN ANCHORS INSTALLED IN EXISTING CONCRETE

BAR SIZE	hef (in)	TENSION TEST LOADS (Pounds): NORMAL WEIGHT CONCRETE	TENSION TEST LOADS (Pounds): LIGHT WEIGHT CONCRETE
3/8"	4"	4560	2180
1/2"	6"	8310	4370
5/8"	7 1/2"	13250	6750
3/4"	9"	18500	9620
7/8"	10"	21750	12370
1"	12"	28500	17000

RESIN ANCHORS INSTALLED IN NORMAL WEIGHT CONCRETE SUBSTITUTION TABLE

HILTI RE500 V3	SIMPSON SET 3G		
BAR SIZE	BAR SIZE	hef (in)	TENSION TEST LOAD
3/8"	1/2"	4"	5030
1/2"	5/8"	6"	9900
5/8"	3/4"	10 1/4"	15410
3/4"	7/8"	10 1/4"	20270
7/8"	1"	12 1/2"	23870
1"	1"	16 1/4"	31310

NOTE: IF EMBEDMENT IN THE DRAWINGS IS LONGER THAN WHAT IS SPECIFIED IN HILTI TABLES, NO SUBSTITUTION IS ALLOWED.

RESIN ANCHORS INSTALLED IN LIGHT WEIGHT CONCRETE SUBSTITUTION TABLE

HILTI RE500 V3	SIMPSON SET 3G		
BAR SIZE	BAR SIZE	hef (in)	TENSION TEST LOAD
3/8"	3/8"	4 1/2"	2250
1/2"	1/2"	7"	4460
5/8"	5/8"	7"	6950
3/4"	3/4"	8 3/4"	9870
7/8"	7/8"	11 1/2"	12680
1"	1"	16 1/2"	17520

NOTE: IF EMBEDMENT IN THE DRAWINGS IS LONGER THAN WHAT IS SPECIFIED IN HILTI TABLES, NO SUBSTITUTION IS ALLOWED.

CONCRETE SCREWS IN NORMAL WEIGHT CONCRETE (HILTI KWIK HUS EZ)

HILTI KWIK HUS EZ		SIMPSON TITEN HD	
SCREW DIA. (in)	Hnom (in)	SCREW DIA. (in)	hef (in)
1/4"	2 1/2"	1/4"	1 3/4"
3/8"	3 1/4"	1/2"	3 1/2"
1/2"	4 1/4"	5/8"	5 1/4"
5/8"	5"	3/4"	5 3/4"
3/4"	6 1/4"	N/A"	N/A

CONCRETE SCREWS IN LIGHTWEIGHT CONCRETE (HILTI KWIK HUS EZ)

HILTI KWIK HUS EZ		SIMPSON TITEN HD	
SCREW DIA. (in)	Hnom (in)	SCREW DIA. (in)	hef (in)
1/4"	2 1/2"	1/4"	1 3/4"
3/8"	3 1/4"	1/2"	3 1/2"
1/2"	4 1/4"	5/8"	5 1/4"
5/8"	5"	3/4"	5 3/4"
3/4"	6 1/4"	N/A"	N/A

UNDERCUT ANCHORS IN CONCRETE

1. UNDERCUT ANCHORS SHALL BE INSTALLED IN ACCORDANCE WITH THE MANUFACTURER'S RECOMMENDATIONS.
2. THE MINIMUM DEPTH OF DRILLED HOLE SHALL BE AS REQUIRED BY THE MANUFACTURER FOR THE SIZE OF ANCHOR INDICATED ON THE DRAWINGS.
3. THE OWNER'S TESTING AGENCY SHALL VERIFY RED MARKINGS ON THREADED ROD OF ANCHOR, OR MINIMUM NUMBER OF VISIBLE THREADS, AS APPLICABLE, ARE VISIBLE ABOVE THE TOP OF ANCHOR SLEEVE FOR ALL UNDERCUT ANCHORS.
4. THE OWNER'S TESTING AGENCY SHALL PROVIDE SPECIAL INSPECTION FOR 25% OF ALL UNDERCUT ANCHOR INSTALLATIONS TO VERIFY TORQUE SETTING REQUIREMENTS CONFORM WITH THE MANUFACTURER'S RECOMMENDATIONS.
5. THE OWNER'S TESTING AGENCY SHALL PERFORM TENSION LOAD TESTS ON 25% OF ALL UNDERCUT ANCHORS INSTALLED TO THE TENSION LOAD VALUES INDICATED IN THE TABLE BELOW.
6. SEE SPECIFICATIONS FOR FULL REQUIREMENTS WHEN AN UNDERCUT ANCHOR FAILS THE TENSION LOAD TESTS. NOTIFY THE ARCHITECT IMMEDIATELY WHEN AN UNDERCUT ANCHOR FAILS A TENSION LOAD TEST.
7. TESTING AGENCY SHALL DEVELOP AND UTILIZE AN EFFECTIVE METHOD OF FIELD MARKING SUCCESSFUL AND FAILED UNDERCUT ANCHOR TEST LOCATIONS. IN LIEU OF FIELD MARKING TEST LOCATIONS, A DETAILED DRAWING RECORD SET SHALL BE ACCEPTABLE.
8. THE TENSION LOAD TEST VALUES FOR UNDERCUT ANCHORS ARE BASED ON 1.25X "DESIGN STRENGTH" AS COMPUTED BY ACI 318-14 AND CBC 2016 SECTION 1901.3.4.4 IN THE ICC-ES EVALUATION TEST REPORTS OF THE MANUFACTURERS LISTED IN THE SPECIFICATIONS FOR CONCRETE WITH A MINIMUM COMPRESSIVE STRENGTH OF 3,000 PSI.

UNDERCUT ANCHORS INSTALLED IN EXISTING NORMAL WEIGHT CONCRETE

ANCHOR DESIGNATION: HILTI HDA	ANCHOR DESIGNATION: DRILLCO MAXIBOLT	ANCHOR DESIGNATION: SIMPSON TORQ-CUT	MINIMUM EMBEDMENT DEPTH	TENSION LOAD TEST VALUE (Pounds)
M10	3/8"	-	4 1/4"	5280
M12	1/2"	1/2" DIA.	5 3/4"	7976
M16	5/8"	5/8" DIA.	8"	14,310
M20	3/4"	3/4" DIA.	10 1/4"	30,574

RESIN ANCHORS, DOWELS, EXPANSION ANCHORS AND SCREW ANCHORS INTO CMU ONLY

1. DRILLED RESIN ANCHORS, DOWELS, EXPANSION ANCHORS AND SCREW ANCHORS SHALL BE INSTALLED IN ACCORDANCE WITH THE MANUFACTURER'S RECOMMENDATIONS INTO CMU.
2. DRILLED RESIN ANCHORS, DOWELS, EXPANSION ANCHORS AND SCREW ANCHORS SHALL NOT BE USED TO RESIST VIBRATORY OR SHOCK (IMPACT) LOADS.
3. MINIMUM RESIN ANCHOR OR DOWEL, EXPANSION ANCHOR AND SCREW ANCHOR NOMINAL EMBEDMENT (H NOM) SHALL BE AS INDICATED IN THE APPROPRIATE TABLES BELOW, UNLESS OTHERWISE INDICATED ON THE DRAWINGS.
4. CMU BLOCKS SHALL BE SOLID GROUTED AND CLOSE ENDED. CMU SHALL BE LW, MW OR NW WITH MIN. f'm OF MASONRY BLOCK OF 2000 PSI AND 2000 PSI MORTAR COMPRESSIVE STRENGTH MINIMUM. 2000 PSI GROUT STRENGTH AND MINIMUM ALLOWABLE SIZE OF 8" x 8" x 16" LONG.
5. RESIN ANCHOR INSERTS SHALL BE ASTM A193 GRADE B7 ALL-THREAD ROD, EXCEPT AS NOTED OTHERWISE ON THE DRAWINGS OR IN THE SPECIFICATIONS. DOWELS SHALL BE ASTM A 615 GRADE 60, EXCEPT AS NOTED OTHERWISE ON DRAWINGS OR IN THE SPECIFICATIONS.
6. EXPANSION ANCHORS AND SCREW ANCHORS SHALL BE MANUFACTURED OF CARBON STEEL WITH MINIMUM 70,000 PSI YIELD STRENGTH AND SHALL BE ZINC PLATED AT A MINIMUM OR MECHANICALLY GALVANIZED AS INDICATED ON PLANS.
7. ANCHORS ARE LIMITED TO ONE ANCHOR PER CELL AT EITHER TOP OF WALL OR FACE OF WALL AS INDICATED WITH MINIMUM END, EDGE & SPACING AS LISTED BY MANUFACTURER.
8. RESIN ANCHORS PLACED INTO CMU SHALL BE HILTI HY-270 PER THE MANUFACTURER'S RECOMMENDATIONS OR SIMPSON SET-XP OR AT-XP AND SHALL COMPLY TO ICC-ES REPORT ICC-ES ESR 2682, IAPMO-UES REPORTS ER-265 AND ER-28 RESPECTIVELY, U.O.N.

THREADED RODS OR DOWELS IN THE FACE OF GROUT-FILLED CONCRETE MASONRY UNITS

ANCHOR DIAMETER (in)	EMBEDMENT (in)	LOAD (Pounds)
3/8"	3 3/8"	2,480
1/2"	4 1/2"	4,070
5/8"	5 5/8"	5,680
3/4"	6 3/4"	7,620

THREADED RODS OR DOWELS IN THE SIDE OF GROUT-FILLED CONCRETE MASONRY UNITS

ANCHOR DIAMETER (in)	EMBEDMENT (in)	LOAD (Pounds)
1/2"	4 1/2"	1,980
5/8"	5 5/8"	2,400
3/4"	6 3/4"	2,400

CONCRETE SCREWS

1. INSTALL SCREW ANCHORS PER MANUFACTURER'S INFORMATION AND ICC REPORT INSTRUCTIONS. SPECIAL INSPECTION IS REQUIRED PER SECTION 1705A OF THE CBC AND THE REQUIREMENTS OF THE ICC REPORTS. INSTALLED ANCHORS SHALL BRING CONNECTED PLIES INTO FIRM CONTACT, MEETING THE INSTALL TORQUE BUT NOT EXCEEDING THE MAXIMUM INSTALL TORQUE.
2. CONTRACTOR TO VERIFY MINIMUM EDGE DISTANCES, SPACING AND THICKNESS ARE IN ACCORDANCE w/ SCHEDULE PRIOR TO INSTALLING ANCHOR.
3. HOLES TO BE DRILLED w/ ROTARY DRILL ONLY. WHEN INSTALLING DRILLED-IN ANCHORS IN EXISTING REINFORCED CONCRETE, USE CARE AND CAUTION TO AVOID CUTTING OR DAMAGING THE EXISTING REINFORCING BARS. MAINTAIN A REASONABLE CLEARANCE BETWEEN REINFORCEMENT AND THE DRIILED-IN ANCHOR. FILL ABANDONED HOLES w/ HIGH STRENGTH GROUT.
4. THE SPECIAL INSPECTOR MUST BE ON THE JOBSITE PERIODICALY DURING ANCHOR INSTALLATION TO VERIFY ANCHOR TYPE, ANCHOR DIMENSIONS, HOLE CLEANLINESS, EMBEDMENT DEPTH, CONCRETE TYPE, CONCRETE COMPRESSIVE STRENGTH, DRILL BIT DIAMETER, HOLE DPTH, EDGE DISTANCE(S), ANCHOR SPACING(S), CONCRETE THICKNESS, AND TIGHTENING TORQUE.
5. MINIMUM CONCRETE SCREW EMBEDMENT SHALL BE AS INDICATED ON THE DRAWINGS.
6. NO TESTING OF CONCRETE SCREWS IS REQUIRED. A VISUAL INSPECTION OF CONCRETE SCREW INSTALLATION IS REQUIRED AT EACH INSTALLATION LOCATION.
7. CONCRETE SCREWS PLACED IN CONCRETE SHALL BE SIMPSON TITEN HD OR HILTI KWIK HUS-EZ AND SHALL CONFORM TO ICC REPORT ESR-2173 OR ESR-3027, RESPECTIVELY.

CONCRETE MASONRY UNITS (CMU)

1. REFER TO ARCHITECTURAL LAYOUT, DRAWINGS, AND SPECIFICATIONS FOR DETAILS AND EXACT DIMENSIONS OF MASONRY WORK INCLUDING FINISHES (COLORS, ETC.), COURSINGS, REGLETS, WEEP HOLES, WATERPROOFING, AND FLASHING.
2. FOR CMU COURSING AND LAYOUT, SEE ARCHITECTURAL DRAWINGS.
3. SEE ARCHITECTURAL DRAWINGS FOR LOCATIONS OF CMU CONTROL JOINTS. SEE TYPICAL CMU CONTROL JOINT DETAIL FOR SPECIAL REINFORCING AT CMU CONTROL JOINTS.
4. CELLS SHALL BE SOLID GROUTED.
5. MINIMUM MASONRY COMPRESSIVE STRENGTH AT 28 DAYS, f'm = 2000 psi, UNLESS OTHERWISE NOTED.
6. MASONRY MATERIALS SHALL CONFORM TO THE FOLLOWING U.O.N.:

   CONCRETE MASONRY UNITS: ASTM C 90, NORMALWEIGHT, HOLLOW LOADBEARING UNITS (MIN. COMPRESSIVE STRENGTH = 2000 psi)

   GROUT: ASTM C 476 (MIN. COMPRESSIVE STRENGTH = 2000 psi)

   MORTAR : ASTM C 270, TYPE M OR S

7. REINFORCEMENT STEEL:

   REINFORCEMENT TO BE WELDED: ASTM A 706
   ALL OTHER REINFORCEMENT: ASTM A 615, GRADE 60
   JOINT REINFORCEMENT: ASTM A 951

8. FOR CMU REINFORCEMENT BAR BENDS, HOOKS, AND OFFSETS - SEE TYPICAL CONCRETE DETAILS.
9. CMU REINFORCEMENT STRAIGHT BAR DEVELOPMENT SHALL BE 48 BAR DIAMETERS. HOOKED BAR DEVELOPMENT SHALL BE 33 BAR DIAMETERS, AND LAP SPLICES SHALL BE 72 BAR DIAMETERS, U.O.N. SEE TYPICAL CONCRETE DETAILS FOR DEFINITIONS OR DEVELOPMENT LENGTH AND SPLICE LENGTH DEFINITIONS.
10. WHERE MULTIPLE BARS REQUIRE LAPS IN THE SAME CELL OR COURSE, STAGGER SPLICE LOCATIONS A MINIMUM OF 3 FEET.
11. VERTICAL REINFORCEMENT:
    - VERTICAL REINFORCING OF LOAD BEARING CMU WALLS SHALL BE PER REINFORCING SCHEDULE ON SHEET **TYPICAL CMU PLAN DETAIL**, UNLESS NOTED OR DETAILED OTHERWISE.
    - THE FIRST CELL AT CORNERS, ENDS OF WALLS, WALL INTERSECTIONS AND AT EACH SIDE OF OPENINGS SHALL BE REINFORCED WITH 2 VERTICAL BARS TO MATCH TYPICAL WALL REINFORCEMENT, U.O.N. EXTEND REINFORCING FROM FOUNDATION TO TOP OF WALL.
    - VERTICAL REINFORCING IN GROUTED CELLS AND PILASTERS SHALL BE HELD IN PLACE BY BAR POSITIONERS SET IN THE MASONRY JOINTS.
12. HORIZONTAL REINFORCEMENT:
    - HORIZONTAL REINFORCING SHALL CONSIST OF CONTINUOUS, FULLY GROUTED BOND BEAMS.
    - MAXIMUM SPACING BETWEEN BOND BEAMS SHALL NOT EXCEED 48 INCHES ON CENTER.
    - SIZE AND SPACING OF HORIZONTAL REINFORCING OF LOAD BEARING CMU WALL SHALL BE PER REINFORCING ON SHEET **TYPICAL CMU PLAN DETAIL**, UNLESS NOTED OR DETAILED OTHERWISE.
    - HOOK HORIZONTAL REINFORCING AT WALL ENDS WITH STANDARD HOOK, TYP
13. CMU WALL REINFORCEMENT TO BE PLACED AT WALL CENTERLINE U.O.N.

els architecture+ urban design
2040 Addison St, Berkeley, CA 94704
510.549.2929 | elsarch.com

PROJECT:

PIEDMONT COMMUNITY POOL

777 MAGNOLIA AVENUE PIEDMONT, CA 94611

PROJECT NUMBER: 21-103

CLIENT: Owner

PROJECT TEAM:

ARCHITECT:
ELS ARCHITECTURE AND URBAN DESIGN
2040 Addison Street
Berkeley, CA 94704
P: 510.549.2929

CIVIL ENGINEER:
BKF ENGINEERS
4670 Willow Road, Suite 250
Pleasanton, CA 94588
P: 925.396.7700

LANDSCAPE ARCHITECT:
SWA
2200 Bridgeway
Sausalito, CA 94965
P: 415.332.5100

STRUCTURAL ENGINEER:
FORELL/ELSESSER
160 Pine Street, Suite 600
San Francisco, CA 94111
P: 415.837.0700

MEP / FIRE / TELECOM / SECURITY:
GUTTMANN & BLAEVOET
2351 Powell Street
San Francisco, CA 94133
P: 415.655.4000

AQUATICS:
AQUATIC DESIGN GROUP
2226 Faraday Avenue
Carlsbad, CA 92008
P: 760.438.8400

SPECIFICATIONS:
TOPFLIGHT SPECS
49 Geary Street, Suite 230
San Francisco, CA 94108-5748
P: 415.546.6033

REVISION

NUMBER	DATE	DESCRIPTION
	4/15/2022	25% Progress Set

ISSUE: **100% DESIGN DEVELOPMENT**

DATE: **APRIL 30, 2022**

STAMP:

NOT FOR CONSTRUCTION

SHEET TITLE: **GENERAL NOTES**

SHEET NUMBER: **S0.0.3**

LEGEND

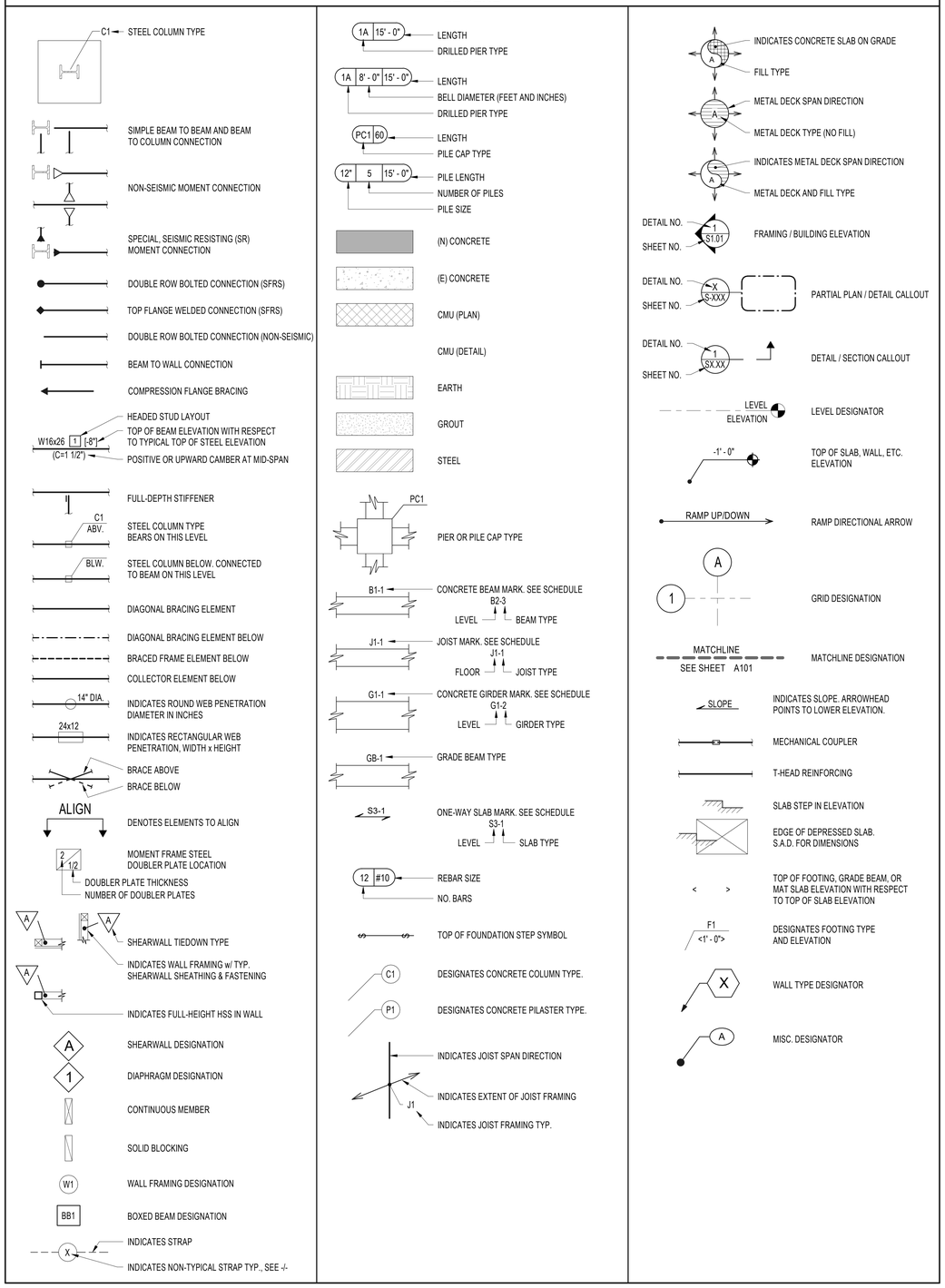

ABBREVIATIONS

BRBF	
ABV.	ABOVE
ALT.	ALTERNATE
A.B.	ANCHOR BOLT
A.R.	ANCHOR ROD
&	AND
@	AT
B.S.	BACK SIDE
BM.	BEAM
BRG.	BEARING
BLW.	BELOW
BTW.	BETWEEN
BOTT.	BOTTOM
B.O.	BOTTOM OF
B.N.	BOUNDARY NAILING
BRBF	BUCKLING RESTRAINED BRACED FRAME
C.I.P.	CAST-IN-PLACE
CTR'D.	CENTERED
C.L.	CENTERLINE
CLR.	CLEAR
COL.	COLUMN
CJP.	COMPLETE PENETRATION JOINT
CONC.	CONCRETE
CMU	CONCRETE MASONRY UNIT
C.S.	CONCRETE SCREW
COND.	CONDITION
CONN.	CONNECTION
C.J.	CONSTRUCTION JOINT
CONT.	CONTINUOUS
D.B.A.	DEFORMED BAR ANCHOR
DET.	DETAIL
DIAG.	DIAGONAL
DIA. or Ø	DIAMETER
DBL.	DOUBLE
D.F.	DOUGLAS FIR
DWL.	DOWEL
DN.	DOWN
DWG.	DRAWING(S)
EA.	EACH
E.F.	EACH FACE
E.S.	EACH SIDE
E.W.	EACH WAY
E.N.	EDGE NAILING
EL. or ELEV.	ELEVATION
EQ.	EQUAL
(E)	EXISTING
E.P.S.	EXPANDED POLYSTYRENE
EXA	EXPANSION ANCHOR
E.J.	EXPANSION JOINT
F.O.C.	FACE OF CONCRETE
F.O.S.	FACE OF STUD
F.O.W.	FACE OF WALL
F.S.	FAR SIDE
F.N.	FIELD NAILING
FIN.	FINISH
FLG.	FLANGE
FLR.	FLOOR
FTG.	FOOTING
FDN.	FOUNDATION
FRMG.	FRAMING
GALV.	GALVANIZED
G.L.	GLU-LAM
GR.	GRADE
G.B.	GRADE BEAM
H.S.	HEADED STUD
HDR.	HEADER
HSB	HIGH STRENGTH BOLT
HSS	HOLLOW STRUCTURAL SHAPE

ABBREVIATIONS

H. or HORIZ.	HORIZONTAL
I.F.	INSIDE FACE
JT.	JOINT
JST.	JOIST
L.S.	LAG SCREW
LLH.	LONG LEG HORIZONTAL
LLV.	LONG LEG VERTICAL
MB	MACHINE BOLT
MAX.	MAXIMUM
MIN.	MINIMUM
N.S.	NEAR SIDE
(N)	NEW
N/A	NOT APPLICABLE
N.I.C.	NOT IN CONTRACT
N.T.S.	NOT TO SCALE
O.C.	ON CENTER
O.W.S.J.	OPEN WEB STEEL JOIST
OP'G. or OPG	OPENING
O.H.	OPPOSITE HAND
O.S.B.	ORIENTED STRAND BOARD
O.F.	OUTSIDE FACE
PJP	PARTIAL JOINT PENETRATION
d	PENNY (nail size, as in 10d)
PL.	PLATE
PLY. or P.W.	PLYWOOD
P.T.	POST-TENSION or PRESSURE TREATED
RWD.	REDWOOD
REINF.	REINFORCING
REQ.	REQUIRED
R.A.	RESIN ANCHOR
R.D.	RESIN DOWEL
R.O.	ROUGH OPENING
SECT.	SECTION
S.A.D.	SEE ARCHITECTURAL DRAWINGS
S.C.D.	SEE CIVIL DRAWINGS
S.E.D.	SEE ELECTRICAL DRAWINGS
S.M.D.	SEE MECHANICAL DRAWINGS
S.P.D.	SEE PLUMBING DRAWINGS
SFRS	SEISMIC FORCE RESISTING SYSTEM
S.J.	SEISMIC JOINT
S.M.S.	SHEET METAL SCREW
SHT.	SHEET(S)
SIM.	SIMILAR
S.B.	SOLID BLOCKING
SPEC'S.	SPECIFICATIONS
SQ.	SQUARE
STAGG'D.	STAGGERED
STD.	STANDARD
STL.	STEEL
STIFF.	STIFFENER
SYMM.	SYMMETRICAL
T.B.	TIE BEAM
T&G	TONGUE AND GROOVE
T&B	TOP AND BOTTOM
T.O.C.	TOP OF CONCRETE
T.F.F.	TOP OF FINISHED FLOOR
T.O.S.	TOP OF STEEL
TYP.	TYPICAL
U.A.	UNDERCUT ANCHOR
U.O.N.	UNLESS OTHERWISE NOTED
V.I.F.	VERIFY IN FIELD
(V) or VERT.	VERTICAL
W.H.S.	WELDED HEADED STUD
W.T.S.	WELDED THREADED STUD
W.W.F.	WELDED WIRE FABRIC
W/	WITH
W/O	WITHOUT
W.S.	WOOD SCREW
W.P.	WORK POINT

els architecture+ urban design
2040 Addison St, Berkeley, CA 94704
510.549.2929 | elsarch.com

PROJECT:

PIEDMONT COMMUNITY POOL

777 MAGNOLIA AVENUE PIEDMONT, CA 94611

PROJECT NUMBER:
21-103

CLIENT:
Owner

PROJECT TEAM:

ARCHITECT:
ELS ARCHITECTURE AND URBAN DESIGN
2040 Addison Street
Berkeley, CA 94704
P: 510.549.2929

CIVIL ENGINEER:
BKF ENGINEERS
4670 Willow Road, Suite 250
Pleasanton, CA 94588
P: 925.396.7700

LANDSCAPE ARCHITECT:
SWA
2200 Bridgeway
Sausalito, CA 94965
P: 415.332.5100

STRUCTURAL ENGINEER:
FORELL/ELSESSER
160 Pine Street, Suite 600
San Francisco, CA 94111
P: 415.837.0700

MEP / FIRE / TELECOM / SECURITY:
GUTTMANN & BLAEVOET
2351 Powell Street
San Francisco, CA 94133
P: 415.655.4000

AQUATICS:
AQUATIC DESIGN GROUP
2226 Faraday Avenue
Carlsbad, CA 92008
P: 760.438.8400

SPECIFICATIONS:
TOPFLIGHT SPECS
49 Geary Street, Suite 230
San Francisco, CA 94108-5748
P: 415.546.6033

REVISION

NUMBER	DATE	DESCRIPTION
	4/15/2022	25% Progress Set

ISSUE:
100% DESIGN DEVELOPMENT

DATE:
APRIL 30, 2022

STAMP:

NOT FOR CONSTRUCTION

SHEET TITLE:
ABBREVIATIONS, SYMBOLS, & SHEET LIST

SHEET NUMBER:
S0.0.4

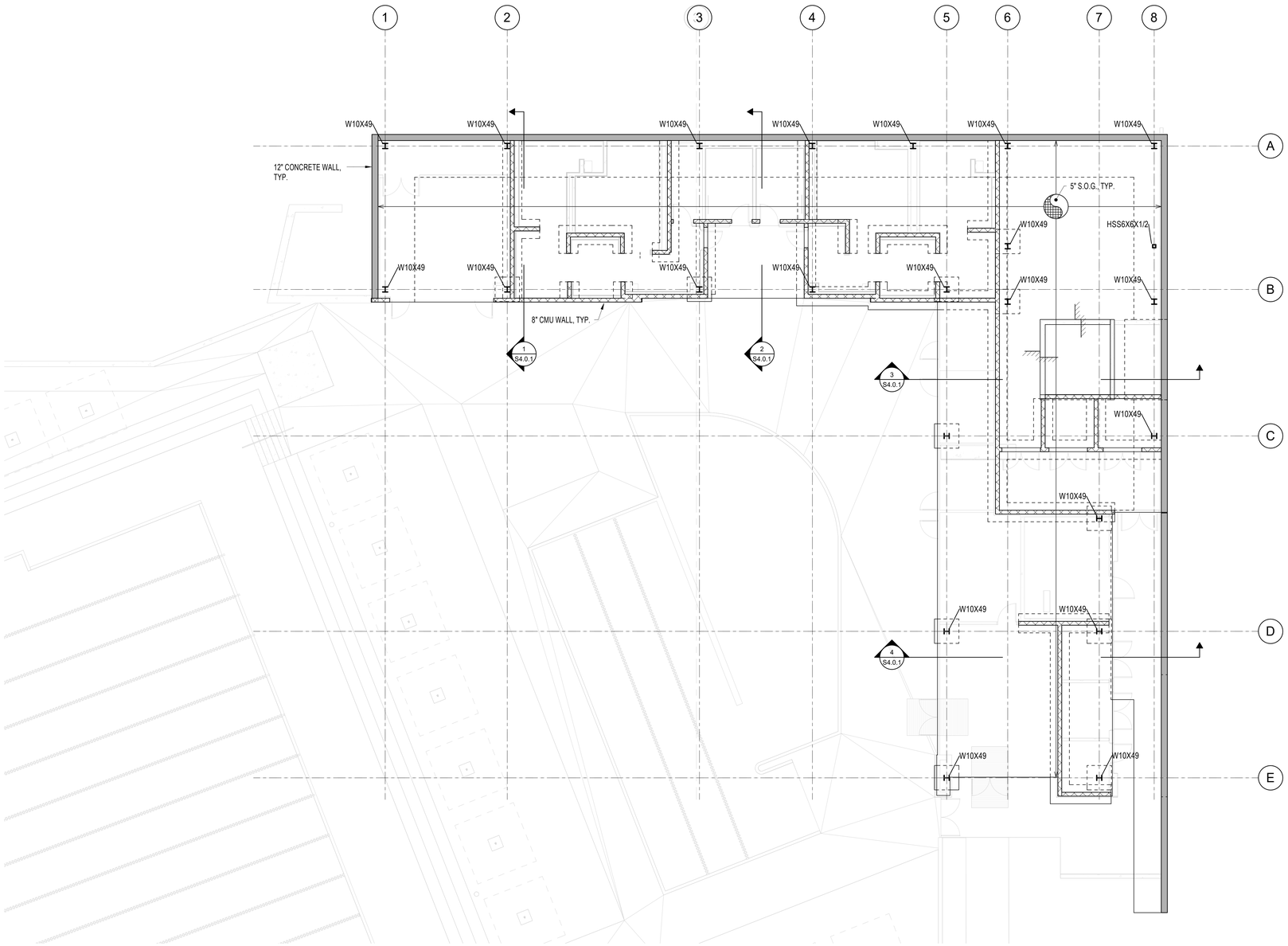

LEVEL 1 AND FOUNDATION PLAN

1/8" = 1'-0" (1 / S2.0.0)

els architecture+ urban design
2040 Addison St, Berkeley, CA 94704
510.549.2929 | elsarch.com

PROJECT:

PIEDMONT COMMUNITY POOL

777 MAGNOLIA AVENUE PIEDMONT, CA 94611

PROJECT NUMBER:
21-103

CLIENT:
Owner

PROJECT TEAM:

ARCHITECT:
ELS ARCHITECTURE AND URBAN DESIGN
2040 Addison Street
Berkeley, CA 94704
P: 510.549.2929

CIVIL ENGINEER:
BKF ENGINEERS
4670 Willow Road, Suite 250
Pleasanton, CA 94588
P: 925.396.7700

LANDSCAPE ARCHITECT:
SWA
2200 Bridgeway
Sausalito, CA 94965
P: 415.332.5100

STRUCTURAL ENGINEER:
FORELL/ELSESSER
160 Pine Street, Suite 600
San Francisco, CA 94111
P: 415.837.0700

MEP / FIRE / TELECOM / SECURITY:
GUTTMANN & BLAEVOET
2351 Powell Street
San Francisco, CA 94133
P: 415.655.4000

AQUATICS:
AQUATIC DESIGN GROUP
2226 Faraday Avenue
Carlsbad, CA 92008
P: 760.438.8400

SPECIFICATIONS:
TOPFLIGHT SPECS
49 Geary Street, Suite 230
San Francisco, CA 94108-5748
P: 415.546.6033

REVISION

NUMBER	DATE	DESCRIPTION
	4/15/2022	25% Progress Set

ISSUE:
100% DESIGN DEVELOPMENT

DATE:
APRIL 30, 2022

STAMP:

NOT FOR CONSTRUCTION

SHEET TITLE:
LEVEL 1 AND FOUNDATION PLAN

SHEET NUMBER:
S2.0.0

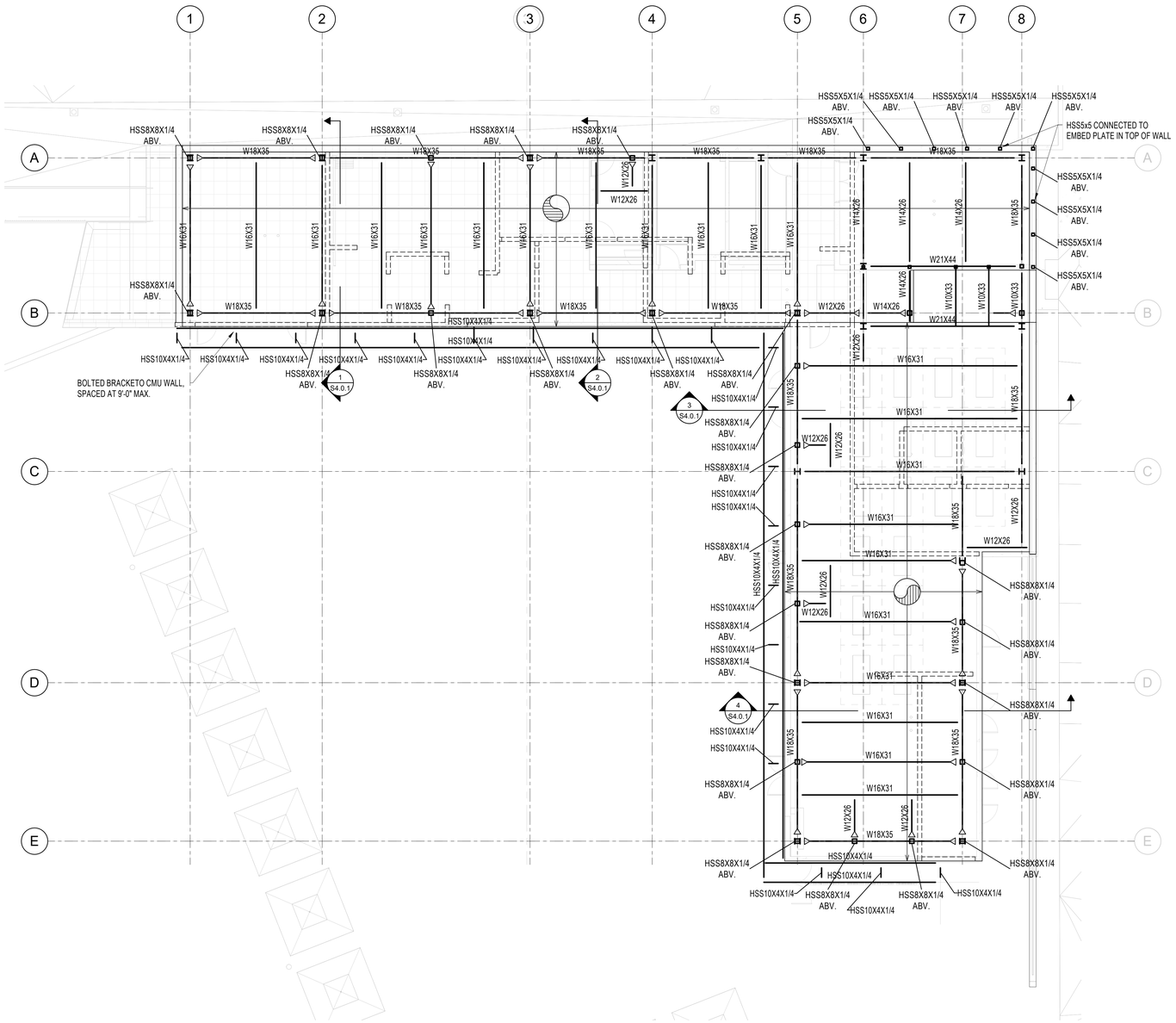

ROOF LEVEL

1/8" = 1'-0" (1 / S2.0.1)

els architecture+ urban design
2040 Addison St, Berkeley, CA 94704
510.549.2929 | elsarch.com

PROJECT:

PIEDMONT COMMUNITY POOL

777 MAGNOLIA AVENUE PIEDMONT, CA 94611

PROJECT NUMBER:
21-103

CLIENT:
Owner

PROJECT TEAM:

ARCHITECT:
ELS ARCHITECTURE AND URBAN DESIGN
2040 Addison Street
Berkeley, CA 94704
P: 510.549.2929

CIVIL ENGINEER:
BKF ENGINEERS
4670 Willow Road, Suite 250
Pleasanton, CA 94588
P: 925.396.7700

LANDSCAPE ARCHITECT:
SWA
2200 Bridgeway
Sausalito, CA 94965
P: 415.332.5100

STRUCTURAL ENGINEER:
FORELL/ELSESSER
160 Pine Street, Suite 600
San Francisco, CA 94111
P: 415.837.0700

MEP / FIRE / TELECOM / SECURITY:
GUTTMANN & BLAEVOET
2351 Powell Street
San Francisco, CA 94133
P: 415.655.4000

AQUATICS:
AQUATIC DESIGN GROUP
2226 Faraday Avenue
Carlsbad, CA 92008
P: 760.438.8400

SPECIFICATIONS:
TOPFLIGHT SPECS
49 Geary Street, Suite 230
San Francisco, CA 94108-5748
P: 415.546.6033

REVISION

NUMBER	DATE	DESCRIPTION
	4/15/2022	25% Progress Set

ISSUE:
100% DESIGN DEVELOPMENT

DATE:
APRIL 30, 2022

STAMP:

NOT FOR CONSTRUCTION

SHEET TITLE:
ROOF LEVEL FRAMING PLAN

SHEET NUMBER:
S2.0.1

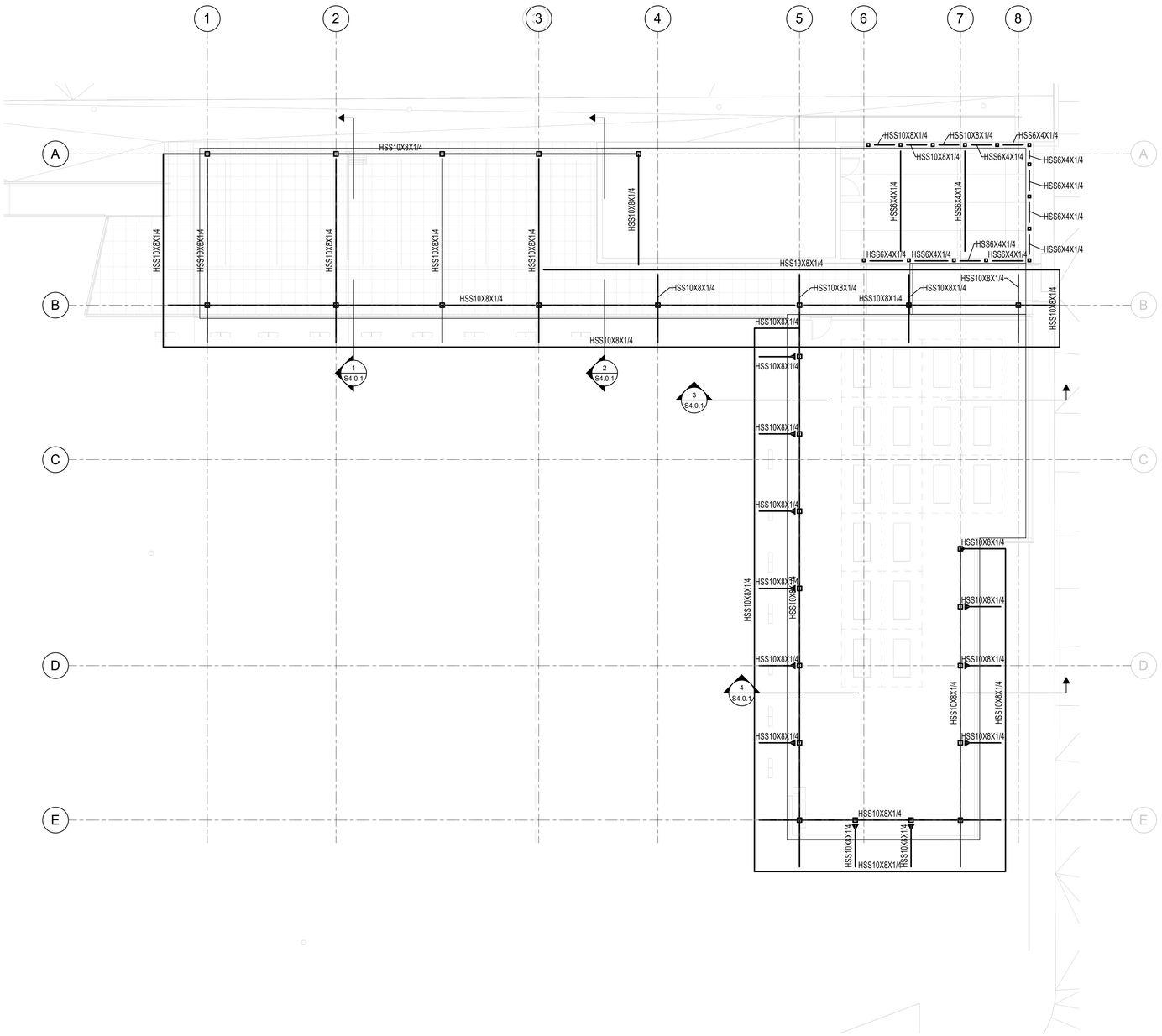

HIGH ROOF LEVEL

1/8" = 1'-0" (1 / S2.0.2)

els architecture+ urban design
2040 Addison St, Berkeley, CA 94704
510.549.2929 | elsarch.com

PROJECT:

PIEDMONT COMMUNITY POOL

777 MAGNOLIA AVENUE PIEDMONT, CA 94611

PROJECT NUMBER:
21-103

CLIENT:
Owner

PROJECT TEAM:

ARCHITECT:
ELS ARCHITECTURE AND URBAN DESIGN
2040 Addison Street
Berkeley, CA 94704
P: 510.549.2929

CIVIL ENGINEER:
BKF ENGINEERS
4670 Willow Road, Suite 250
Pleasanton, CA 94588
P: 925.396.7700

LANDSCAPE ARCHITECT:
SWA
2200 Bridgeway
Sausalito, CA 94965
P: 415.332.5100

STRUCTURAL ENGINEER:
FORELL/ELSESSER
160 Pine Street, Suite 600
San Francisco, CA 94111
P: 415.837.0700

MEP / FIRE / TELECOM / SECURITY:
GUTTMANN & BLAEVOET
2351 Powell Street
San Francisco, CA 94133
P: 415.655.4000

AQUATICS:
AQUATIC DESIGN GROUP
2226 Faraday Avenue
Carlsbad, CA 92008
P: 760.438.8400

SPECIFICATIONS:
TOPFLIGHT SPECS
49 Geary Street, Suite 230
San Francisco, CA 94108-5748
P: 415.546.6033

REVISION

NUMBER	DATE	DESCRIPTION
	4/15/2022	25% Progress Set

ISSUE:
100% DESIGN DEVELOPMENT

DATE:
APRIL 30, 2022

STAMP:

NOT FOR CONSTRUCTION

SHEET TITLE:
HIGH ROOF LEVEL FRAMING PLAN

SHEET NUMBER:
S2.0.2

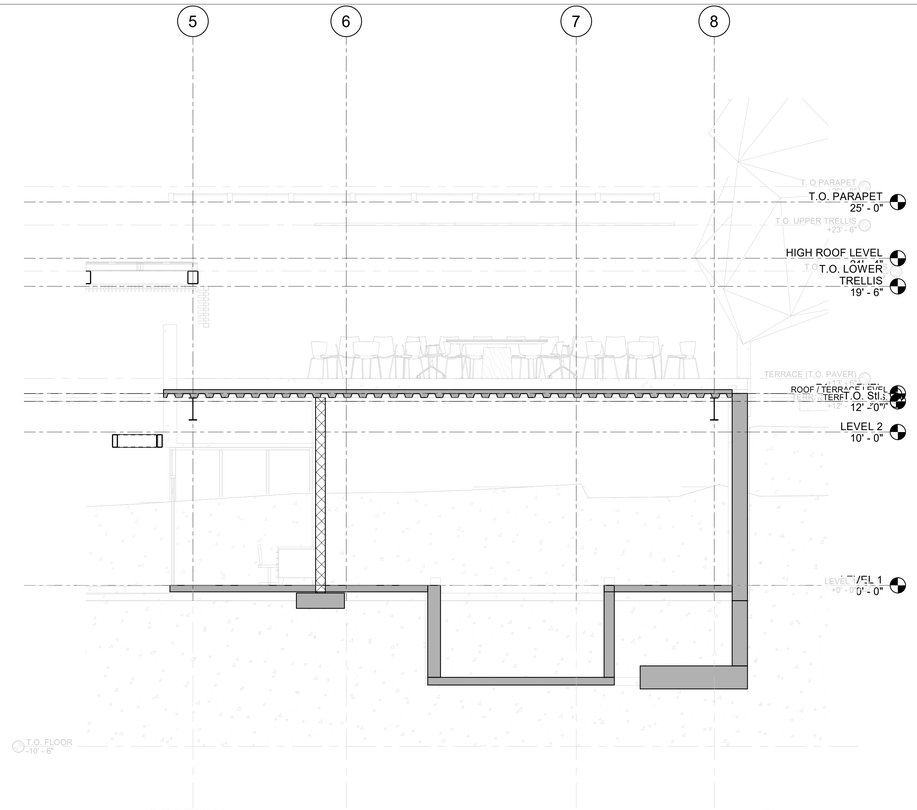

SECTION 3 S4.0.1
1/4" = 1'-0"

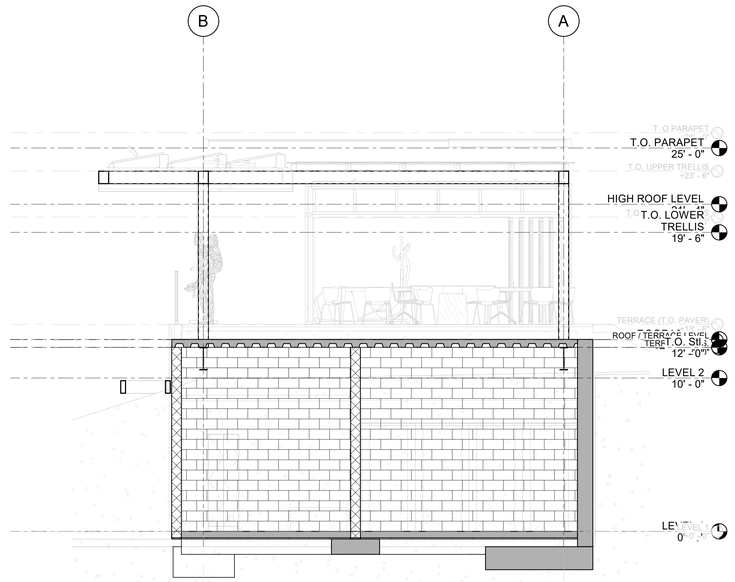

SECTION 1 S4.0.1
1/4" = 1'-0"

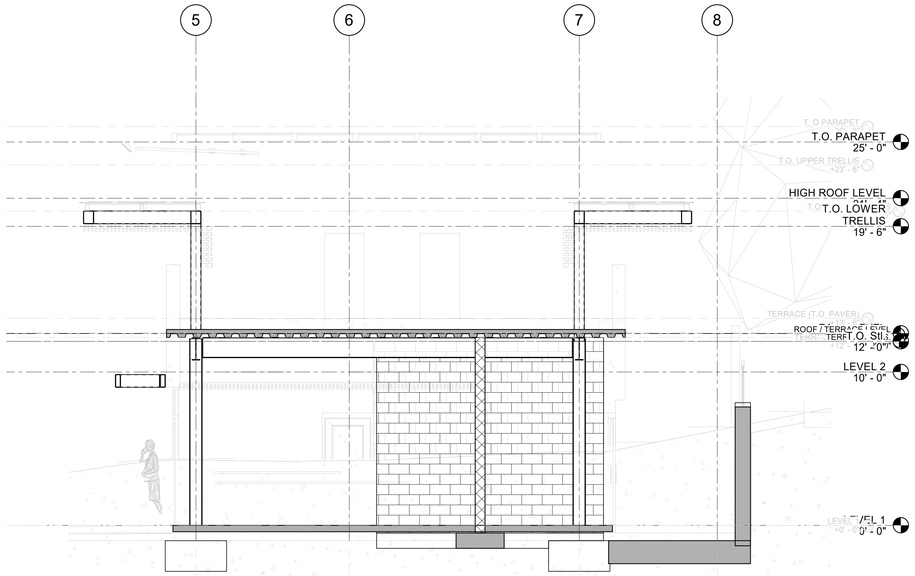

SECTION 4 S4.0.1
1/4" = 1'-0"

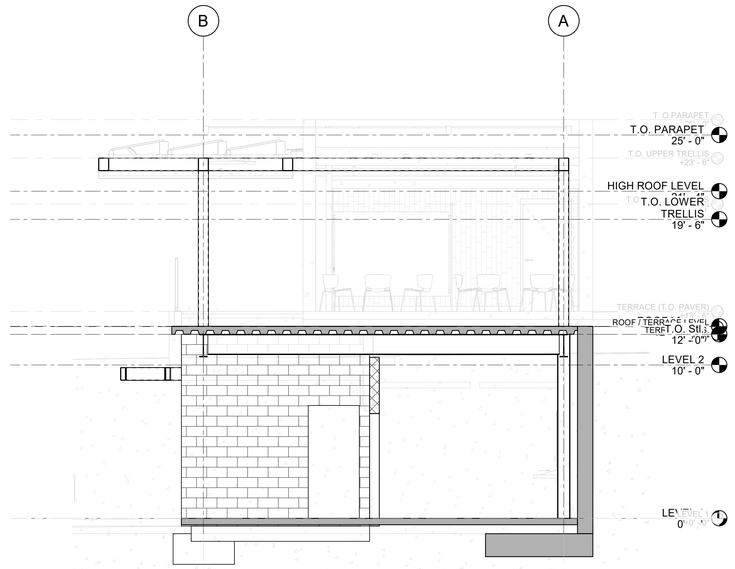

SECTION 2 S4.0.1
1/4" = 1'-0"

els architecture+ urban design
2040 Addison St, Berkeley, CA 94704
510.549.2929 | elsarch.com

PROJECT:

PIEDMONT COMMUNITY POOL

777 MAGNOLIA AVENUE PIEDMONT, CA 94611

PROJECT NUMBER:
21-103

CLIENT:
Owner

PROJECT TEAM:

ARCHITECT:
ELS ARCHITECTURE AND URBAN DESIGN
2040 Addison Street
Berkeley, CA 94704
P: 510.549.2929

CIVIL ENGINEER:
BKF ENGINEERS
4670 Willow Road, Suite 250
Pleasanton, CA 94588
P: 925.396.7700

LANDSCAPE ARCHITECT:
SWA
2200 Bridgeway
Sausalito, CA 94965
P: 415.332.5100

STRUCTURAL ENGINEER:
FORELL/ELSESSER
160 Pine Street, Suite 600
San Francisco, CA 94111
P: 415.837.0700

MEP / FIRE / TELECOM / SECURITY:
GUTTMANN & BLAEVOET
2351 Powell Street
San Francisco, CA 94133
P: 415.655.4000

AQUATICS:
AQUATIC DESIGN GROUP
2226 Faraday Avenue
Carlsbad, CA 92008
P: 760.438.8400

SPECIFICATIONS:
TOPFLIGHT SPECS
49 Geary Street, Suite 230
San Francisco, CA 94108-5748
P: 415.546.6033

REVISION

NUMBER	DATE	DESCRIPTION
	4/15/2022	25% Progress Set

ISSUE:
100% DESIGN DEVELOPMENT

DATE:
APRIL 30, 2022

STAMP:
NOT FOR CONSTRUCTION

SHEET TITLE:
SECTIONS

SHEET NUMBER:
S4.0.1

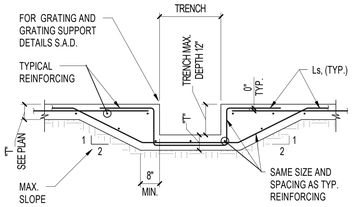

FOR TRENCH LOCATIONS AND SIZE, SEE PLANS AND/OR APPLICABLE ARCH., MECH. AND ELECTRICAL DRAWINGS.

TYPICAL TRENCH AT SLAB ON GRADE (17 / S5.0.1)

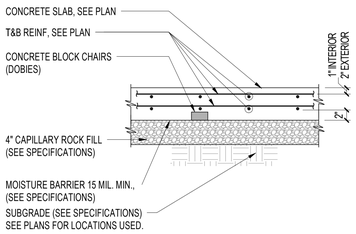

TYPICAL SLAB ON GRADE - DOUBLE MAT (13 / S5.0.1)

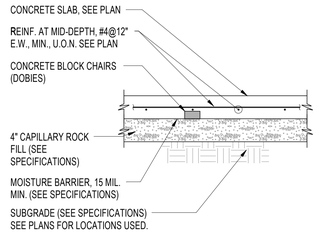

TYPICAL SLAB ON GRADE (9 / S5.0.1)

CONCRETE		3,000 PSI CONC.			4,000 PSI CONC.			5,000 PSI CONC.		
BAR SIZE	POSITION	L_{dh}	L_d	L_s	L_{dh}	L_d	L_s	L_{dh}	L_d	L_s
4	TOP (NOTE 4)	11"	29" / 22"	38" / 29"	10"	25" / 19"	33" / 25"	9"	23" / 17"	30" / 23"
	OTHER									
5	TOP	14"	37" / 28"	49" / 37"	12"	32" / 24"	42" / 32"	11"	29" / 22"	38" / 29"
	OTHER									
6	TOP	17"	43" / 33"	56" / 43"	15"	38" / 29"	50" / 38"	13"	34" / 26"	45" / 34"
	OTHER									
7	TOP	20"	63" / 48"	82" / 63"	17"	55" / 42"	72" / 55"	15"	50" / 38"	65" / 50"
	OTHER									
8	TOP	22"	72" / 55"	94" / 72"	19"	63" / 48"	82" / 63"	17"	56" / 43"	73" / 56"
	OTHER									
9	TOP	25"	81" / 62"	106" / 81"	22"	71" / 54"	93" / 71"	19"	63" / 48"	82" / 63"
	OTHER									
10	TOP	28"	91" / 70"	*	24"	79" / 61"	*	22"	71" / 54"	*
	OTHER									
11	TOP	31"	101" / 78"	*	27"	87" / 67"	*	24"	78" / 60"	*
	OTHER									
14	TOP	38"	125" / 96"	*	33"	110" / 84"	*	29"	98" / 75"	*
	OTHER									

* SEE NOTE 5

NOTES:

1. DEVELOPMENT LENGTH, (Ld) WHERE REQUIRED IN DRAWINGS AND FOR SPLICE CALCULATION SHALL BE CALCULATED PER ACI 318R.
2. CLASS "B" SPLICES (Ls) SHALL BE USED TYPICALLY, U.O.N. ON DRAWINGS.
3. ALL WALL HORIZ. REINF. ARE TOP BARS.
4. ALL BARS ARE TOP BARS UNLESS DIMENSION "A" IS LESS THAN 12".
5. USE MECHANICAL COUPLERS TO SPLICE BAR SIZES NO. 10 AND GREATER. MECHANICAL COUPLERS OPTIONAL FOR NO. 7-NO. 9 BARS.
6. FOR #3 TO #11 BAR:: MULTIPLY Ldh BY 0.7 WHERE MORE THAN 2" COVER IS MAINTAINED, BUT THE LENGTH MUST NOT BE LESS THAN 8bd OR 6".
7. MULTIPLY TABULATED VALUES BY 1.3 FOR LIGHTWEIGHT CONCRETE.
8. ALL ADJACENT LAP SPLICES SHALL BE STAGGERED THE GREATER OF 3'-0" OR Ls WHERE THE DISTANCE IS MEASURED FROM CENTER-TO CENTER OF Ls U.O.N.
9. THIS TABLE APPLIES FOR GRADE 60 REBAR.

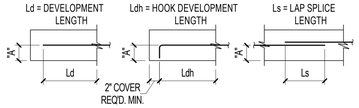

TYPICAL REINFORCING BAR LAP LENGTH SCHEDULE AND NOTES (1 / S5.0.1)

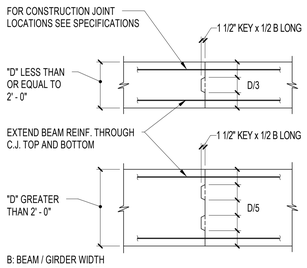

TYPICAL BEAM, GIRDER & GRADE BEAM CONSTRUCTION JOINTS (22 / S5.0.1)

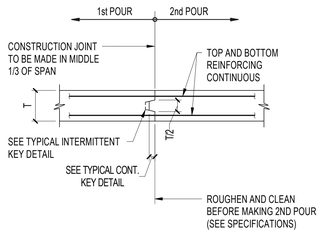

TYPICAL SUSPENDED SLAB CONSTRUCTION JOINT (18 / S5.0.1)

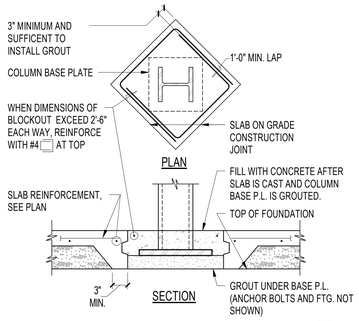

SLAB ON GRADE BLOCKOUT AT STEEL COLUMN (14 / S5.0.1)

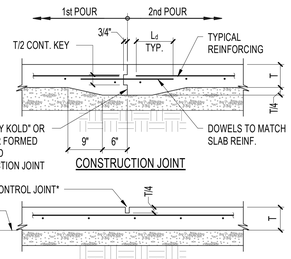

* SAWING MUST OCCUR AS SOON AS CONCRETE SURFACE IS FIRM ENOUGH SO CONCRETE WILL NOT BE DAMAGED, BUT NOT LATER THAN 12 HOURS AFTER CONCRETE HAS BEEN POURED.

CONTROL JOINT

TYPICAL INTERIOR SLAB ON GRADE JOINTS (10 / S5.0.1)

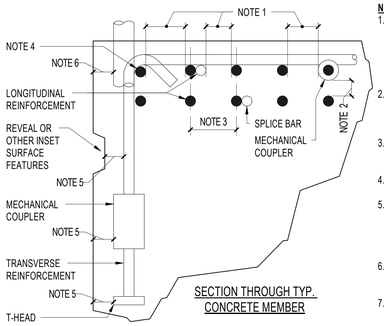

NOTES:

1. CLEAR SPACE BETWEEN ADJACENT REINFORCEMENT SHALL NOT BE LESS THAN 1 OF THE LARGER OF THE BARS, 1" (1 1/2" IN COLUMNS), AND 1 AGGREGATE SIZE. CLEAR SPACE BETWEEN REINFORCEMENT SHALL BE MAINTAINED AT CONTACT LAP SPLICES. MECHANICAL COUPLERS SHALL BE CONSIDERED AS PART OF THE REINFORCEMENT.
2. CLEAR SPACING BETWEEN PARALLEL LAYERS OF REINFORCEMENT INCLUDING LAP SPLICES AND MECHANICAL COUPLERS SHALL BE A MINIMUM OF 1" OR GREATER UNLESS OTHERWISE SHOWN.
3. MAINTAIN VERTICAL ALIGNMENT OF LAYERED PARALLEL REINFORCEMENT IN BEAMS AND SLAB.
4. NEST LONGITUDINAL BARS IN TRANSVERSE BAR BENDS AND HOOKS.
5. CONCRETE COVER SHALL BE MEASURED FROM FACE OF CONCRETE INCLUDING REVEALS OR OTHER SURFACE FEATURES TO FACE OF REINFORCEMENT, MECHANICAL COUPLERS, OR HEADED BARS. ADHERE TO THE SCHEDULE IN THE GENERAL NOTES FOR MINIMUM CONCRETE COVERS FOR CAST-IN-PLACE CONCRETE.
6. ADJUST CAGE SIZE WHERE COVER IS CONTROLLED BY REINFORCEMENT BAR OF LARGER SIZE THAN TIE SET REINFORCEMENT.
7. THIS CONDITION INCLUDES CONCRETE CAST AGAINST WATERPROOFING MEMBRANES.

TYPICAL CONCRETE REINFORCEMENT COVER, CLEARANCE AND ALIGNMENT REQUIREMENTS (2 / S5.0.1)

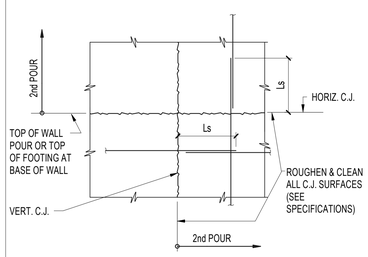

TYPICAL WALL CONSTRUCTION JOINTS REINFORCING DETAIL (23 / S5.0.1)

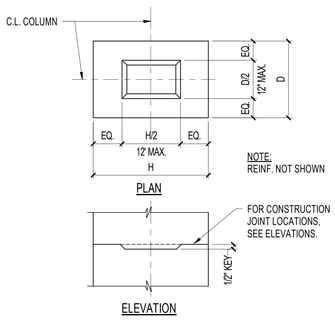

TYPICAL COLUMN CONSTRUCTION JOINT (19 / S5.0.1)

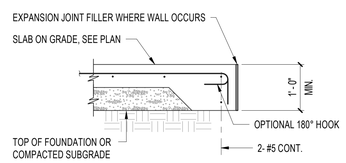

TYPICAL SLAB ON GRADE EDGE (15 / S5.0.1)

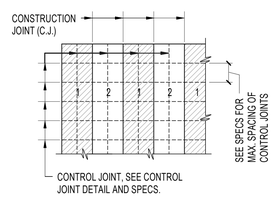

NOTE:
THERE SHALL BE A MINIMUM OF 48 HOURS BETWEEN POURS 1 & 2

TYPICAL SLAB ON GRADE POUR PATTERN (11 / S5.0.1)

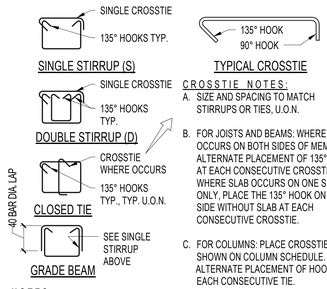

CROSSTIE NOTES:

A. SIZE AND SPACING TO MATCH STIRRUPS OR TIES, U.O.N.

B. FOR JOISTS AND BEAMS: WHERE SLAB OCCURS ON BOTH SIDES OF MEMBER, ALTERNATE PLACEMENT OF 135° HOOK AT EACH CONSECUTIVE CROSSTIE. WHERE SLAB OCCURS ON ONE SIDE ONLY, PLACE THE 135° HOOK ON THE SIDE WITHOUT SLAB AT EACH CONSECUTIVE CROSSTIE.

C. FOR COLUMNS: PLACE CROSSTIES AS SHOWN ON COLUMN SCHEDULE. ALTERNATE PLACEMENT OF HOOK FOR EACH CONSECUTIVE TIE.

NOTES:

1. FOR SIZE & SPACING OF STIRRUPS SEE CONCRETE DETAILS.
2. FOR TYPICAL BAR HOOKS & BENDS, SEE "TYPICAL BAR HOOKS AND BENDS" DETAIL.

TYPICAL STIRRUPS AND TIES (7 / S5.0.1)

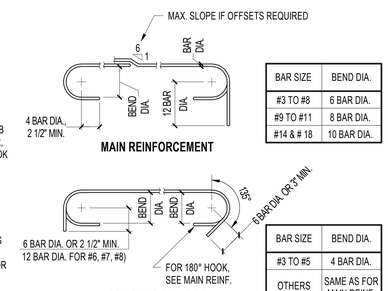

BAR SIZE	BEND DIA.
#3 TO #8	6 BAR DIA.
#9 TO #11	8 BAR DIA.
#14 & # 18	10 BAR DIA.

BAR SIZE	BEND DIA.
#3 TO #5	4 BAR DIA.
OTHERS	SAME AS FOR MAIN REINF.

TYPICAL BAR HOOKS, BENDS AND OFFSET (3 / S5.0.1)

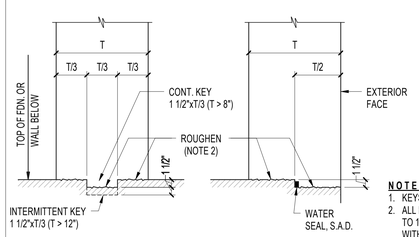

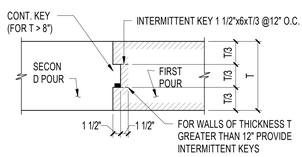

NOTES:

1. KEYS WHERE REQUIRED SHALL BE FORMED NOT STAMPED (SEE SPECS.).
2. ALL HORIZONTAL JOINTS: FOLLOWING CURE OF LIFT BELOW, SAND BLAST TO 1/4" AMPLITUDE, OR APPLY RETARDER DURING POUR AND CLEAN JOINT WITH AIR AND WATER.
3. PROVIDE CONTINUOUS KEYS FOR WALLS GREATER THAN 8" THICK. PROVIDE CONTINUOUS & INTERMITTENT KEYS FOR WALLS GREATER THAN 12" THICK.
4. WHERE APPROVED BY THE ENGINEER, INTERMITTENT KEYS MAY BE REPLACED BY ROUGHENING TO UNIFORM EXPOSE LARGE AGGREGATE OVER THE ENTIRE JOINT SURFACE.

TYPICAL CONSTRUCTION JOINTS AT CONCRETE WALLS (20 / S5.0.1)

1" = 1'-0"

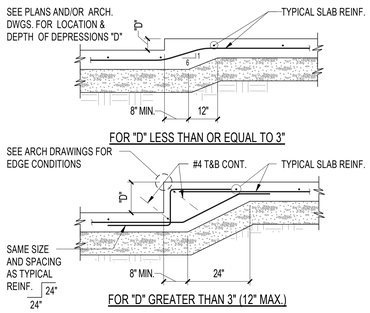

TYPICAL DEPRESSED SLAB ON GRADE DETAILS (16 / S5.0.1)

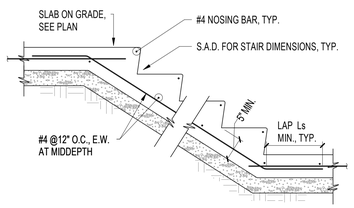

TYPICAL CONCRETE STAIR ON GRADE (12 / S5.0.1)

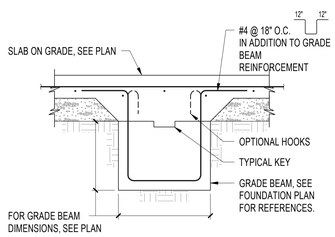

TYPICAL SLAB ON GRADE AT GRADE BEAM (8 / S5.0.1)

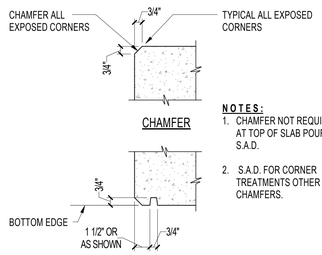

NOTES:

1. CHAMFER NOT REQUIRED AT TOP OF SLAB POURS, S.A.D.
2. S.A.D. FOR CORNER TREATMENTS OTHER THAN CHAMFERS.

TYPICAL CONCRETE EDGE DETAILS (4 / S5.0.1)

els architecture+ urban design
2040 Addison St, Berkeley, CA 94704
510.549.2929 | elsarch.com

PROJECT:

PIEDMONT COMMUNITY POOL

777 MAGNOLIA AVENUE PIEDMONT, CA 94611

PROJECT NUMBER:
21-103

CLIENT:
Owner

PROJECT TEAM:

ARCHITECT:
ELS ARCHITECTURE AND URBAN DESIGN
2040 Addison Street
Berkeley, CA 94704
P: 510.549.2929

CIVIL ENGINEER:
BKF ENGINEERS
4670 Willow Road, Suite 250
Pleasanton, CA 94588
P: 925.396.7700

LANDSCAPE ARCHITECT:
SWA
2200 Bridgeway
Sausalito, CA 94965
P: 415.332.5100

STRUCTURAL ENGINEER:
FORELL/ELSESSER
160 Pine Street, Suite 600
San Francisco, CA 94111
P: 415.837.0700

MEP / FIRE / TELECOM / SECURITY:
GUTTMANN & BLAEVOET
2351 Powell Street
San Francisco, CA 94133
P: 415.655.4000

AQUATICS:
AQUATIC DESIGN GROUP
2226 Faraday Avenue
Carlsbad, CA 92008
P: 760.438.8400

SPECIFICATIONS:
TOPFLIGHT SPECS
49 Geary Street, Suite 230
San Francisco, CA 94108-5748
P: 415.546.6033

REVISION

NUMBER	DATE	DESCRIPTION
	4/15/2022	25% Progress Set

ISSUE:
100% DESIGN DEVELOPMENT

DATE:
APRIL 30, 2022

STAMP:

NOT FOR CONSTRUCTION

SHEET TITLE:
TYPICAL CONCRETE DETAILS

SHEET NUMBER:
S5.0.1

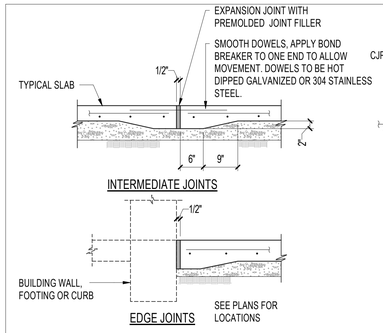

TYPICAL EXTERIOR PAVING SLAB ON GRADE EXPANSION JOINTS (21 / S5.0.2)

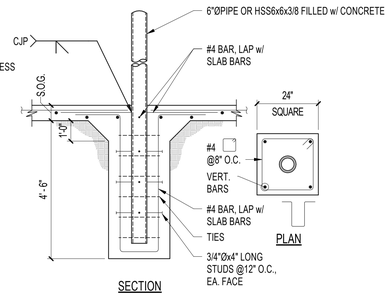

TYPICAL CONSTRAINED BOLLARD (17 / S5.0.2) 1" = 1'-0"

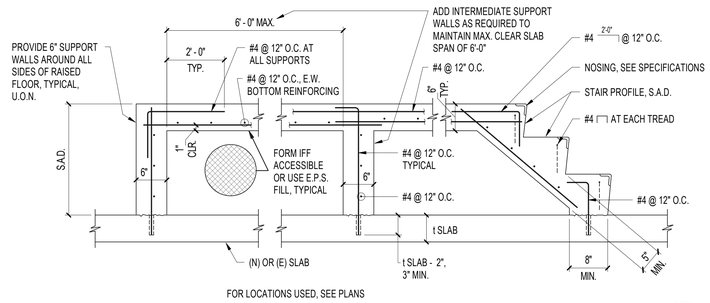

FOR LOCATIONS USED, SEE PLANS

TYPICAL RAISED FLOOR AND/OR MISCELLANEOUS CONCRETE STEPS (9 / S5.0.2)

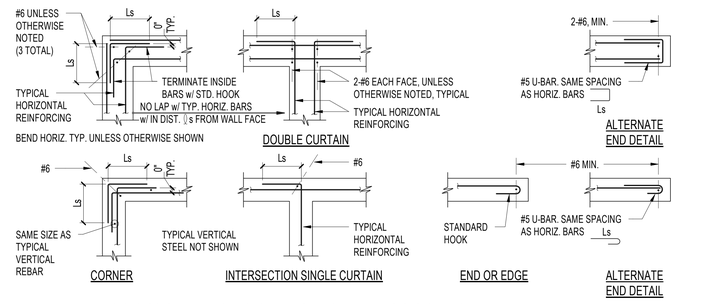

BAR INTERSECTIONS SHOWN APPLY TO ALL SINGLE AND DOUBLE CURTAIN INTERSECTIONS AND TO ALL VARIATIONS OF VERTICAL AND HORIZONTAL REBAR POSITIONS

TYPICAL PLAN VIEWS OF CONCRETE WALLS AND FOOTINGS (1 / S5.0.2) 1" = 1'-0"

USER NOTE:
DRAW STANDARD 90 DEG AND 180 DEG HOOKS TO SCALE. THEY MAY NOT FIT IN THE WALL. MAKE U-BAR LARGER IF REQUIRED, I.E. BARS NEED TO BE DEVELOPED WITHIN Ld OF END OF WALL.

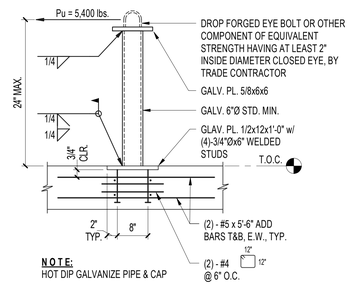

TYPICAL FALL PROTECTION REINF. AT CONCRETE SLAB (18 / S5.0.2) 1" = 1'-0"

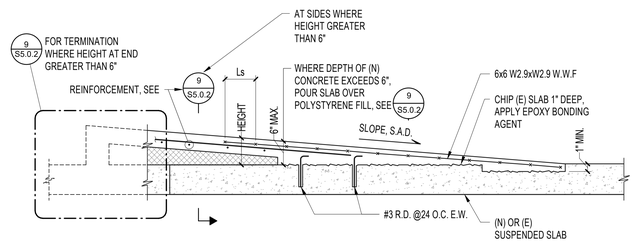

FOR LOCATIONS USED, SEE FRAMING PLANS

TYPICAL SLOPED CONCRETE FILL AT INTERIOR RAMP TRANSITIONS (10 / S5.0.2)

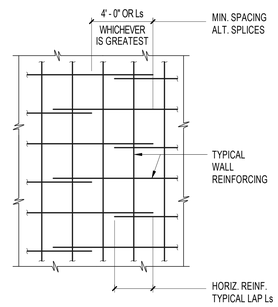

TYPICAL WALL REINFORCING (6 / S5.0.2) 1" = 1'-0"

MINIMUM CONCRETE WALL REINFORCING		
WALL THICKNESS	BARS EACH WAY	POSITION
6"	#4 AT 12" o.c.	SINGLE CURTAIN
7"	#4 AT 10" o.c.	SINGLE CURTAIN
8"	#4 AT 10" o.c.	SINGLE CURTAIN
8"	#4 AT 18" o.c.	DOUBLE CURTAIN
9"	#4 AT 16" o.c.	DOUBLE CURTAIN
10"	#4 AT 16" o.c.	DOUBLE CURTAIN
12"	#4 AT 12" o.c.	DOUBLE CURTAIN
14"	#4 AT 10" o.c.	DOUBLE CURTAIN

ABOVE REINFORCING SHALL APPLY UNLESS OTHERWISE NOTED.

MINIMUM CONCRETE WALL REINFORCING (2 / S5.0.2) 1" = 1'-0"

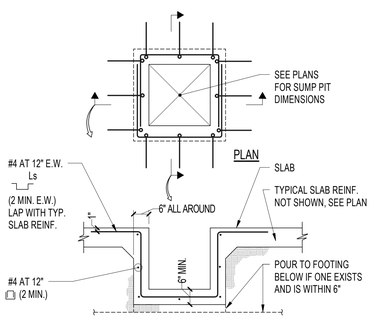

TYPICAL SUMP PIT DETAIL (19 / S5.0.2) 1" = 1'-0"

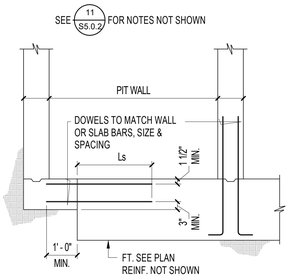

TYPICAL ELEVATOR PIT SECTION AT FOOTING (15 / S5.0.2)

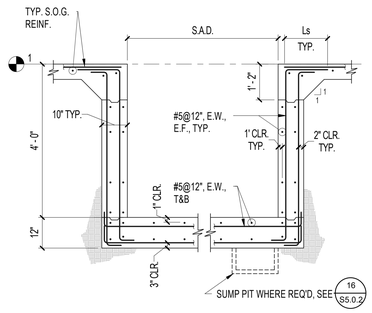

ELEVATOR PIT SECTION (11 / S5.0.2)

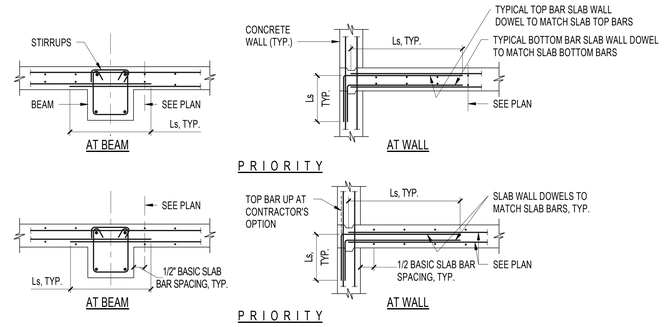

TYP. SLAB DETAILS AT WALLS/BEAMS (3 / S5.0.2) 1" = 1'-0"

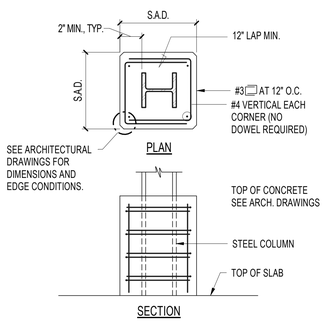

TYP. NON-STRUCTURAL CONC. ENCASEMENT OF STEEL COLUMN (20 / S5.0.2)

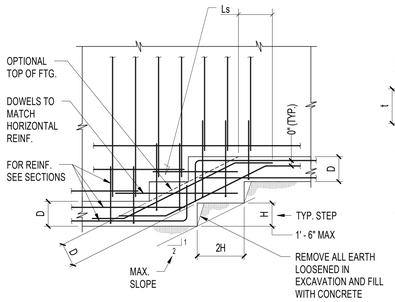

TYPICAL STEPPED WALL FOOTINGS (LARGE FOOTINGS) (16 / S5.0.2)

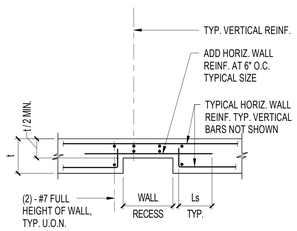

AT RECESS GREATER THAN 1/3 WALL THICKNESS PROVIDE TYPICAL OPENING REINFORCEMENT.

TYPICAL WALL RECESS DETAIL (5 / S5.0.2)

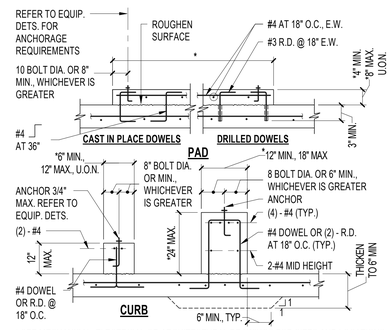

* SEE MECHANICAL, ELECTRICAL OR ARCHITECTURAL DRAWINGS FOR SIZES AND LOCATIONS. (NOTE: COORDINATE HEIGHT OF PAD OR CURB WITH ANCHOR BOLT EMBEDMENT REQUIREMENTS.)

TYPICAL CONCRETE EQUIPMENT SUPPORTS (4 / S5.0.2) 1" = 1'-0"

els architecture+ urban design
2040 Addison St, Berkeley, CA 94704
510.549.2929 | elsarch.com

PROJECT:

PIEDMONT COMMUNITY POOL

777 MAGNOLIA AVENUE PIEDMONT, CA 94611

PROJECT NUMBER: 21-103

CLIENT: Owner

PROJECT TEAM:

ARCHITECT:
ELS ARCHITECTURE AND URBAN DESIGN
2040 Addison Street
Berkeley, CA 94704
P: 510.549.2929

CIVIL ENGINEER:
BKF ENGINEERS
4670 Willow Road, Suite 250
Pleasanton, CA 94588
P: 925.396.7700

LANDSCAPE ARCHITECT:
SWA
2200 Bridgeway
Sausalito, CA 94965
P: 415.332.5100

STRUCTURAL ENGINEER:
FORELL/ELSESSER
160 Pine Street, Suite 600
San Francisco, CA 94111
P: 415.837.0700

MEP / FIRE / TELECOM / SECURITY:
GUTTMANN & BLAEVOET
2351 Powell Street
San Francisco, CA 94133
P: 415.655.4000

AQUATICS:
AQUATIC DESIGN GROUP
2226 Faraday Avenue
Carlsbad, CA 92008
P: 760.438.8400

SPECIFICATIONS:
TOPFLIGHT SPECS
49 Geary Street, Suite 230
San Francisco, CA 94108-5748
P: 415.546.6033

REVISION

NUMBER	DATE	DESCRIPTION
	4/15/2022	25% Progress Set

ISSUE: **100% DESIGN DEVELOPMENT**

DATE: **APRIL 30, 2022**

STAMP:

NOT FOR CONSTRUCTION

SHEET TITLE: **TYPICAL CONCRETE DETAILS**

SHEET NUMBER: **S5.0.2**

PILE CAP SCHEDULE								
				LONGITUDINAL REINFORCING		TRANSVERSE REINFORCING		
MARK	W	L	DEPTH	TOP	BOTTOM	TOP	BOTTOM	REMARKS

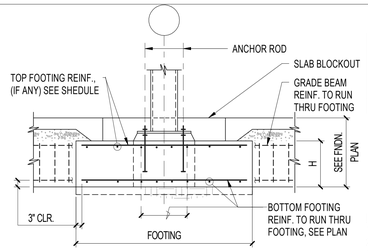

RECTANGULAR FOOTING SCHEDULE						
MARK	B	L	H	BOTT. REINF. EA. WAY	TOP REINF. EA. WAY	REMARKS
F1	4' - 0"	4' - 0"	2' - 0"			

NOTES:
1. SEE FOUNDATION PLANS FOR FOOTING MARK LOCATIONS.
2. SEE BASE PLATE DETAILS FOR ANCHOR ROD DETAILS.
3. SEE SHEET --- FOR TYPICAL CONCRETE DETAILS AND ADDITIONAL FOUNDATION DETAILS.
4. ALL FOOTINGS AND GRADE BEAMS ARE CENTERED ON GRID LINES UNLESS DIMENSIONED OTHERWISE ON PLAN DETAILS.

TYPICAL COLUMN RECTANGULAR FOOTING WITH GRADE BEAMS

1" = 1'-0" (1 / S5.0.3)

CONCRETE BEAM SCHEDULE																		
			TOP REINF.					SIDES	BOTT. REINF.					STIRRUPS				
MARK	WIDTH B	HEIGHT H	COVER (IN.)	UPPER LAYER	LOWER LAYER	TYP. BARS	ADD BARS	EACH FACE	COVER (IN.)	UPPER LAYER	LOWER LAYER	TYP. BARS	ADD BARS	SIZE	TYPE	SPACING	REMARKS

GRADE BEAM SCHEDULE

2 / S5.0.3

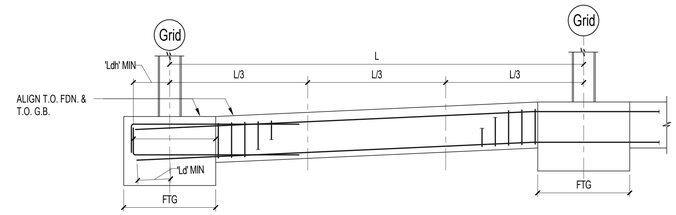

NOTES:
1. SEE DETAIL A FOR INFO NOT SHOWN

DETAIL B: G.B. W/ SLOPING ELEVATION

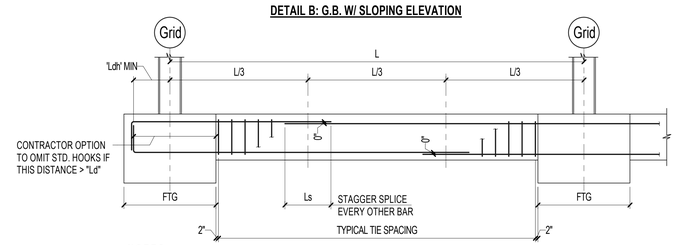

NOTES:
1. MAKE LONGITUDINAL BARS AS LONG AS PRACTICAL, STAGGER LAP SPLICES.
2. LOCATE GRADE BEAM REINFORCING TO CLEAR FTG REINFORCING, ANCHOR BOLTS AND PIPE SLEEVES. SEE STRUCTURAL DETAILS AND PLUMBING DRAWINGS, TYPICAL.

DETAIL A: G.B. W/ CONSTANT ELEVATION

TYPICAL GRADE BEAM ELEVATION

1" = 1'-0" (3 / S5.0.3)

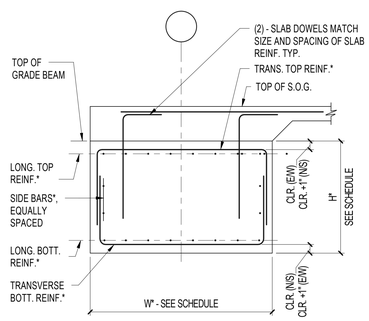

*NOTE: SEE GRADE BEAM SCHEDULE

TYPICAL PERIMETER GRADE BEAM SECTION

1" = 1'-0" (16 / S5.0.3)

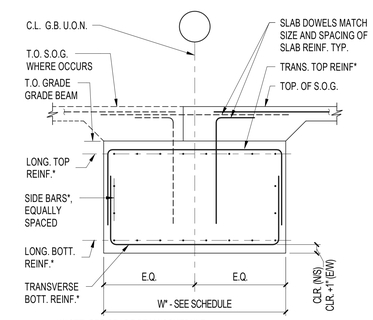

*NOTE: SEE GRADE BEAM SCHEDULE

TYPICAL GRADE BEAM SECTION

1" = 1'-0" (12 / S5.0.3)

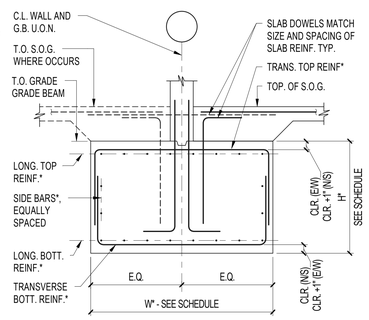

*NOTE: SEE GRADE BEAM SCHEDULE

TYPICAL GRADE BEAM SECTION

1" = 1'-0" (5 / S5.0.3)

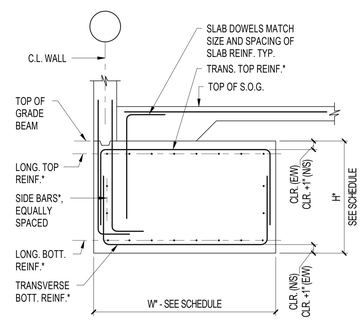

*NOTE: SEE GRADE BEAM SCHEDULE

TYPICAL PERIMETER GRADE BEAM SECTION

1" = 1'-0" (4 / S5.0.3)

els architecture+ urban design
2040 Addison St, Berkeley, CA 94704
510.549.2929 | elsarch.com

PROJECT:

PIEDMONT COMMUNITY POOL

777 MAGNOLIA AVENUE PIEDMONT, CA 94611

PROJECT NUMBER:
21-103

CLIENT:
Owner

PROJECT TEAM:

ARCHITECT:
ELS ARCHITECTURE AND URBAN DESIGN
2040 Addison Street
Berkeley, CA 94704
P: 510.549.2929

CIVIL ENGINEER:
BKF ENGINEERS
4670 Willow Road, Suite 250
Pleasanton, CA 94588
P: 925.396.7700

LANDSCAPE ARCHITECT:
SWA
2200 Bridgeway
Sausalito, CA 94965
P: 415.332.5100

STRUCTURAL ENGINEER:
FORELL/ELSESSER
160 Pine Street, Suite 600
San Francisco, CA 94111
P: 415.837.0700

MEP / FIRE / TELECOM / SECURITY:
GUTTMANN & BLAEVOET
2351 Powell Street
San Francisco, CA 94133
P: 415.655.4000

AQUATICS:
AQUATIC DESIGN GROUP
2226 Faraday Avenue
Carlsbad, CA 92008
P: 760.438.8400

SPECIFICATIONS:
TOPFLIGHT SPECS
49 Geary Street, Suite 230
San Francisco, CA 94108-5748
P: 415.546.6033

REVISION

NUMBER	DATE	DESCRIPTION
	4/15/2022	25% Progress Set

ISSUE:
100% DESIGN DEVELOPMENT

DATE:
APRIL 30, 2022

STAMP:

NOT FOR CONSTRUCTION

SHEET TITLE:
FOUNDATION SCHEDULES & DETAILS

SHEET NUMBER:
S5.0.3

	GEOMETRY							REINFORCING BARS					
MARK	H1, MAX	T, FTG	T, WALL(3)	L1	L2	B, KEY	D, KEY	A	B	C	D	E	F
A	12'	22"	14"	10'	0'	14'	3'-6"	#7@12	#5@12	#4@12	#8@12	#5@12	#5@12
B	10'	16"	14"	8'	0'	14'	3'-0"	#6@12	#5@12	#4@12	#6@12	#5@12	#5@12
C	8'	16"	14"	6'	0'	14'	2'-6"	#5@12	#5@12	#4@12	#4@12	#4@12	#4@12
D	6'	16"	14"	4'	0'	14'	1'-6"	#5@12	#5@12	#4@12	#4@12	#4@12	#4@12

NOTES:

1. WALLS DESIGNED TO BE FULLY DRAINED, SEE OTHER DISCIPLINES FOR DRAINAGE REQUIREMENTS. U.O.N. PROVIDE 3" DIAMETER MIN. WEEP HOLES IN WALL LOCATED 1'-6" MAX. FROM TOP OF FOOTING, SPACED AT 15'-0" O.C. MAX.
2. MAXIMUM 100psf UNIFORM SURCHARGE ALLOWED.
3. WALL THICKNESS ASSUMES NO REVEALS IN FACE OF WALL. IF ARCH. REVEALS REQ'D, ADD THE DEPTH OF THE REVEAL TO THE OVERALL WALL THICKNESS.
4. BACKFILL PER SITE SPECIFIC GEOTECHNICAL REPORT.

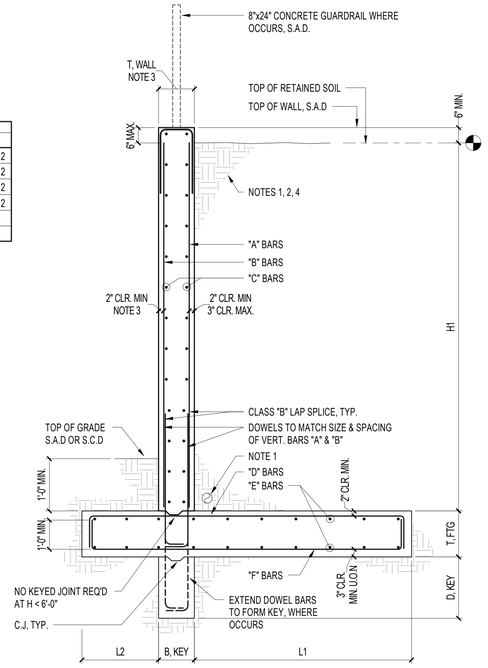

TYP. CANTILEVER RETAINING WALL

1/2" = 1'-0" (1 / S5.1.1)

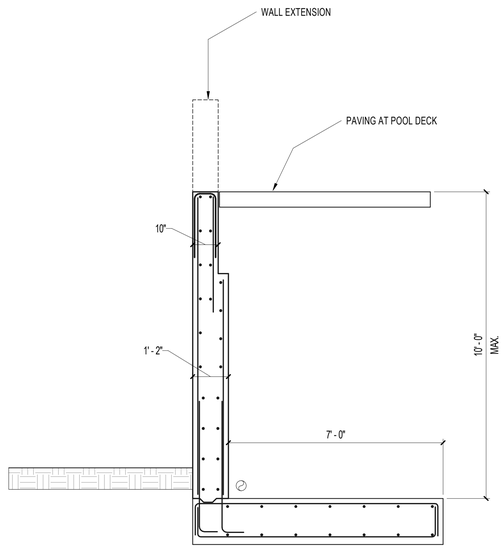

SITE RETAINING WALL

1/2" = 1'-0" (4 / S5.1.1)

els architecture+ urban design
2040 Addison St, Berkeley, CA 94704
510.549.2929 | elsarch.com

PROJECT:

PIEDMONT COMMUNITY POOL

777 MAGNOLIA AVENUE PIEDMONT, CA 94611

PROJECT NUMBER:
21-103

CLIENT:
Owner

PROJECT TEAM:

ARCHITECT:
ELS ARCHITECTURE AND URBAN DESIGN
2040 Addison Street
Berkeley, CA 94704
P: 510.549.2929

CIVIL ENGINEER:
BKF ENGINEERS
4670 Willow Road, Suite 250
Pleasanton, CA 94588
P: 925.396.7700

LANDSCAPE ARCHITECT:
SWA
2200 Bridgeway
Sausalito, CA 94965
P: 415.332.5100

STRUCTURAL ENGINEER:
FORELL/ELSESSER
160 Pine Street, Suite 600
San Francisco, CA 94111
P: 415.837.0700

MEP / FIRE / TELECOM / SECURITY:
GUTTMANN & BLAEVOET
2351 Powell Street
San Francisco, CA 94133
P: 415.655.4000

AQUATICS:
AQUATIC DESIGN GROUP
2226 Faraday Avenue
Carlsbad, CA 92008
P: 760.438.8400

SPECIFICATIONS:
TOPFLIGHT SPECS
49 Geary Street, Suite 230
San Francisco, CA 94108-5748
P: 415.546.6033

REVISION

NUMBER	DATE	DESCRIPTION
	4/15/2022	25% Progress Set

ISSUE:
100% DESIGN DEVELOPMENT

DATE:
APRIL 30, 2022

STAMP:

NOT FOR CONSTRUCTION

SHEET TITLE:
CONCRETE DETAILS

SHEET NUMBER:
S5.1.1

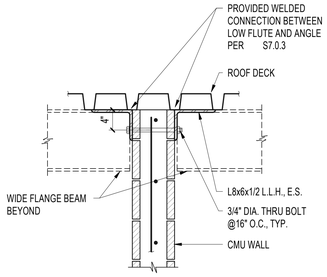

TYPICAL LOAD BEARING DETAIL - DECK TO CMU WALL CONN. (PARALLEL) 1" = 1'-0" 9 / S6.0.1

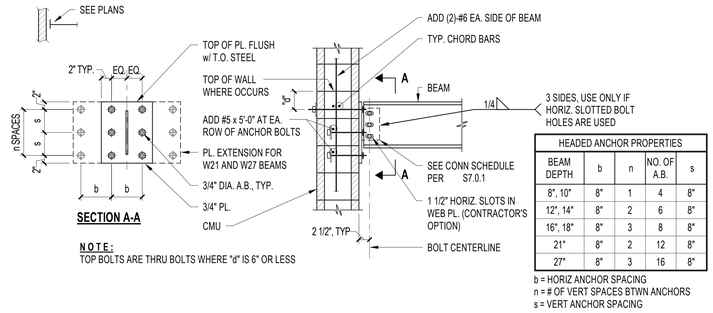

HEADED ANCHOR PROPERTIES				
BEAM DEPTH	b	n	NO. OF A.B.	s
8", 10"	8"	1	4	8"
12", 14"	8"	2	6	8"
16", 18"	8"	3	8	8"
21"	8"	2	12	8"
27"	8"	3	16	8"

b = HORIZ ANCHOR SPACING
n = # OF VERT SPACES BTWN ANCHORS
s = VERT ANCHOR SPACING

TYPICAL LOAD BEARING DETAIL - BEAM CONN. TO CMU WALL 1" = 1'-0" 4 / S6.0.1

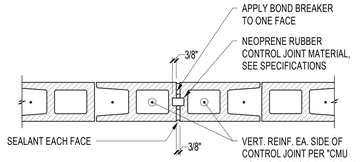

COURSES WITHOUT HORIZONTAL REINF.

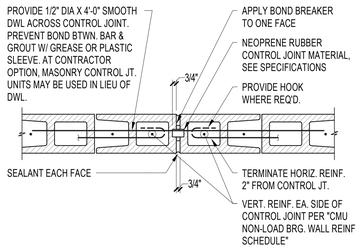

COURSES WITH HORIZONTAL REINF.

NOTES:

1. CONTROL JOINT SHALL BE CONSTRUCTED AS CONTINUOUS VERTICAL HEAD JOINTS USING FULL AND HALF MASONRY UNITS.
2. MORTAR SHALL BE RAKED BACK 3/4" AND FILLED WITH SEALANT PER ARCHITECTURAL DRAWINGS.
3. LOCATION OF CONTROL JOINTS ARE SHOWN ON ARCHITECTURAL DRAWINGS. CONTROL JOINTS SHALL OCCUR WITHIN 2' - 8" OF WALL OPENINGS. REFER TO THE NATIONAL CONCRETE MASONRY ASSOCIATION TEK 10-2C "CONTROL JOINTS FOR CONCRETE MASONRY WALLS - EMPIRICAL METHOD" FOR RECOMMENDED CONTROL JOINT SPACING AND LOCATIONS.
4. ADDITIONAL PRE-FORMED GASKETS OR JOINT FILLINGS REQUIRED FOR FIRE RATED WALLS. SEE ARCHITECTURAL DRAWINGS FOR LOCATIONS AND ADDITIONAL REQUIREMENTS.

TYPICAL DETAIL - CMU CONTROL JOINT 1" = 1'-0" 10 / S6.0.1

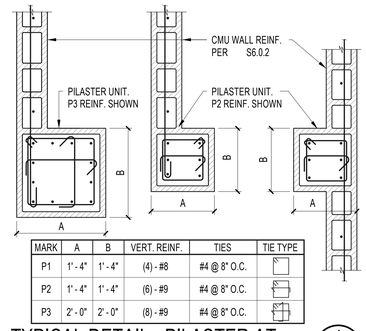

MARK	A	B	VERT. REINF.	TIES	TIE TYPE
P1	1' - 4"	1' - 4"	(4) - #8	#4 @ 8" O.C.	
P2	1' - 4"	1' - 4"	(6) - #9	#4 @ 8" O.C.	
P3	2' - 0"	2' - 0"	(8) - #9	#4 @ 8" O.C.	

TYPICAL DETAIL - PILASTER AT CMU WALL (PLAN VIEW) NO SCALE 1 / S6.0.1

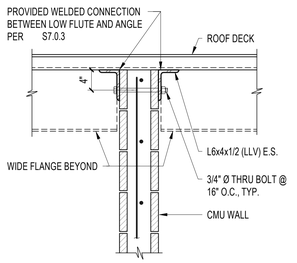

TYPICAL LOAD BEARING DETAIL - DECK TO CMU WALL CONN. (PERPENDICULAR) 1" = 1'-0" 11 / S6.0.1

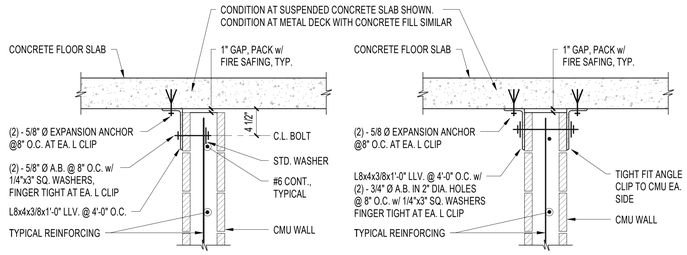

TYPICAL LOAD BEARING DETAIL - 8" CMU WALL BELOW SLAB 1" = 1'-0" 8 / S6.0.1

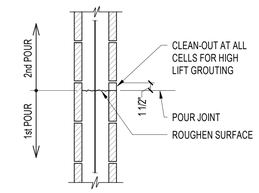

SECTION

TYPICAL DETAIL - HORIZONTAL CONST. JOINT IN CMU WALL 1" = 1'-0" 5 / S6.0.1

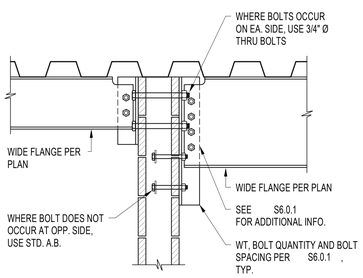

TYPICAL LOAD BEARING DETAIL - OVERLAPPING BEAM CONN. EACH SIDE OF WALL 1" = 1'-0" 12 / S6.0.1

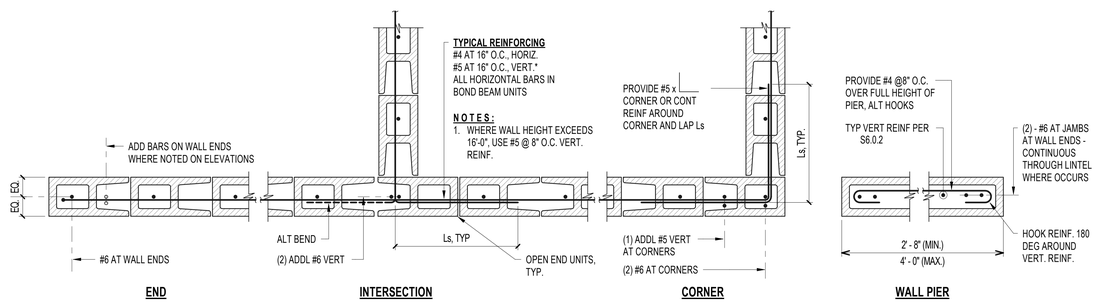

TYPICAL LOAD BEARING DETAIL - 8" CMU WALL (PLAN VIEW) 1" = 1'-0" 2 / S6.0.1

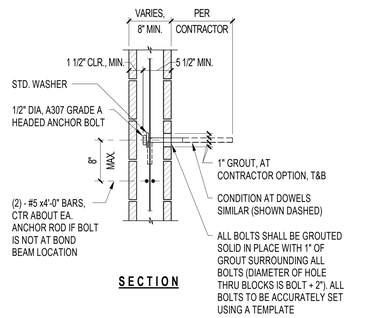

SECTION

TYPICAL DETAIL - BOLT IN CMU WALL 1" = 1'-0" 6 / S6.0.1

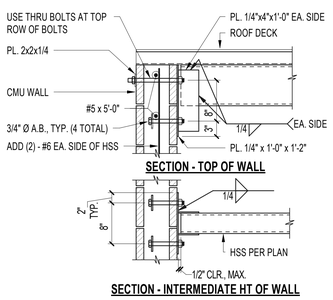

TYPICAL LOAD BEARING DETAIL - HSS BM. CONN. TO CMU WALL 1" = 1'-0" 13 / S6.0.1

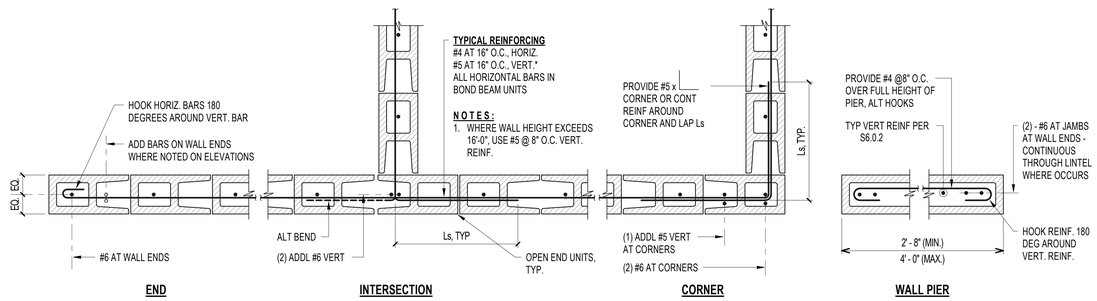

TYPICAL LOAD BEARING DETAIL - 8" CMU WALL (PLAN VIEW) (DSA ONLY) 1" = 1'-0" 3 / S6.0.1

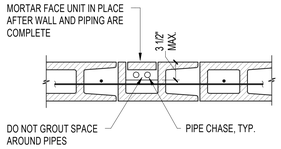

PLAN

TYPICAL DETAIL - PIPE CHASE IN CMU WALL 1" = 1'-0" 7 / S6.0.1

els architecture+ urban design
2040 Addison St, Berkeley, CA 94704
510.549.2929 | elsarch.com

PROJECT:

PIEDMONT COMMUNITY POOL

777 MAGNOLIA AVENUE PIEDMONT, CA 94611

PROJECT NUMBER: **21-103**

CLIENT: **Owner**

PROJECT TEAM:

ARCHITECT:
ELS ARCHITECTURE AND URBAN DESIGN
2040 Addison Street
Berkeley, CA 94704
P: 510.549.2929

CIVIL ENGINEER:
BKF ENGINEERS
4670 Willow Road, Suite 250
Pleasanton, CA 94588
P: 925.396.7700

LANDSCAPE ARCHITECT:
SWA
2200 Bridgeway
Sausalito, CA 94965
P: 415.332.5100

STRUCTURAL ENGINEER:
FORELL/ELSESSER
160 Pine Street, Suite 600
San Francisco, CA 94111
P: 415.837.0700

MEP / FIRE / TELECOM / SECURITY:
GUTTMANN & BLAEVOET
2351 Powell Street
San Francisco, CA 94133
P: 415.655.4000

AQUATICS:
AQUATIC DESIGN GROUP
2226 Faraday Avenue
Carlsbad, CA 92008
P: 760.438.8400

SPECIFICATIONS:
TOPFLIGHT SPECS
49 Geary Street, Suite 230
San Francisco, CA 94108-5748
P: 415.546.6033

REVISION

NUMBER	DATE	DESCRIPTION
	4/15/2022	25% Progress Set

ISSUE: **100% DESIGN DEVELOPMENT**

DATE: **APRIL 30, 2022**

STAMP:

NOT FOR CONSTRUCTION

SHEET TITLE:

TYPICAL LOAD BEARING & NON-LOAD BEARING CONCRETE MASONRY UNIT WALL DETAILS

SHEET NUMBER:

S6.0.1

WALL ELEVATION NOTES

1. a) FOR OPENINGS NOT WIDER THAN 12' - 0", SEE "LINTEL BAR LOCATION TYPES".
2. a) FOR TYPE 1, 2, AND 3 OPENINGS - SEE "CMU NON-LOAD BEA.RING LINTEL AND JAMB REINFORCEMENT SCHEDULE" BELOW.
   b) FOR TYPE 2 AND TYPE 3 OP'G AT PERPENDICULAR WALL, PROVIDE 48" JAMB WITH (1) #6 EA. CELL FOR 8" BLOCK AND (2) #6 EA. CELL FOR 12" BLOCK.
   c) FOR TYPE 4 OPENINGS, LINTEL SHALL SPAN ACROSS BOTH OPENINGS. INTERMEDIATE CMU WALL BTW. OPENINGS SHALL BE FULLY GROUTED W/ (2) #6 EA. CELL FOR 12" BLOCK AND (1) #6 EA. CELL FOR 8" BLOCK.
   d) LOCATE FIRST STIRRUP FOR JAMB REINF. 2" FROM EDGE OF OP'G.
3. a) SEE CMU GENERAL NOTES FOR CMU REINF. LAP SPLICE LENGTH.
4. a) FOR TYPE 1 OP'G UP TO 12'-0" WIDE, EXTEND LINTEL 32" BEYOND FACE OF OP'G.
   b) FOR TYPE 2 AND TYPE 3 OP'G UP TO 12'-0" WIDE, EXTEND LINTEL 32" BEYOND FACE OF OP'G AND INTO 48" JAMB SHOWN AND NOTED ON PLAN VIEW BELOW.
   c) FOR TYPE 4 OP'G, LINTEL SHALL SPAN ACROSS BOTH OPENINGS AND EXTEND 32" BEYOND OUTTERMOST FACE OF OPENINGS.
5. a) TYP. VERT. REINF. PER "CMU NON-LOAD BEARING WALL REINF. SCHEDULE". EXTEND VERTICAL BARS FULL HEIGHT OF WALL.
   b) FOR TYPE 2 AND TYPE 3 OPENINGS OR OPENINGS WIDER THAN 4'-0", BOND BEAM REINF. SHALL BE TIED TOGETHER WITH JAMB REINF. USING CORNER BARS. CORNER BAR SIZES SHALL MATCH JAMB REINF. PROVIDE LAP SPLICE EA WAY PER CMU GENERAL NOTE 9.
6. a) VERT REINF. ABOVE OP'G PER "CMU NON-LOAD BEARING WALL REINF. SCHEDULE"
   b) WHERE OPENINGS INTERSECT W/ TYPICAL WALL REINF., BOND BEAM REINF TO BE TIED TOGETHER W/ TYPICAL WALL REINF. USING CORNER BARS. CORNER BAR SIZES SHALL MATCH TYPICAL WALL REINF. PROVIDE LAP SPLICE EA WAY PER CMU GENERAL NOTE 9.
   c) PROVIDE #3 x 1' - 8" STIRRUP TO MATCH SPACING OF VERT WALL REINF. PROVIDE 180 DEG HOOK AT TOP OF WALL WHERE STRAIGHT BAR HEIGHT EXCEEDS WALL HEIGHT ABOVE OP'G OR WHEN OP'G OCCURS DIRECTLY ABOVE ONE ANOTHER.
   d) HOOK VERT. REINF. 180 AROUND HORIZ. REINF. ALTERNATE HOOK DIRECTION AT ADJACENT BARS
7. a) JAMB VERT. REINF. TO BE EXTENDED FULL HEIGHT OF WALL.
8. a) SEE RELATED WALL SECTIONS AND DETAILS FOR SIZE AND LOCATION OF BOND BEA.MS.
9. BOND BEA.M AT BOTTOM OF OP'G ONLY REQUIRED WHERE CELLS ARE NOT ALREA.DY FULLY GROUTED DOWN TO FOUNDATION.
   a) FOR INTERIOR WALL:
      - PROVIDE 8L-A BOND BEA.M (8" CMU) / 12L-A BOND BEA.M (12" CMU)
   b) FOR EXTERIOR WALL WITH OPENING NOT WIDER THAN 5'-0"
      - PROVIDE 8L-A BOND BEA.M (8" CMU) / 12L-A BOND BEA.M (12" CMU)
   c) FOR EXTERIOR WALL WITH OPENING NOT WIDER THAN 12'-0"
      - PROVIDE 8L-B BOND BEA.M (8" CMU) / 12L-B BOND BEA.M (12" CMU)
10. a) MAX OP'G WIDTH PER "CMU NON-LOAD BEARING LINTEL AND JAMB REINFORCEMENT SCHEDULE"

CMU NON-LOAD BEARING LINTEL AND JAMB REINFORCEMENT SCHEDULE

NOMINAL WALL THICKNESS (IN.)	MAXIMUM OPENING WIDTH (FEET)	HORIZONTAL LINTEL REINF.		NUMBER OF COURSES	LINTEL BAR LOCATION TYPE	NUMBER OF JAMB REINFORCING CELLS "N"
		BOTTOM	TOP			
8"	4' - 0"	(1) - #6	-	1	8L-A	1
8"	8' - 0"	(1) - #6	(1) - #6	2	8L-B	2
8"	12' - 0"	(1) - #6	(1) - #6	3	8L-B	3
12"	4' - 0"	(2) - #6	-	1	12L-A	1
12"	8' - 0"	(2) - #6	(2) - #6	2	12L-B	2
12"	12' - 0"	(2) - #6	(2) - #6	3	12L-B	3

LINTEL & JAMB REINF NOTES:

1. SEE S6.0.2 FOR ADDITIONAL INFORMATION.
2. CONTACT ENGINEER IF HEIGHT OF WALL ABOVE OPENING IS LESS THAN NUMBER OF COURSES SPECIFIED IN LINTEL REINF. SCHEDULE.
3. USE INVERTED BOND BEAM UNITS AT BOTH SIDES OF OPENING TO ACCOMMODATE THE EXTENSION OF BARS BEYOND OPENING.
4. PROVIDE TOP OF WALL CONNECTION PER S6.0.2 WITHIN 8" OF OPENING. FOR WALLS GREATER THAN 18'-0" TALL WITH OPENINGS GREATER THAN 4'-0", PROVIDE (2) TOP OF WALL CONNECTIONS WITHIN JAMB REINF. WIDTH.
5. PROVIDE LINTEL BLOCK AT BOTTOM OF BOND BEAM, TYPICAL.

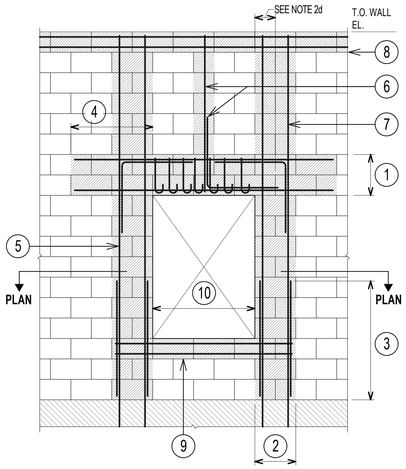

WALL ELEVATION
NO SCALE

NOTE:
ALL CELLS TO BE FULLY GROUTED.

HATCHING SHOWN TO HIGHLIGHT WALL REINF.

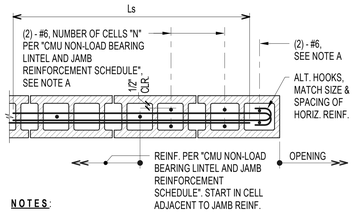

NOTES:

A. AT WALL HEIGHTS NOT EXCEEDING 13'-0", PROVIDE ONE #6 VERTICAL JAMB BAR (LOCATION TYPE 8A PER S6.0.2) IN PLACE OF (2) #6 BARS INDICATED.

JAMB REINF. - 8" CMU WALL

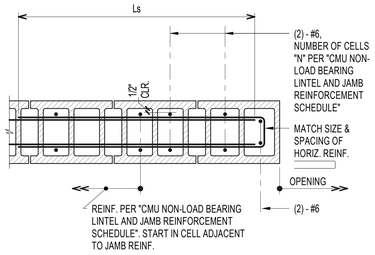

JAMB REINF. - 12" CMU WALL

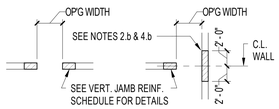

TYPE 1 OPENING **TYPE 3 OPENING**

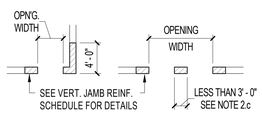

TYPE 2 OPENING **TYPE 4 OPENING**

OPENING TYPES (PLAN VIEW)
NO SCALE

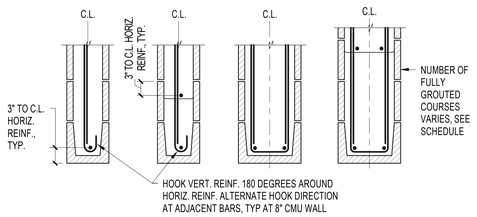

TYPE 8L-A **TYPE 8L-B** **TYPE 12L-A** **TYPE 12L-B**

LINTEL BAR LOCATION TYPES

TYPICAL NON-LOAD BEARING DETAIL - CMU WALL LARGE OPENING LINTEL & JAMB REINF

1" = 1'-0" (17 / S6.0.2)

WALL ELEVATION NOTES

1. NON-LOAD BEARING CMU LINTEL REINF. - SEE S6.0.2
2. WALL OP'G REINF. - SEE S6.0.2 (SMALL OP'G) OR S6.0.2 (LARGE OP'G)
3. PROVIDE ADD'L VERT E.S. OF OP'G - SEE S6.0.2
4. TYP CMU NON-LOAD BRG. WALL TOP CONN. - SEE S6.0.2

   LOCATE BOND BM. REINF. IN TOP FULL HEIGHT COURSE PER WALL REINF. NOTE 2 BELOW.
5. NON-LOAD BEARING WALL OP'G AROUND INCOMING BM. - SEE S6.0.2
6. PROVIDE (2) #5 HORIZ AT TOP COURSE BOND BM. WITH BOND BEAM REINF. LOCATION TYPE B OR C.
7. WHERE BOND BMS. IN ADJACENT WALLS OCCUR AT DIFFERENT ELEVATIONS, RETURN BEAM 2'-0" AROUND CORNER.
8. BOND BEAM PLACEMENT - SEE S6.0.2
9. BOND BEAM REINF. - SEE "CMU NON-LOAD BEARING WALL REINF. SCHEDULE" BELOW.
10. VERT REINF. - SEE "CMU NON-LOAD BEARING WALL REINF. SCHEDULE" BELOW.
11. SEE TS6.0.3 FOR CONN. AT FOUNDATION.
12. MAX OPENING WIDTH - SEE S6.0.2

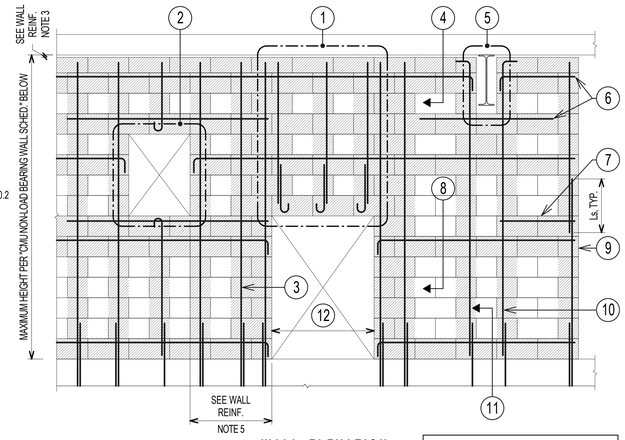

WALL ELEVATION
NO SCALE

NOTE:
ALL CELLS TO BE FULLY GROUTED.

HATCHING SHOWN TO HIGHLIGHT WALL REINF.

CMU NON-LOAD BEARING WALL REINF. SCHEDULE

NOMINAL WALL THICKNESS (IN.)	HORIZONTAL REINF.		VERTICAL REINF.		BAR LOCATION TYPE	MAXIMUM WALL HEIGHT (FT.)	BOND BEAM BAR PLACEMENT / LOCATION
	BOND BEAM REINF.	MAX. SPACING (IN.)	REINF.	MAX. SPACING (IN.)			
8"	(1) - #5	48	(1) - #5	48	8A	13' - 0"	TYPE A OR B - T&B OF WALL, SEE S6.0.2
8"	(1) - #5	48	(1) - #5	32	8A	15' - 0"	TYPE A OR B - T&B OF WALL, SEE S6.0.2
8"	(1) - #5	48	(1) - #5	24	8A	18' - 0"	TYPE A OR B - T&B OF WALL, SEE S6.0.2
12"	(2) - #5	48	(2) - #5	48	12A	17' - 0"	TYPE C - T&B OF WALL, SEE S6.0.2
12"	(2) - #5	48	(2) - #5	24	12A	22' - 0"	TYPE C - T&B OF WALL, SEE S6.0.2

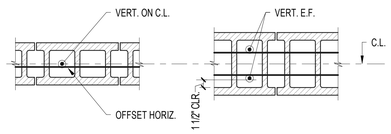

TYPE 8A **TYPE 12A**

BAR LOCATION TYPES

WALL REINFORCEMENT NOTES

1. GROUT SOLID ALL CELLS THAT CONTAIN REINFORCEMENT OR EMBEDDED ITEMS.
2. GROUT TOP AND BOTTOM COURSE SOLID. WHERE TOP COURSE IS NOT FULL BLOCK HEIGHT, GROUT COURSE BELOW SOLID AS WELL.
3. PROVIDE 1" CLEAR MINIMUM, 1 1/2" CLEAR MAXIMUM BETWEEN TOP OF WALL AND BOTTOM OF PLATE, DECK, OR FIREPROOFING ON BEAMS.
4. HOOK WALL REINF. 24" MIN. AT WALL OPENING EDGES.
5. WALL REINF ASSUMES:
   a.) MIN. SPACING OF 5'-4" BTW. DOOR AND SMALL OPENINGS REQ'D BY ARCHITECTURAL AND MEP.
   b.) MIN. SPACING OF 2'-8" BTW. OPENINGS AND END WALLS
   CONTRACTOR SHALL SUBMIT CONDITIONS NOT MEETING THESE REQUIREMENTS TO ENGINEER FOR REVIEW.

TYPICAL NON-LOAD BEARING DETAIL - CMU WALL ELEVATION, REINF. SCHEDULE, AND NOTES

1" = 1'-0" (2 / S6.0.2)

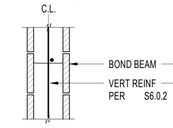

TYPE A **TYPE B**

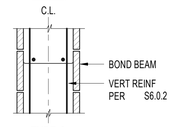

TYPE C

TYPICAL DETAIL - BOND BEAM BAR PLACEMENT

1" = 1'-0" (11 / S6.0.2)

TOP OF WALL CONNECTION SPACING SCHEDULE

MAXIMUM WALL THICKNESS	MAXIMUM WALL HEIGHT	TOP CONNECTION SPACING "S1"	TOP CONNECTION SPACING "S2"
8"	18' - 0"	4' - 0"	4' - 0"
12"	13' - 0"	4' - 0"	4' - 0"
12"	17' - 0"	3' - 0"	4' - 0"
12"	22' - 0"	2' - 0"	3' - 0"

TOP OF WALL NOTES:

1. SPACING "S1" AND "S2" SHALL NOT EXCEED 4'-0".
2. SEE NOTE 4 PER S6.0.2 FOR TOP OF WALL CONN. REQ. AT EDGES OF LARGE OP'GS.
3. SEE S6.0.2 FOR TYPICAL TOP OF WALL GAP
4. WHERE FIREPROOFING, ACOUSTIC, OR OTHER FILLER IS REQ'D PER ARCHTECTURAL, PROVIDE FILLER WITH MIN. 50% COMPRESSIBILITY.
5. FIREPROOFING REMOVED OR DAMAGED BY INSTALLATION OF TOP OF WALL CONN. SHALL BE REPLACED.
6. TYPICAL EXPANSION ANCHOR SHALL BE HILTI KWIK BOLT TZ OR APPROVED EQUIV.
7. AT CONTRACTORS OPTION, ALTERNATE TOP OF WALL CONN. PROVIDING EQUIV. OUT OF PLANE SUPPORT AND ALLOWING VERTICAL AND IN-PLANE MOVEMENT OF THE STRUCTURE RELATIVE TO THE WALL MAY BE SUBSTITUTED. CONTRACTOR SHALL SUBMIT ALL PROPOSED ALTERNATIVE TYPICAL DETAILS WITH SUPPORTING CALCULATIONS TO ENGINEER FOR APPROVAL PRIOR TO SHOP DRAWING PRODUCTION AND FIELD USE.

TYP. NON-LOAD BRG DETAIL TOP OF WALL CONNECTION

1" = 1'-0" (12 / S6.0.2)

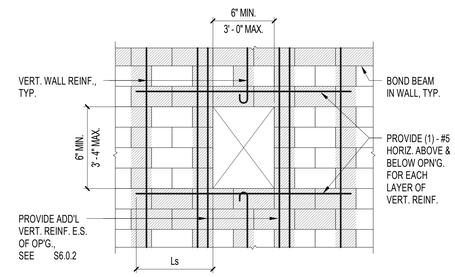

NOTES

1. SEE S6.0.2 FOR ADDITIONAL INFORMATION.
2. CONDUITS AND PIPES SHALL BE PLACED THROUGH SLEEVES OR BLOCK OUTS PROVIDED DURING WALL CONSTRUCTION.
3. WALL OPENINGS SHALL BE A MINIMUM OF 1' - 6" ABOVE ANY DOOR OR WINDOW OPENINGS AND SPACED AT LEAST THREE TIMES THE LARGEST OPENING.
4. WALL PENETRATIONS LESS THAN 6" DIAMETER OR 6" SQUARE THAT DO NOT DISRUPT REINFORCEMENT AND ARE SPACED AT LEAST 2 FEET APART DO NOT REQUIRE ADDITIONAL TRIM REINFORCEMENT.

NOTE:
ALL CELLS TO BE FULLY GROUTED.

HATCHING SHOWN TO HIGHLIGHT REINF. AROUND WALL OPENING.

TYPICAL NON-LOAD BEARING DETAIL - CMU WALL SMALL OPENING REINF.

1" = 1'-0" (3 / S6.0.2)

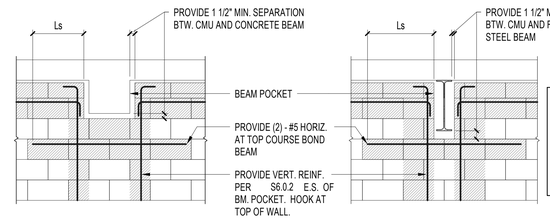

CONCRETE BEAM THRU TOP OF CMU WALL **STEEL BEAM THRU TOP OF CMU WALL**

NOTE:
ALL CELLS TO BE FULLY GROUTED.

HATCHING SHOWN TO HIGHLIGHT REINF. AROUND WALL OPENING AROUND INCOMING BEAM.

TYPICAL NON-LOAD BEARING DETAIL - CMU WALL OPENING AROUND INCOMING BEAM

1" = 1'-0" (5 / S6.0.2)

els architecture+ urban design
2040 Addison St, Berkeley, CA 94704
510.549.2929 | elsarch.com

PROJECT:

PIEDMONT COMMUNITY POOL

777 MAGNOLIA AVENUE PIEDMONT, CA 94611

PROJECT NUMBER:
21-103

CLIENT:
Owner

PROJECT TEAM:

ARCHITECT:
ELS ARCHITECTURE AND URBAN DESIGN
2040 Addison Street
Berkeley, CA 94704
P: 510.549.2929

CIVIL ENGINEER:
BKF ENGINEERS
4670 Willow Road, Suite 250
Pleasanton, CA 94588
P: 925.396.7700

LANDSCAPE ARCHITECT:
SWA
2200 Bridgeway
Sausalito, CA 94965
P: 415.332.5100

STRUCTURAL ENGINEER:
FORELL/ELSESSER
160 Pine Street, Suite 600
San Francisco, CA 94111
P: 415.837.0700

MEP / FIRE / TELECOM / SECURITY:
GUTTMANN & BLAEVOET
2351 Powell Street
San Francisco, CA 94133
P: 415.655.4000

AQUATICS:
AQUATIC DESIGN GROUP
2226 Faraday Avenue
Carlsbad, CA 92008
P: 760.438.8400

SPECIFICATIONS:
TOPFLIGHT SPECS
49 Geary Street, Suite 230
San Francisco, CA 94108-5748
P: 415.546.6033

REVISION

NUMBER	DATE	DESCRIPTION
	4/15/2022	25% Progress Set

ISSUE:
100% DESIGN DEVELOPMENT

DATE:
APRIL 30, 2022

STAMP:

NOT FOR CONSTRUCTION

SHEET TITLE:
TYPICAL NON-LOAD BEARING CONCRETE MASONRY UNIT (CMU) DETAILS

SHEET NUMBER:
S6.0.2

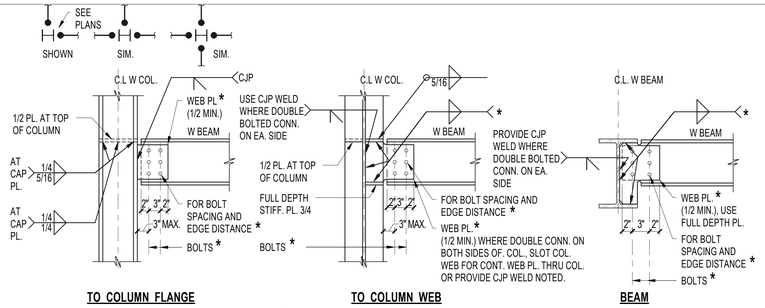

TO COLUMN FLANGE **TO COLUMN WEB** **BEAM**

* **NOTE:** SEE CONNECTION SCHEDULE.

TYPICAL DOUBLE BOLTED CONNECTION AT FLOOR OR ROOF (SFRS) — 17 / S7.0.1

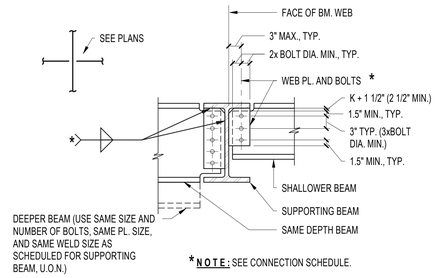

* **NOTE:** SEE CONNECTION SCHEDULE.

TYPICAL BEAM TO BEAM SIMPLE CONNECTION — 9 / S7.0.1

BEAM WEB CONNECTION SCHEDULE

BEAM SIZE	NO. OF BOLTS (PER ROW)	MIN. TOP OF BEAM TO C.L. 1st BOLT	SINGLE ROW OF BOLTS			DOUBLE ROW OF BOLTS		
			BOLT DIAM.	WEB PL. THICKNESS	WEB PL. WELD	BOLT DIAM.	WEB PL. THICKNESS	WEB PL. WELD
W8	2	2 1/2"	7/8" Ø	3/8"	1/4"	7/8" Ø	1/2"	5/16"
W10	2	2 1/2"	7/8" Ø	3/8"	1/4"	7/8" Ø	1/2"	5/16"
W12, W14	3	3"	7/8" Ø	3/8"	1/4"	7/8" Ø	1/2"	5/16"
W16, W18	4	3"	7/8" Ø	3/8"	1/4"	7/8" Ø	1/2"	5/16"
W21	5	4 1/2"	7/8" Ø	1/2"	5/16"	7/8" Ø	1/2"	5/16"
W24	6	4 1/2"	7/8" Ø	1/2"	5/16"	7/8" Ø	1/2"	5/16"
W27	7	4 1/2"	7/8" Ø	1/2"	5/16"	1" Ø	3/4"	1/2"
W30	8	4 1/2"	7/8" Ø	1/2"	5/16"	1" Ø	3/4"	1/2"
W33	9	4 1/2"	7/8" Ø	1/2"	5/16"	1" Ø	3/4"	1/2"
W36	10	4 1/2"	7/8" Ø	1/2"	5/16"	1" Ø	3/4"	1/2"
W40	11	4 1/2"	7/8" Ø	1/2"	5/16"	1" Ø	3/4"	1/2"

1. WELDING FOR WEB PL. SHALL BE AS SHOWN IN THE SCHEDULE, BUT NOT SMALLER THAN THE AISC MINIMUM WELD THICKNESS.
2. USE A325-N BOLTS TYPICAL, U.O.N.
   USE A325-SC BOLTS FOR ALL MOMENT CONNECTIONS AND WHERE NOTED ON OTHER DETAILS.
3. SEE TYPICAL BEAM-TO-BEAM AND BEAM-TO-COLUMN DETAILS FOR BOLT SPACING AND EDGE DISTANCE REQUIREMENTS.
4. USE SLOTTED HOLES FOR W27 AND DEEPER BEAMS AT COLUMNS.

BEAM WEB CONNECTION SCHEDULE — 1 / S7.0.1

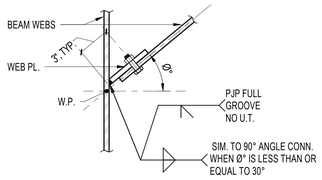

PLAN

SEE BEAM TO BEAM CONNECTION DETAILS FOR INFO. NOT NOTED.

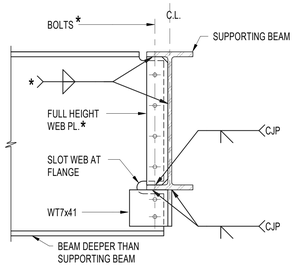

* SEE CONNECTION SCHEDULE. USE BOLTS, WELDS, AND PLATE AS SCHEDULED FOR DEEPER BEAM.

NOTE: THIS DETAIL REQUIRED ONLY WHERE SPECIFICALLY REFERRED TO ON PLANS, ELEVATIONS OR DETAILS.

TYPICAL SKEWED BEAM WEB CONNECTION PLATE DETAIL — 22 / S7.0.1

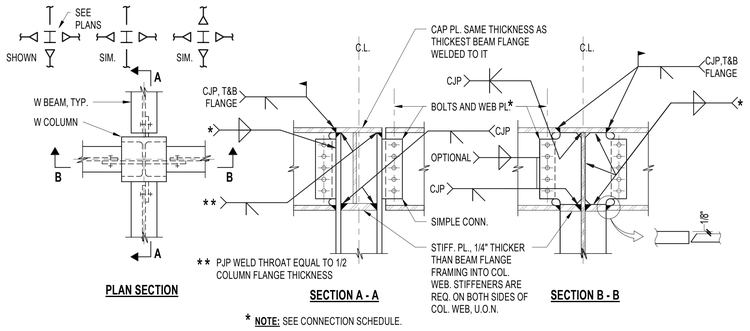

PLAN SECTION **SECTION A - A** **SECTION B - B**

* **NOTE:** SEE CONNECTION SCHEDULE.

TYPICAL BEAM TO BEAM CONNECTION — 18 / S7.0.1

TYPICAL BEAM TO COLUMN CONNECTION AT ROOF - MOMENT CONNECTION TO COLUMN WEB, SIMPLE OR MOMENT CONNECTIONS TO COLUMN FLANGE — 10 / S7.0.1

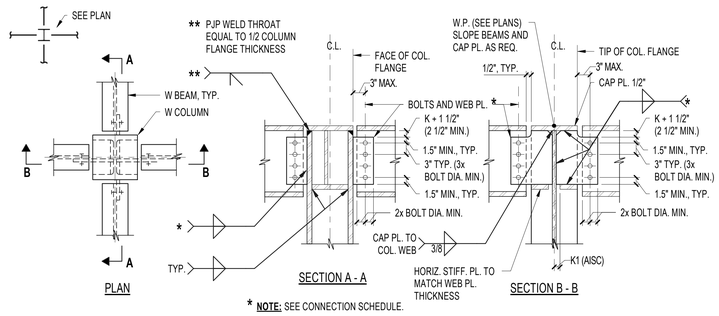

PLAN **SECTION A - A** **SECTION B - B**

* **NOTE:** SEE CONNECTION SCHEDULE.

TYPICAL BEAM TO COLUMN ALL SIMPLE CONNECTIONS AT ROOF — 2 / S7.0.1

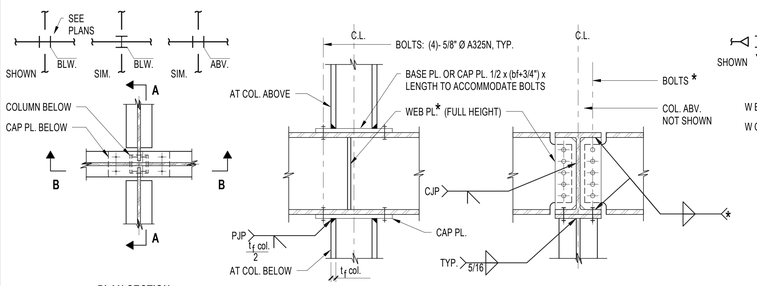

PLAN SECTION **SECTION A-A** **SECTION B-B**

* **NOTE:** SEE CONNECTION SCHEDULE.

TYPICAL BEAM TO COLUMN CONNECTION - BEAM CONTINUOUS OVER OR UNDER COLUMN — 19 / S7.0.1

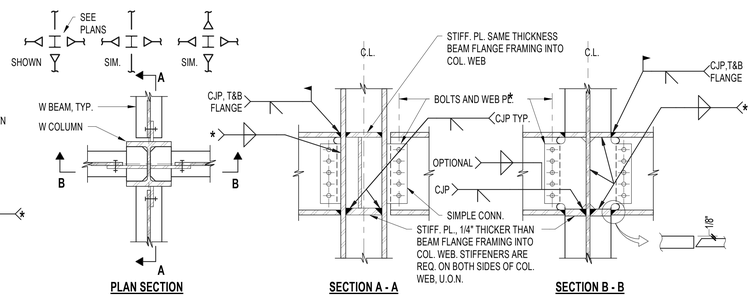

PLAN SECTION **SECTION A - A** **SECTION B - B**

* **NOTE:** SEE CONNECTION SCHEDULE.

NON SEISMIC MOMENT CONNECTIONS

TYPICAL BEAM TO COLUMN CONNECTION AT FLOOR - MOMENT CONNECTION TO COLUMN WEB. SIMPLE OR MOMENT CONNECTIONS TO COLUMN FLANGE — 11 / S7.0.1

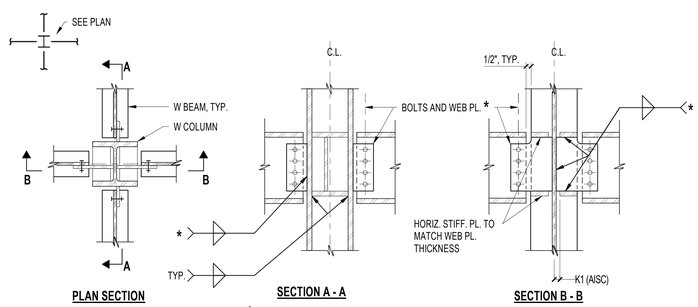

PLAN SECTION **SECTION A - A** **SECTION B - B**

* **NOTE:** SEE CONNECTION SCHEDULE.

TYPICAL BEAM TO COLUMN ALL SIMPLE CONNECTIONS AT FLOOR — 3 / S7.0.1

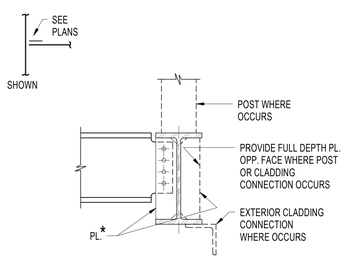

NOTE:
SEE STIFFENER PL. DETAIL FOR INFO. NOT NOTED

TYPICAL FULL DEPTH STIFFENER PLATE — 24 / S7.0.1

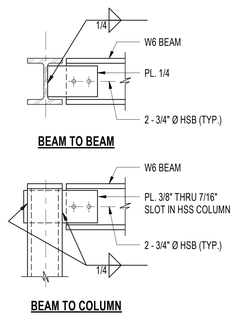

BEAM TO BEAM **BEAM TO COLUMN**

TYPICAL W6 SIMPLE CONNECTIONS — 20 / S7.0.1

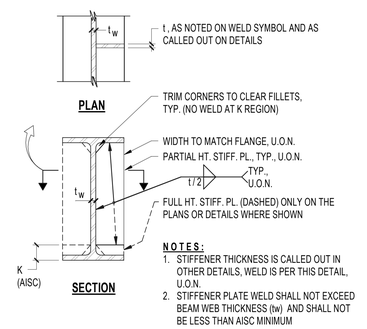

PLAN **SECTION**

NOTES:
1. STIFFENER THICKNESS IS CALLED OUT IN OTHER DETAILS, WELD IS PER THIS DETAIL, U.O.N.
2. STIFFENER PLATE WELD SHALL NOT EXCEED BEAM WEB THICKNESS (tw) AND SHALL NOT BE LESS THAN AISC MINIMUM

TYPICAL BEAM WEB OR COLUMN STIFFENER PLATE DETAIL — 12 / S7.0.1

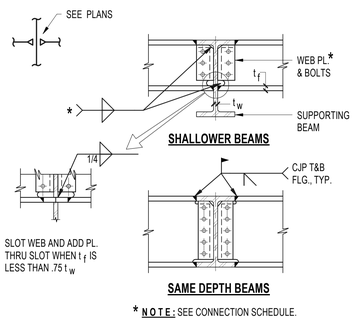

SHALLOWER BEAMS **SAME DEPTH BEAMS**

* **NOTE:** SEE CONNECTION SCHEDULE.

TYPICAL BEAM TO BEAM MOMENT CONNECTION — 8 / S7.0.1

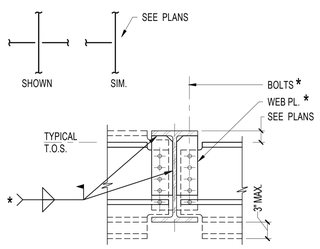

PROVIDE LEDGERS FOR DECK SUPPORT. SEE TYPICAL DECK SUPPORT LEDGER DETAIL.

* **NOTE:** SEE CONNECTION SCHEDULE.

TYPICAL BEAM TO BEAM CONN. DEPRESSED FLOOR BEAMS — 4 / S7.0.1

els architecture+ urban design
2040 Addison St, Berkeley, CA 94704
510.549.2929 | elsarch.com

PROJECT:

PIEDMONT COMMUNITY POOL

777 MAGNOLIA AVENUE PIEDMONT, CA 94611

PROJECT NUMBER:
21-103

CLIENT:
Owner

PROJECT TEAM:

ARCHITECT:
ELS ARCHITECTURE AND URBAN DESIGN
2040 Addison Street
Berkeley, CA 94704
P: 510.549.2929

CIVIL ENGINEER:
BKF ENGINEERS
4670 Willow Road, Suite 250
Pleasanton, CA 94588
P: 925.396.7700

LANDSCAPE ARCHITECT:
SWA
2200 Bridgeway
Sausalito, CA 94965
P: 415.332.5100

STRUCTURAL ENGINEER:
FORELL/ELSESSER
160 Pine Street, Suite 600
San Francisco, CA 94111
P: 415.837.0700

MEP / FIRE / TELECOM / SECURITY:
GUTTMANN & BLAEVOET
2351 Powell Street
San Francisco, CA 94133
P: 415.655.4000

AQUATICS:
AQUATIC DESIGN GROUP
2226 Faraday Avenue
Carlsbad, CA 92008
P: 760.438.8400

SPECIFICATIONS:
TOPFLIGHT SPECS
49 Geary Street, Suite 230
San Francisco, CA 94108-5748
P: 415.546.6033

REVISION

NUMBER	DATE	DESCRIPTION
	4/15/2022	25% Progress Set

ISSUE:
100% DESIGN DEVELOPMENT

DATE:
APRIL 30, 2022

STAMP:

NOT FOR CONSTRUCTION

SHEET TITLE:
TYPICAL STEEL DETAILS

SHEET NUMBER:
S7.0.1

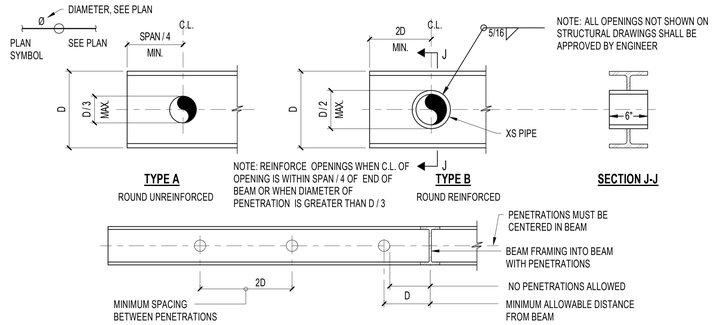

BEAM WEB PENETRATION LOCATION CRITERIA AND DETAILS FOR ROUND PENETRATIONS

17 / S7.0.2

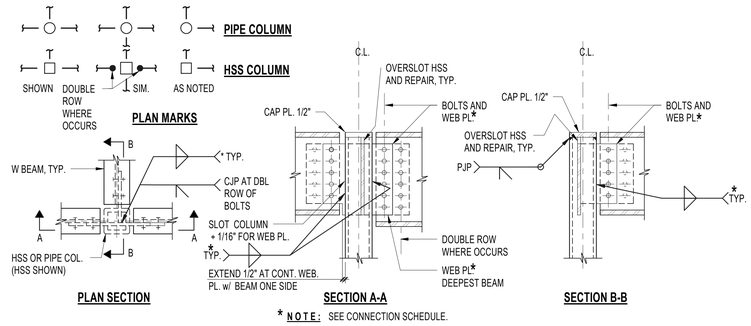

TYPICAL BEAM TO HSS COLUMN OR PIPE COLUMN, SIMPLE CONNECTION AT FLOOR

1 / S7.0.2

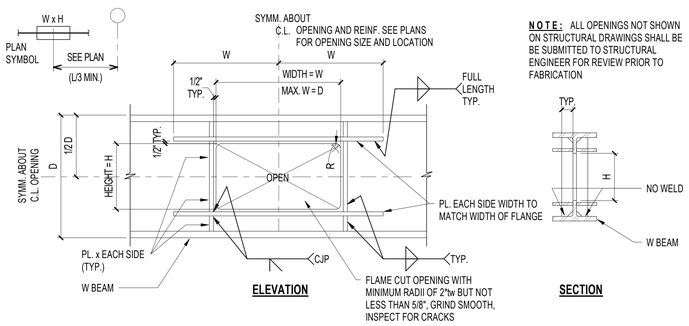

BEAM RECTANGULAR WEB PENETRATION REINFORCING DETAIL

18 / S7.0.2

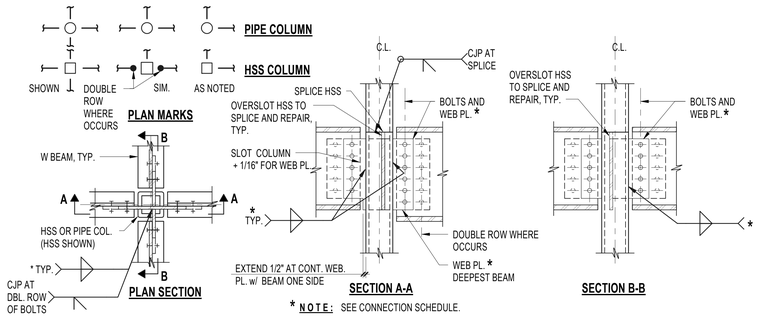

TYPICAL BEAM TO HSS COLUMN OR PIPE COLUMN, SIMPLE CONNECTION AT FLOOR

2 / S7.0.2

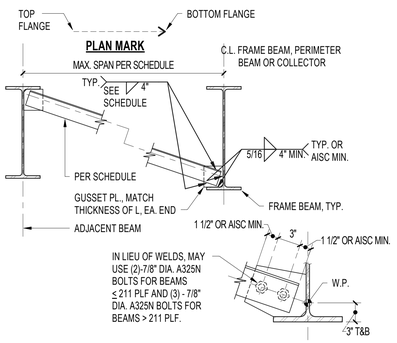

BRACE SCHEDULE			
MAX. SPAN	BEAM WT.	L SIZE	WELD
5'-0"	≤ 211 PLF	L4x4x3/8	1/4"
	> 211 PLF	L5x5x1/2	5/16"
10'-0"	≤ 211 PLF	L5x5x3/8	1/4"
	> 211 PLF	L6x6x1/2	5/16"
13'-0"	≤ 211 PLF	L6x6x3/8	1/4"
	> 211 PLF	L8x6x1/2	5/16"

TYPICAL COMPRESSION FLANGE BRACE

19 / S7.0.2

USER NOTES (DETAIL 11 / TS7.0.2):
MAXIMUM SHEAR IN THIS CONNECTION IS 84 KIPS. THE LIMITING FACTOR IS THE WELDS FROM THE HSS TO THE VERTICAL PLATES. SEE BACK UP CALCULATIONS FOR ASSUMPTIONS.

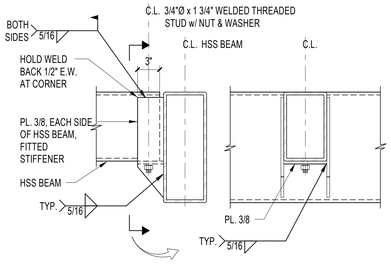

TYP. HSS BEAM TO HSS BEAM SIMPLE CONNECTION

11 / S7.0.2

USER NOTES:
THIS DETAIL SHOULD BE COORDINATED WITH EVERY OTHER CURB DETAIL THAT MIGHT BE ON OUR DRAWINGS IN DIFFERENT LOCATIONS.

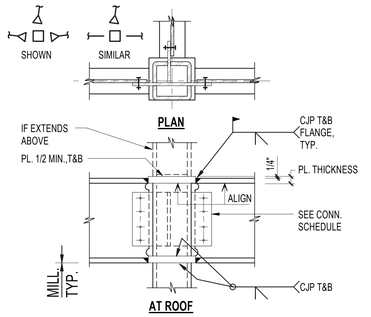

W BEAM TO HSS COLUMN MOMENT CONNECTION

3 / S7.0.2

USER NOTES (FOR TOP DETAIL):
MAXIMUM SHEAR IN THIS CONNECTION IS 170 KIPS. THE LIMITING FACTOR IS THE WELDS. SEE BACK UP CALCULATIONS FOR ASSUMPTIONS.

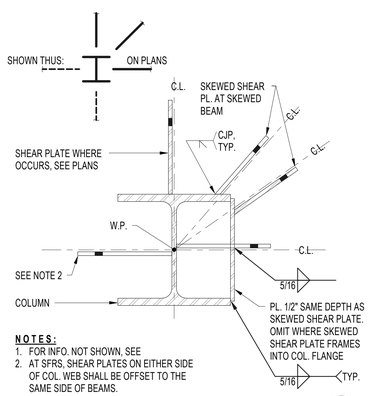

TYP. SKEWED BM. TO COL. CONN.

1 1/2" = 1'-0" 24 / S7.0.2

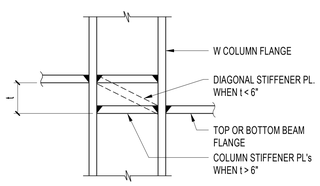

NOTE: FOR STIFFENER PL. SIZE & WELDING, SEE TYPICAL MOMENT CONNECTION DETAILS.

TYPICAL VERTICAL OFFSET OF COLUMN STIFFENER PLATES

1" = 1'-0" 20 / S7.0.2

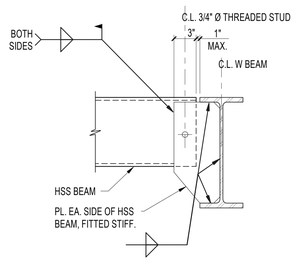

TYPICAL HSS BEAM TO W BEAM SIMPLE CONNECTION

12 / S7.0.2

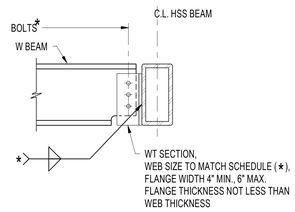

* NOTE: SEE CONNECTION SCHEDULE.

TYPICAL W BEAM TO HSS BEAM SIMPLE CONNECTION

8 / S7.0.2

USER NOTES (FOR BOTTOM DETAIL):
MAXIMUM SHEAR IN THIS CONNECTION IS 117 KIPS. THE LIMITING FACTOR IS THE ANGLE LEG BUCKLING. SEE BACK UP CALCULATIONS FOR ASSUMPTIONS.

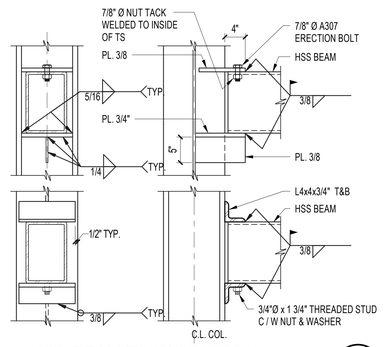

HSS BEAM TO W COLUMN CONNECTION

4 / S7.0.2

els architecture+ urban design
2040 Addison St, Berkeley, CA 94704
510.549.2929 | elsarch.com

PROJECT:

PIEDMONT COMMUNITY POOL

777 MAGNOLIA AVENUE PIEDMONT, CA 94611

PROJECT NUMBER: 21-103

CLIENT: Owner

PROJECT TEAM:

ARCHITECT:
ELS ARCHITECTURE AND URBAN DESIGN
2040 Addison Street
Berkeley, CA 94704
P: 510.549.2929

CIVIL ENGINEER:
BKF ENGINEERS
4670 Willow Road, Suite 250
Pleasanton, CA 94588
P: 925.396.7700

LANDSCAPE ARCHITECT:
SWA
2200 Bridgeway
Sausalito, CA 94965
P: 415.332.5100

STRUCTURAL ENGINEER:
FORELL/ELSESSER
160 Pine Street, Suite 600
San Francisco, CA 94111
P: 415.837.0700

MEP / FIRE / TELECOM / SECURITY:
GUTTMANN & BLAEVOET
2351 Powell Street
San Francisco, CA 94133
P: 415.655.4000

AQUATICS:
AQUATIC DESIGN GROUP
2226 Faraday Avenue
Carlsbad, CA 92008
P: 760.438.8400

SPECIFICATIONS:
TOPFLIGHT SPECS
49 Geary Street, Suite 230
San Francisco, CA 94108-5748
P: 415.546.6033

REVISION

NUMBER	DATE	DESCRIPTION
	4/15/2022	25% Progress Set

ISSUE: **100% DESIGN DEVELOPMENT**

DATE: **APRIL 30, 2022**

STAMP: NOT FOR CONSTRUCTION

SHEET TITLE: **TYPICAL STEEL DETAILS**

SHEET NUMBER: **S7.0.2**

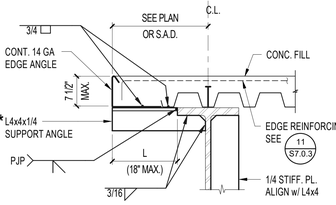

SUPPORT ANGLE SPACING	
L	SPACING
8" < L <= 12"	4'-0" O.C.
12" < L <= 18"	2'-0" O.C.

* SHORING MAY BE USED IN LIEU OF L's.

TYPICAL EDGE OF DECK AT LARGE OVERHANGS (21 / S7.0.3)

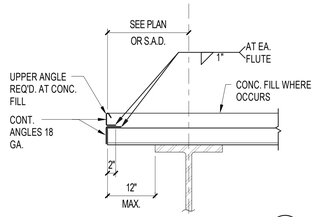

DECK FLUTES PERPENDICULAR TO BEAM

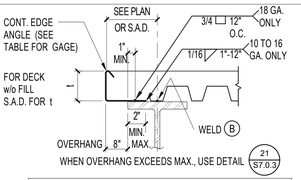

EDGE ANGLE THICKNESS (GAGE)							
t	OVERHANG						
	2"	3"	4"	5"	6"	7"	8"
4"	16	16	16	14	12	12	12
4 1/2"	16	16	16	14	12	12	12
5"	16	16	14	14	12	12	12
5 1/2"	16	16	14	12	12	12	10
6"	16	16	14	12	12	12	10
6 1/2"	16	14	14	12	12	12	10
7"	14	14	12	12	12	12	10
7 1/2"	14	12	12	12	12	10	10

DECK FLUTES PARALLEL TO BEAM
(USE FOR FLUTES SKEWED RELATIVE TO BEAM)

TYPICAL EDGE OF DECK DETAIL (13 / S7.0.3)

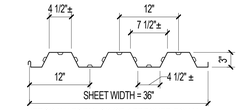

VERCO W3 FORMLOK OR APPROVED EQUAL

TYPE A DECK

MIN. I (in^4)	
16GA	1.509
18GA	1.203
20GA	0.896
22GA	0.718

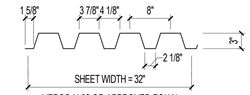

VERCO N-32 OR APPROVED EQUAL

TYPE B DECK

MIN. I (in^4)	
16GA	1.647
18GA	1.223
20GA	0.837
22GA	0.655

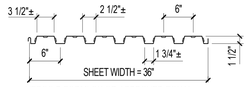

VERCO B FORMLOK OR APPROVED EQUAL

TYPE C DECK

MIN. I (in^4)	
16GA	0.377
18GA	0.302
20GA	0.216
22GA	0.175

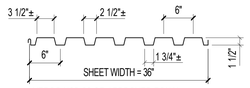

VERCO HSB-36 OR APPROVED EQUAL

TYPE D DECK

MIN. I (in^4)	
16GA	0.377
18GA	0.302
20GA	0.216
22GA	0.175

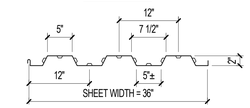

VERCO W2 FORMLOK OR APPROVED EQUAL

TYPE E DECK

MIN. I (in^4)	
16GA	0.694
18GA	0.555
20GA	0.423
22GA	0.340

METAL DECK PROFILES AND MINIMUM PROPERTIES (10 / S7.0.3)

DECK AND FILL MARK (SEE PLAN) 1	DECK GAGE AND PROFILE TYPE, SEE 10	DECK WELDS, SEE DETAIL(s) 3 4						FILL THICKNESS ABOVE DECK - FILL TYPE	FILL REINFORCEMENT	REMARKS
		WELD A		WELD B		WELD C				
		SIZE AND TYPE	# PER SHEET	SIZE AND TYPE	SPACING	SIZE AND TYPE	SPACING			
1	A - 18 GA	3/4" Ø P.W.	4	3/4" Ø P.W.	18"	B.P.	24"	3 1/4" LWC	#4@12"	2ND FLOOR / ROOF

P.W. = PUDDLE WELD, TSW = TOP SEAM WELD (1 1/2" MIN.), B.P.= BUTTON PUNCH, VSC2=VERCO SIDELAP CONNECTION 2

STEEL DECK AND FILL SCHEDULE (1 / S7.0.3)

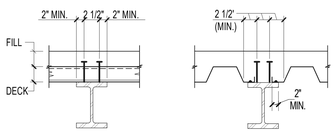

DECK PERPENDICULAR | ***DECK SPLIT**

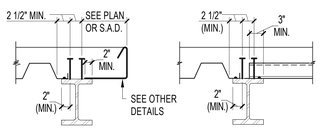

DECK EDGE | **DIRECTION CHANGE**

* SPLIT DECK REQUIRED FOR DOUBLE STUDS, U.O.N. ABOVE

TYPICAL DECK AND SHEAR STUD DOUBLE ROW OF STUDS (22 / S7.0.3)

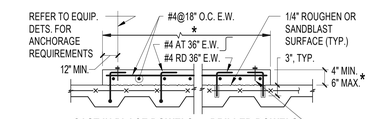

CAST IN PLACE DOWELS | **DRILLED DOWELS**
PAD ON DECK AND CONC. FILL

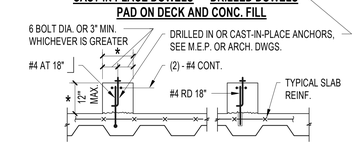

* SEE MECHANICAL, ELECTRICAL OR ARCHITECTURAL DRAWINGS FOR SIZES AND LOCATIONS OF CURBS AND PADS. COORDINATE DEPTH OF PAD OR HEIGHT OF CURBS WITH BOLT EMBEDMENT REQUIREMENTS.

CURB ON DECK AND CONC. FILL

TYPICAL CONCRETE EQUIPMENT SUPPORTS (18 / S7.0.3)

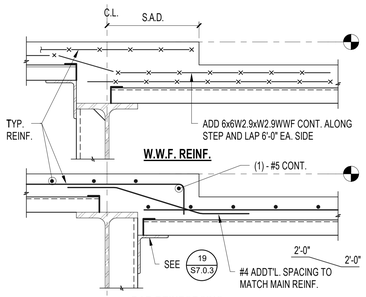

BAR REINFORCING

TYPICAL FILL REINFORCEMENT AT ELEVATION CHANGE (14 / S7.0.3)

STEEL DECK NOTES

1. SEE ROOF AND FLOOR FRAMING PLANS FOR EXTENT OF DECK TYPES. NOT ALL DECK TYPES ARE SHOWN.
2. DECK SIDE LAPS SHALL BE CRIMPED TOGETHER AT WELD POINTS BEFORE MAKING TOP SEAM WELDS.
3. SEE TYPICAL DETAILS ON THIS SHEET FOR REINFORCEMENT REQUIRED FOR OPENINGS IN THE DECK. SEE ARCHITECTURAL, MECHANICAL AND ELECTRICAL DRAWINGS FOR MAJOR OPENING SIZES AND LOCATIONS. OTHER OPENINGS ARE NOT SHOWN AND ARE SUBJECT TO REVIEW AND APPROVAL BY THE ARCHITECT AND STRUCTURAL ENGINEER.
4. SEE ARCHITECTURAL AND/OR STRUCTURAL DRAWINGS FOR EDGE OF DECK DIMENSIONS.
5. ALL BEAMS COVERED BY STEEL DECK ARE TO HAVE DECK WELDED TO IT.
6. STEEL DECK AND STEEL MEMBER SURFACES COVERED BY STEEL DECK SHALL NOT BE PAINTED AND SHALL BE FREE OF MOISTURE, RUST, SCALE, DIRT, SAND AND OTHER MATERIALS THAT WILL INTERFERE WITH THE WELDING OPERATIONS. SEE SPECS.
7. STEEL DECK CONTRACTOR SHALL PROVIDE AND INSTALL CLOSURE ANGLES, AND OTHER GAGE METAL SHAPES TO CLOSE ALL MISC. OPENINGS IN DECK AS NEEDED AROUND COLUMNS, VERTICAL DISCONTINUITIES, ETC.
8. ALL PUDDLE WELDS ARE 3/4"Ø OR EQUAL, REFER TO MANUFACTURER'S RECOMMENDATION.
9. STEEL DECK W/O CONCRETE MAY REQUIRE LIGHT GAGE EDGE ANGLES OR CLOSURE ANGLE, ETC. REFER TO ARCHITECTURAL DRAWINGS FOR EXTENT.
10. SHEAR STUDS MAY BE USED TO REPLACE PUDDLE WELD ON A ONE-TO-ONE BASIS.
11. LAYOUT OF DECK SHALL PROVIDE SHEETS OF SUFFICIENT LENGTH TO SPAN AT LEAST THREE SPANS. ENDS SHALL TERMINATE OVER A SUPPORT PERPENDICULAR TO THE DECK SPAN, EXCEPT AT OPENINGS OR BUILDING EDGES WHERE DECKS MAY BE CANTILEVERED AS SHOWN. SEE SPECIFICATIONS FOR COMPLETE REQUIREMENTS.
12. DO NOT PLACE CONDUITS OR PIPES IN CONCRETE FILL OVER METAL DECK WITHOUT THE APPROVAL OF THE ENGINEER.

STEEL DECK NOTES (2 / S7.0.3)

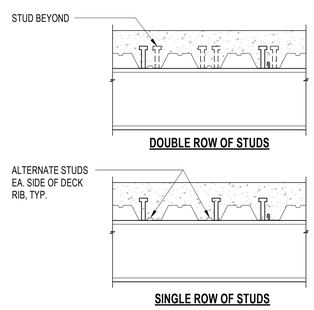

DOUBLE ROW OF STUDS | **SINGLE ROW OF STUDS**

TYPICAL STUD PLACEMENT AT DECK PERPENDICULAR TO BEAM (23 / S7.0.3)

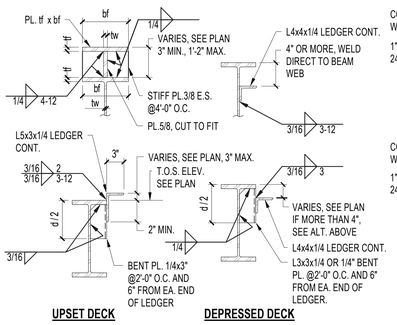

UPSET DECK | **DEPRESSED DECK**

TYPICAL LEDGER AT UPSET OR DEPRESSED DECK (19 / S7.0.3)

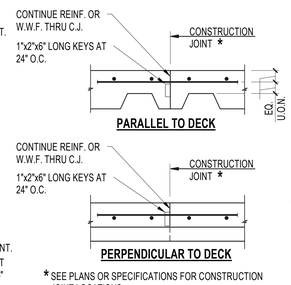

* SEE PLANS OR SPECIFICATIONS FOR CONSTRUCTION JOINT LOCATIONS

TYPICAL LAYOUT & CONSTRUCTION JOINTS

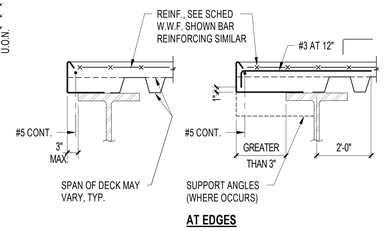

AT EDGES

TYPICAL REINFORCING DETAILS FOR CONCRETE FILLS ON METAL DECK (11 / S7.0.3)

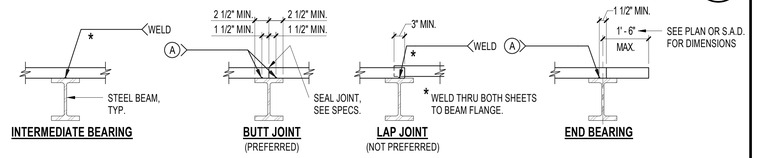

INTERMEDIATE BEARING | **BUTT JOINT** (PREFERRED) | **LAP JOINT** (NOT PREFERRED) | **END BEARING**

DECK PERPENDICULAR TO BEAMS

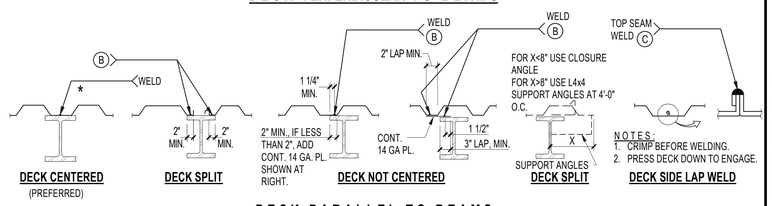

DECK CENTERED (PREFERRED) | **DECK SPLIT** | **DECK NOT CENTERED** | **DECK SPLIT** | **DECK SIDE LAP WELD**

DECK PARALLEL TO BEAMS

TYPICAL STEEL DECK TO BEAM WELD DETAILS - NO SHEAR STUDS OR CONCRETE FILL (3 / S7.0.3)

SEE STEEL DECK WELDING SCHEDULE, NOTES AND OTHER DETAILS

MARK	SIZE	NUMBER OF ROWS AT STUD SPACING (IN.)		ELEVATION	SHORING REQUIRED
SEE PLAN	SEE NOTE 1	ZONE 1	ZONE 2	ELEVATION TYPE	SEE GENERAL NOTES
S1	3/4" Ø x H	1 @ 12" O.C.	-	1	NO
S2	3/4" Ø x H	1 @ 12" O.C.	2 @ 12" O.C.	2	NO
S3	3/4" Ø x H	2 @ 12" O.C.	2 @ 12" O.C.	2	NO
TYP.	3/4" Ø x H	1 @ 12" O.C.	-	1	NO

NOTES:

1. INDICATES STUD DIAMETER AND HEIGHT OF STUD ABOVE TOP OF STEEL AFTER WELDING.
2. FOR SINGLE ROW OF STUDS, SEE 4 S7.0.3. FOR DOUBLE ROW OF STUDS, SEE 22 S7.0.3.
3. FOR ALL BEAMS WITH NO STUDMARK, USE "TYP" STUD INFORMATION SHOWN ABOVE.
4. STUDS SHOULD BEGIN 6 INCHES FROM GUSSET PLATES AT BEAM ENDS WHERE APPLICABLE.
5. OMIT STUDS WHERE NO CONCRETE FILL IS PRESENT.
6. FOR DECKS WITH LESS THAN 2 1/2 IN. OF FILL, PROVIDE 3/4 IN. CLEAR TO TOP OF STUD.

TYPICAL SHEAR STUD AND LAYOUT SCHEDULE (12 / S7.0.3)

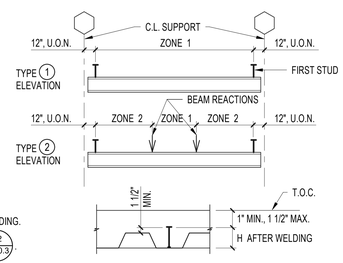

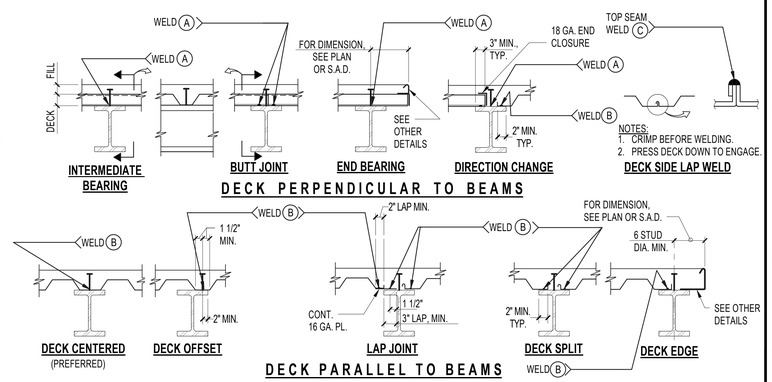

TYPICAL SHEAR STUD AND DECK WELD DETAILS - SINGLE ROW OF STUDS WITH CONCRETE FILL (4 / S7.0.3)

els architecture+ urban design
2040 Addison St, Berkeley, CA 94704
510.549.2929 | elsarch.com

PROJECT:

PIEDMONT COMMUNITY POOL

777 MAGNOLIA AVENUE PIEDMONT, CA 94611

PROJECT NUMBER: **21-103**

CLIENT: **Owner**

PROJECT TEAM:

ARCHITECT:
ELS ARCHITECTURE AND URBAN DESIGN
2040 Addison Street
Berkeley, CA 94704
P: 510.549.2929

CIVIL ENGINEER:
BKF ENGINEERS
4670 Willow Road, Suite 250
Pleasanton, CA 94588
P: 925.396.7700

LANDSCAPE ARCHITECT:
SWA
2200 Bridgeway
Sausalito, CA 94965
P: 415.332.5100

STRUCTURAL ENGINEER:
FORELL/ELSESSER
160 Pine Street, Suite 600
San Francisco, CA 94111
P: 415.837.0700

MEP / FIRE / TELECOM / SECURITY:
GUTTMANN & BLAEVOET
2351 Powell Street
San Francisco, CA 94133
P: 415.655.4000

AQUATICS:
AQUATIC DESIGN GROUP
2226 Faraday Avenue
Carlsbad, CA 92008
P: 760.438.8400

SPECIFICATIONS:
TOPFLIGHT SPECS
49 Geary Street, Suite 230
San Francisco, CA 94108-5748
P: 415.546.6033

REVISION

NUMBER	DATE	DESCRIPTION
	4/15/2022	25% Progress Set

ISSUE: **100% DESIGN DEVELOPMENT**

DATE: **APRIL 30, 2022**

STAMP:

NOT FOR CONSTRUCTION

SHEET TITLE: **TYPICAL METAL DECK DETAILS**

SHEET NUMBER: **S7.0.3**

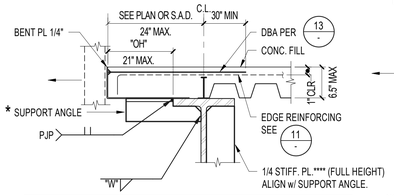

SUPPORT ANGLE SCHEDULE			
OH	ANGLE	SPACING**	WELD, "W"
17" < OH <= 21"	L4x4x1/4	4'-0" O.C.	3/16"

* SHORING MAY BE USED IN LIEU OF L's. SEE 17/-.

** OUTRIGGER ANGLES SHALL OCCURWITHIN 1'-0" MAX OF EACH END OF BENT PL SEGMENTS

*** SEE 13/- FOR INFO NOT SHOWN.

**** OMIT STIFF. PL WHERE SUPPORT ANGLE IS WITHIN 2' OF INTERIOR INFILL BM.

TYPICAL EDGE OF DECK AT LARGE OVERHANGS W/O SHORING (21 / S7.0.4)

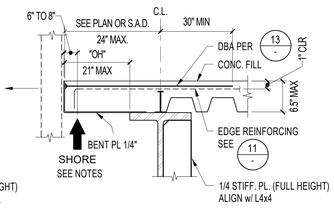

NOTES:
1. SHORING IS BY CONTRACTOR AND A DELEGATED DESIGN ITEM PER GENERAL NOTE S0.01. THIS DETAIL ASSUMES SHORING POSTS AT 6' O.C. MAX. USE 21/- INSTEAD IF E.O. DECK IS NOT SHORED OR IF SHORING POST SPACING IS > 6'.
2. CONCRETE SHALL REACH 100% COMPRESSIVE STRENGTH AND 14 DAYS PRIOR TO SUPPORTING SHORE POSTS FOR THE ONE STORY ABOVE.
3. SEE DETAIL 13/- & 21/- FOR INFO NOT SHOWN.

TYPICAL EDGE OF DECK AT LARGE OVERHANGS W/ SHORING (17 / S7.0.4)

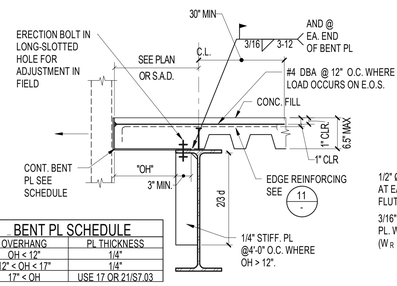

BENT PL SCHEDULE	
OVERHANG	PL THICKNESS
OH < 12"	1/4"
12" < OH < 17"	1/4"
17" < OH	USE 17 OR 21/S7.03

TYPICAL EDGE OF DECK DETAIL (13 / S7.0.4)

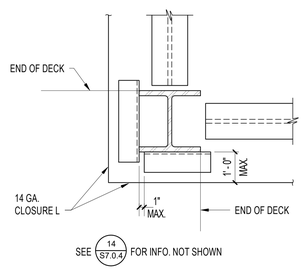

TYPICAL DECK SUPPORT AT CORNER COLUMN (18 / S7.0.4)

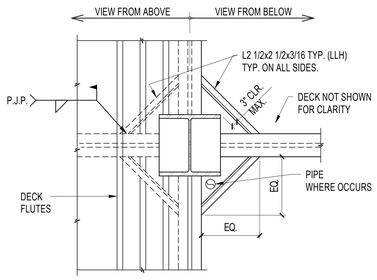

TYPICAL DECK SUPPORT DETAIL AT INTERIOR W COLUMNS (14 / S7.0.4)

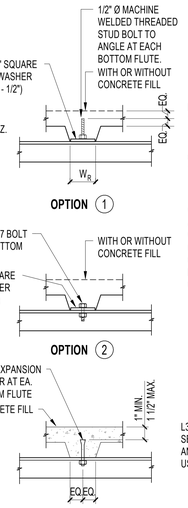

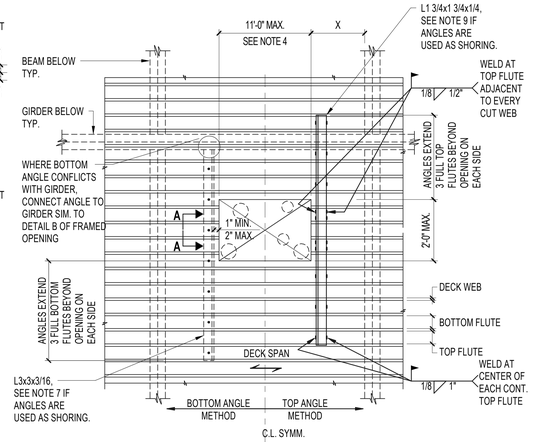

GENERAL NOTES:

1. SEE ARCH., M, E, & P DRAWINGS FOR SIZE AND LOCATIONS OF OPENINGS.
2. IF X IS NOT GREATER THAN 1'-0" ANGLE MAY BE OMITTED ON SIDE CLOSEST TO BEAM.
3. OPENING SHALL BE BLOCKED OUT PRIOR TO CONCRETE POUR AND DECK LEFT INTACT UNTIL 14 DAYS AFTER CONCRETE POUR.
4. OPENING DIMENSION SHALL BE CONFINED TO CLEAR SPACE BETWEEN EDGES OF ADJACENT BEAMS.
5. PROVIDE TRIM BAR AROUND OPENING PER TYPICAL DETAILS.

BOTTOM ANGLE METHOD NOTES:

6. ANGLES MAY BE ATTACHED BY DETAIL 1, 2 OR 3 PROVIDED THEY ARE INSTALLED BEFORE DECK IS CUT.
7. AT CONTRACTOR'S OPTION, DECK MAY BE CUT AHEAD OF CONCRETE POUR PROVIDED THAT THE ANGLES ARE INSTALLED BY DETAIL 1 OR 2 BEFORE THE DECK IS CUT. ANGLES SHALL BE L4x4x3/8

TOP ANGLE METHOD NOTES:

8. CONCRETE FILL MUST BE 4" MIN. TO USE TOP ANGLE REINFORCEMENT.
9. AT CONTRACTOR'S OPTION, DECK MAY BE CUT AHEAD OF CONCRETE POUR PROVIDED THAT THE ANGLES ARE INSTALLED BEFORE THE DECK IS CUT. ANGLES SHALL BE REPLACED BY FLAT HSS3x1 1/2 x1/8.

TYPICAL REINFORCED DECK OPENING WITH OR WITHOUT CONCRETE FILL (6 / S7.0.4)

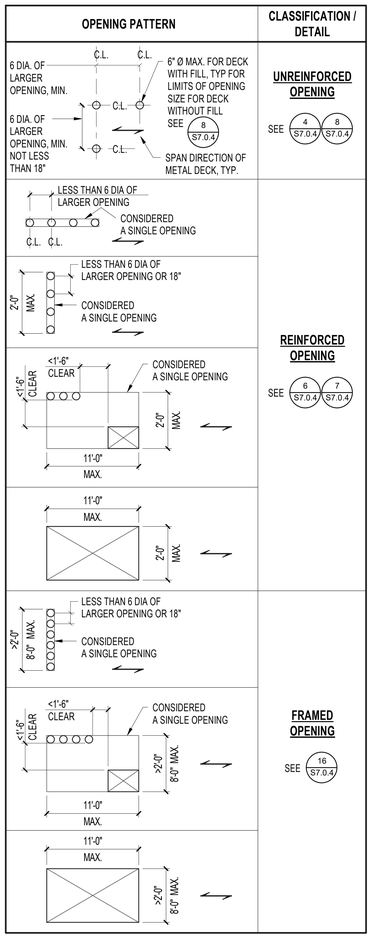

NOTE:
CHECK FIRST IF OPENING(S) MEET THE CRITERIA FOR UNREINFORCED.
IF NOT, CHECK IF OPENING(S) MEET THE CRITERIA FOR REINFORCED.
IF NOT, THEN OPENING(S) SHALL BE FRAMED.

CLASSIFICATION OF OPENINGS IN DECK (1 / S7.0.4)

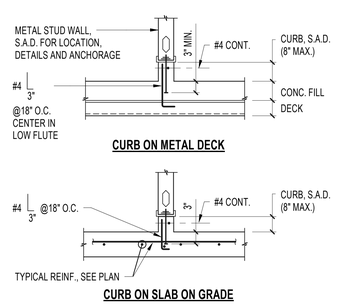

CONCRETE CURB DETAILS (19 / S7.0.4)

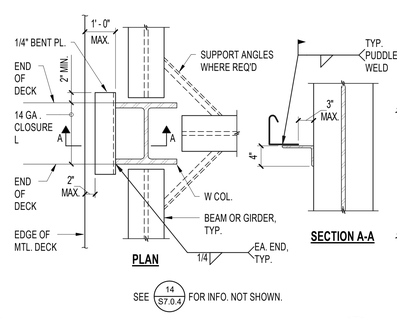

TYPICAL DECK SUPPORT AT EXTERIOR COLUMN (15 / S7.0.4)

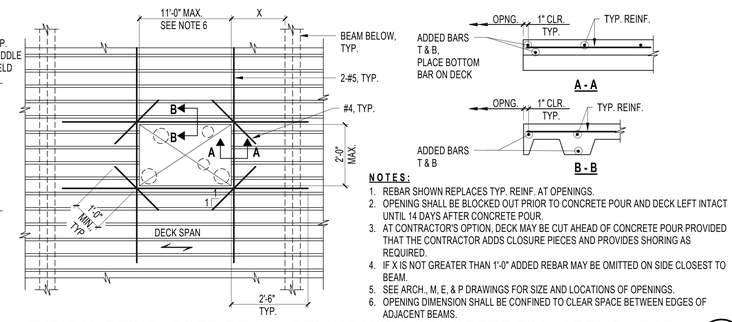

NOTES:
1. REBAR SHOWN REPLACES TYP. REINF. AT OPENINGS.
2. OPENING SHALL BE BLOCKED OUT PRIOR TO CONCRETE POUR AND DECK LEFT INTACT UNTIL 14 DAYS AFTER CONCRETE POUR.
3. AT CONTRACTOR'S OPTION, DECK MAY BE CUT AHEAD OF CONCRETE POUR PROVIDED THAT THE CONTRACTOR ADDS CLOSURE PIECES AND PROVIDES SHORING AS REQUIRED.
4. IF X IS NOT GREATER THAN 1'-0" ADDED REBAR MAY BE OMITTED ON SIDE CLOSEST TO BEAM.
5. SEE ARCH., M, E, & P DRAWINGS FOR SIZE AND LOCATIONS OF OPENINGS.
6. OPENING DIMENSION SHALL BE CONFINED TO CLEAR SPACE BETWEEN EDGES OF ADJACENT BEAMS.

TYPICAL REINFORCED DECK OPENING WITH CONCRETE FILL (APPLIES FOR FILL THICKNESS NOT LESS THAN 3") (7 / S7.0.4)

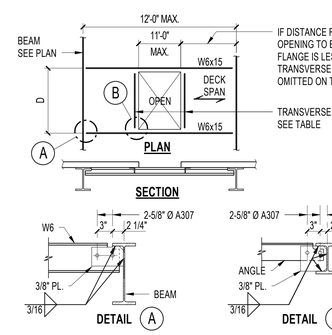

D	TYPE	TRANSVERSE FRAMING SECTION
0' TO 3'	FLOORS	L4x4x3/8
	ROOF	L3x3x3/8
3' TO 5'	FLOORS	L5x5x1/2
	ROOF	L4x4x3/8
5' TO 8'	FLOORS	W6x15
	ROOF	L5x5x1/2

NOTE: PROVIDE TRIM REINFORCING PER TYPICAL DETAIL

LARGE FRAMED DECK OPENING WITH OR WITHOUT CONCRETE FILL (OPENING UP TO 8 FEET WIDE) (16 / S7.0.4)

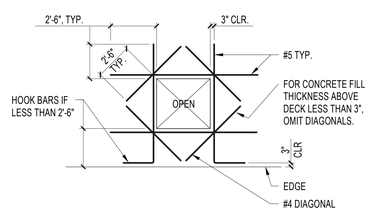

NOTES:
1. THIS DETAIL APPLIES WHERE CALLED FOR ON TYPICAL DETAILS AND AT ALL LARGE OPENINGS.
2. AT FILL REINFORCED WITH W.W.F. LESS THAN 4" THICK, DIAGONAL TRIM BARS (ONLY) ARE REQUIRED.

TYPICAL TRIM REINFORCEMENT AT OPENINGS (12 / S7.0.4)

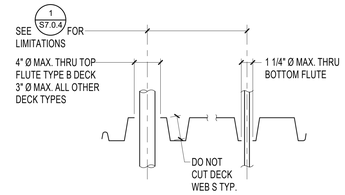

IF OPENINGS ARE CLOSER OR LARGER THAN SHOWN, REINFORCE DECK - SEE OTHER DETAILS.

TYPICAL UNREINFORCED OPENING AT DECK WITHOUT CONCRETE FILL (8 / S7.0.4)

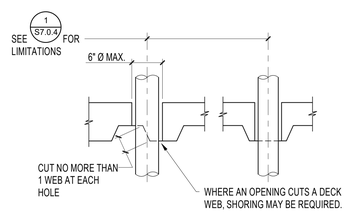

IF OPENINGS ARE CLOSER OR LARGER THAN SHOWN, REINFORCE DECK - SEE OTHER DETAILS.

TYPICAL UNREINFORCED OPENING AT DECK WITH CONCRETE FILL (4 / S7.0.4)

els architecture+ urban design
2040 Addison St, Berkeley, CA 94704
510.549.2929 | elsarch.com

PROJECT:

PIEDMONT COMMUNITY POOL

777 MAGNOLIA AVENUE PIEDMONT, CA 94611

PROJECT NUMBER:
21-103

CLIENT:
Owner

PROJECT TEAM:

ARCHITECT:
ELS ARCHITECTURE AND URBAN DESIGN
2040 Addison Street
Berkeley, CA 94704
P: 510.549.2929

CIVIL ENGINEER:
BKF ENGINEERS
4670 Willow Road, Suite 250
Pleasanton, CA 94588
P: 925.396.7700

LANDSCAPE ARCHITECT:
SWA
2200 Bridgeway
Sausalito, CA 94965
P: 415.332.5100

STRUCTURAL ENGINEER:
FORELL/ELSESSER
160 Pine Street, Suite 600
San Francisco, CA 94111
P: 415.837.0700

MEP / FIRE / TELECOM / SECURITY:
GUTTMANN & BLAEVOET
2351 Powell Street
San Francisco, CA 94133
P: 415.655.4000

AQUATICS:
AQUATIC DESIGN GROUP
2226 Faraday Avenue
Carlsbad, CA 92008
P: 760.438.8400

SPECIFICATIONS:
TOPFLIGHT SPECS
49 Geary Street, Suite 230
San Francisco, CA 94108-5748
P: 415.546.6033

REVISION

NUMBER	DATE	DESCRIPTION
	4/15/2022	25% Progress Set

ISSUE:
100% DESIGN DEVELOPMENT

DATE:
APRIL 30, 2022

STAMP:
NOT FOR CONSTRUCTION

SHEET TITLE:
TYPICAL METAL DECK DETAILS

SHEET NUMBER:
S7.0.4

COLUMN BASE PLATE SCHEDULE

COLUMN SIZE	ANCHORAGE INFO.					PLATE INFO.				B. P. DETAIL REFERENCE
	A.R. No.	A.R. DIAMETER	e	g	p	t	B	N	W	
W10	4	3/4"	1' - 6"	2"	8"		1' - 6"	1' - 6"		S7.0.5
W12	4	3/4"	1' - 6"	2"	8"		1' - 8"	1' - 8"		S7.0.5
W14	4	3/4"	1' - 6"	2"	8"		1' - 10"	1' - 10"		S7.0.5

COLUMN BASE PLATE SCHEDULE 1 / S7.0.5

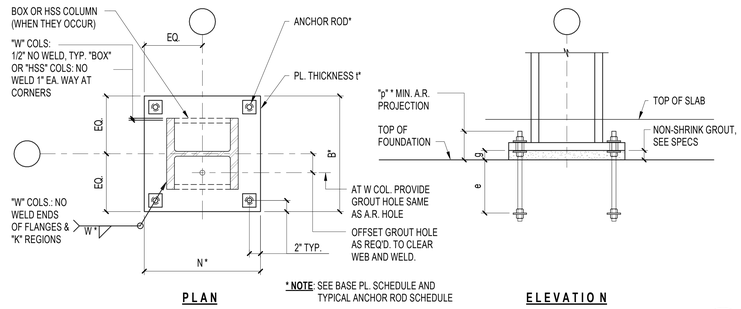

TYPICAL BASE PLATE GRAVITY COLUMNS 2 / S7.0.5

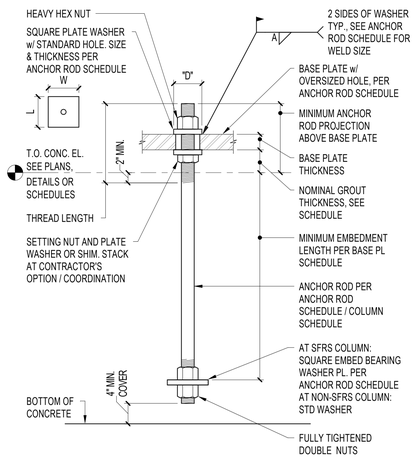

ANCHOR ROD SCHEDULE

ANCHOR ROD DIAMETER	BASE PLATE HOLE DIAMETER "D"	MINIMUM WASHER SIZE	MINIMUM WASHER t (SEE NOTE 3)	EMBED WASHER SIZE	EMBED BEARING WASHER THICKNESS (SEE NOTE 3)	WELD A
3/4"	1 5/16"	2"	1/4"	3"	1/2"	
1"	1 7/8"	3"	3/8"	4"	1/2"	
1 1/4"	2 1/8"	3 1/2"	1/2"	6"	3/4"	
1 1/2"	2 3/8"	4"	1/2"	6"	3/4"	
1 3/4"	2 7/8"	4 1/2"	3/4"	6"	3/4"	
2"	3 1/4"	5"	3/4"	6"	1"	
2 1/2"	3 3/4"	5 1/2"	1"	8"	1"	

NOTES:
1. SEE ANCHOR ROD AND BASE PLATE SCHEDULE.
2. WHERE WELD "A" IS NOT SHOWN, TACK WELD AS REQ'D. FOR ERECTION.
3. FOR F1554 GR. 105 ANCHOR RODS, ADD 1/4" TO MINIMUM WASHER AND EMBED BEARING WASHER THICKNESS.
4. ALL WASHERS AND EMBED BEARING WASHERS SHALL BE Fy = 50 KSI.

TYPICAL ANCHOR ROD AND WASHER SCHEDULE 4 / S7.0.5

els architecture+ urban design
2040 Addison St, Berkeley, CA 94704
510.549.2929 | elsarch.com

PROJECT:

PIEDMONT COMMUNITY POOL

777 MAGNOLIA AVENUE PIEDMONT, CA 94611

PROJECT NUMBER: **21-103**

CLIENT: **Owner**

PROJECT TEAM:

ARCHITECT:
ELS ARCHITECTURE AND URBAN DESIGN
2040 Addison Street
Berkeley, CA 94704
P: 510.549.2929

CIVIL ENGINEER:
BKF ENGINEERS
4670 Willow Road, Suite 250
Pleasanton, CA 94588
P: 925.396.7700

LANDSCAPE ARCHITECT:
SWA
2200 Bridgeway
Sausalito, CA 94965
P: 415.332.5100

STRUCTURAL ENGINEER:
FORELL/ELSESSER
160 Pine Street, Suite 600
San Francisco, CA 94111
P: 415.837.0700

MEP / FIRE / TELECOM / SECURITY:
GUTTMANN & BLAEVOET
2351 Powell Street
San Francisco, CA 94133
P: 415.655.4000

AQUATICS:
AQUATIC DESIGN GROUP
2226 Faraday Avenue
Carlsbad, CA 92008
P: 760.438.8400

SPECIFICATIONS:
TOPFLIGHT SPECS
49 Geary Street, Suite 230
San Francisco, CA 94108-5748
P: 415.546.6033

REVISION

NUMBER	DATE	DESCRIPTION
	4/15/2022	25% Progress Set

ISSUE: **100% DESIGN DEVELOPMENT**

DATE: **APRIL 30, 2022**

STAMP: NOT FOR CONSTRUCTION

SHEET TITLE: **STEEL COLUMN SCHEDULE & DETAILS**

SHEET NUMBER: **S7.0.5**

GENERAL NOTES

A. GENERAL

1. RAISE, LOWER, REMOVE, RELOCATE OR REPLACE WITH NEW AND RECONNECT TO EXISTING ALL PIPING AND DUCTWORK AS REQUIRED TO MAINTAIN EXISTING AREAS IN OPERATION DURING CONSTRUCTION.
2. VERTICAL AND HORIZONTAL OFFSETS SHOWN IN DUCTS AND PIPES INDICATE THE GENERAL RELATIONSHIP OF THE SYSTEMS. PROVIDE ADDITIONAL OFFSETS SIMILAR TO THOSE SHOWN AS REQUIRED TO SUIT CONSTRUCTION AND WORK DONE BY OTHER TRADES.
3. INSTALL ALL VALVES, CONTROLS, DAMPERS, ETC., IN ACCESSIBLE LOCATIONS. PROVIDE ADEQUATELY SIZED ACCESS DOORS WHERE REQUIRED.
4. INSTALL ALL PIPING AND DUCTWORK TO AVOID ARCHITECTURAL FRAMING, STRUCTURAL MEMBERS AND OTHER CONSTRUCTION. COORDINATE DUCT AND PIPING LAYOUT WITH ALL OTHER CONTRACT DIVISIONS OF WORK BEFORE FABRICATION AND INSTALLATION.
5. ALL EXISTING SERVICES TO EXISTING BUILDINGS MUST BE KEPT OPERATING DURING CONSTRUCTION. SHUTDOWN OF ANY BUILDING SYSTEM SHALL ONLY BE DONE AT TIMES ACCEPTABLE TO THE OWNER AND CONFIRMED IN WRITING. GIVE THE OWNER 48 HOURS ADVANCE NOTICE FOR THE SCHEDULING OF SHUTDOWNS. PROVIDE SUPPORT AND PROTECTION FOR ALL EXISTING PIPING AND/OR EQUIPMENT TO MAINTAIN THEM IN SERVICE THROUGHOUT CONSTRUCTION OR UNTIL THEIR SCHEDULED SHUTDOWN TIME.
6. REPAIR OR REPLACE EXISTING EQUIPMENT AND SERVICES WHERE THESE ARE DAMAGED DUE TO THE CONTRACTOR'S ACTIVITIES, TO THE SATISFACTION OF THE OWNER.

B. HVAC

1. EXAMINE ARCHITECTURAL DRAWINGS TO ENSURE THAT ALL DUCTS CROSSING FIRE AND/OR SMOKE SEPARATIONS ARE EQUIPPED WITH FIRE AND/OR SMOKE DAMPERS. NOTIFY THE ARCHITECT WHERE ADDITIONAL DAMPERS ARE REQUIRED.
2. PROVIDE REHEAT COIL TRANSITIONS AND TRANSITIONS TO SMOKE AND/OR FIRE DAMPERS AS REQUIRED.
3. LOCATE CEILING AIR OUTLETS ACCORDING TO THE ARCHITECTURAL REFLECTED CEILING PLANS. CONFIRM CEILING TYPES SHOWN ON ARCHITECTURAL DRAWINGS AND INSTALL CEILING TYPE SUPPLY AND RETURN OR EXHAUST OUTLETS TO SUIT.
4. ALL DUCT SIZES SHOWN ARE INSIDE CLEAR DIMENSIONS.
5. WHERE FLEXIBLE DUCT CONNECTORS ARE USED, THEY SHALL BE EQUAL TO OR GREATER THAN CROSS-SECTIONAL AREA OF DUCTS SHOWN. FOR MAXIMUM ALLOWABLE LENGTH SEE SPECIFICATION SECTION 23 31 00, "DUCTWORK."
6. PROVIDE TURNING VANES IN ALL SQUARE ELBOWS. RADIUS ELBOWS WITHOUT TURNING VANES SHALL BE USED IN ALL EXHAUST AND RETURN DUCTS EXCEPT WHERE SHOWN OR NOTED ON DRAWINGS. WHERE SQUARE ELBOWS ARE SHOWN IN EXHAUST AND RETURN DUCTS, ACCESS DOORS SHALL BE PROVIDED IMMEDIATELY UPSTREAM OF VANES.
7. VOLUME DAMPERS SHALL BE INSTALLED IN ALL BRANCH SUPPLY AND EXHAUST OR RETURN DUCTS. LOCATE DAMPERS AS FAR AS POSSIBLE FROM OUTLETS.

C. PIPING

1. VERIFY EXACT INVERT ELEVATION OF POINTS OF CONNECTION TO EXISTING SERVICE PRIOR TO INSTALLATION OF NEW BRANCH, MAINS OR SERVICE RELOCATION.
2. PROVIDE A VALVED DRAIN AT THE LOW POINT IN EACH PIPING SYSTEM.
3. VENT ALL HIGH POINTS IN HEATING WATER AND CHILLED WATER PIPING AS SPECIFIED.
4. PROVIDE CONDENSATE DRIP TRAP ASSEMBLIES AT THE ENDS OF STEAM MAINS, BRANCHES, AND AT ALL LOW POINTS IN THE STEAM LINES.

SINGLE LINE DUCT LEGEND

NAME OF FITTING	SINGLE LINE PRESENTATION	DOUBLE LINE PRESENTATION: SUPPLY	DOUBLE LINE PRESENTATION: RETURN/EXHAUST
ROUND ELBOW			
MITERED ELBOW			
VELOCITY SPLIT			
VELOCITY SPLIT			
VERTICAL SPLIT			
VERTICAL SPLIT			
TAP-IN			NOT USED
TAP-IN			
TRANSITION (USUALLY-NOT SHOWN ON SINGLE LINE			

SYMBOLS

Some of the symbols shown may not be used on this project.

GENERAL

- EXISTING TO REMAIN
- TO BE REMOVED
- NEW WORK
- H — HUMIDISTAT
- H — HYGROMETER
- CO — CARBON MONOXIDE SENSOR
- CO_2 — CARBON DIOXIDE SENSOR
- THERMOSTAT
- POINT OF CONNECTION

TAGS

- EQ-# — EQUIPMENT TAG - TEXT ONLY
- EQ # — EQUIPMENT TAG
- EQ-# EQ-# — KITCHEN EQUIPMENT TAGS
- ABC # — PLUMBING RISER TAG
- # — SHEET NOTE TAG
- # — ALTERNATE SHEET NOTE TAGS
- CFM NECK (TYP.) TAG — DIFFUSER / GRILLE TAG

AIR BALANCE

- SA = 0 — SA CFM
- EA = 0 — EA CFM
- IAi = 0 — INCIDENTAL AIR IN CFM
- IAo= 0 — INCIDENTAL AIR OUT CFM
- Pr = NR — PRESSURE RELATIONSHIP
  - NR - NO REQUIREMENT FOR CONTINUOUS DIRECTIONAL CONTROL
  - P - POSITIVE
  - N - NEGATIVE
- Room # / CFM / CFM / NR, P, N
  - CFM — SUPPLY CFM
  - CFM — EXHAUST CFM
  - NR, P, N — PRESSURE (NOT REQUIRED, POSITIVE, NEGATIVE)

HVAC DUCTWORK

- REHEAT COIL
- FLEXIBLE CONNECTION - DUCT
- LINED DUCTWORK (DOUBLE LINE)
- LINED & LAGGED (DOUBLE LINE)
- LINED DUCTWORK (SINGLE LINE)
- LINED & LAGGED (SINGLE LINE)
- SUPPLY AIR DUCT RISER
- SUPPLY AIR DUCT DROP
- RETURN AIR DUCT RISER
- RETURN AIR DUCT DROP
- EXHAUST AIR DUCT RISER
- EXHAUST AIR DUCT DROP
- ROUND DUCT RISER
- ROUND DUCT DROP
- ACCESS DOOR
- ROUND DUCT
- SQUARE TO ROUND DUCT TRANSITION
- MD — MOTORIZED DAMPER
- VD — VOLUME DAMPER
- FDR — FIRE DAMPER
- FSDR — COMBINATION FIRE AND SMOKE DAMPER
- ROUND TO RECTANGULAR TAP
- FLEXIBLE DUCT - SINGLE LINE

SENSORS & SWITCHES

- FM — FLOW METER
- FS — FLOW SWITCH
- FS — FLOW SWITCH OR SENSOR
- PG — PRESSURE GAUGE
- PS — PRESSURE SWITCH OR SENSOR
- REGULATOR
- TS — TEMPERATURE SWITCH OR SENSOR
- TH — THERMOMETER
- VENTURI

SYMBOLS

Some of the symbols shown may not be used on this project.

PIPING & FITTINGS

- DIRECTION AND FLOW
- PIPE UP - TEE & ELBOW
- PIPE DOWN - TEE & ELBOW
- BJ — BALL JOINT
- CAP OR PLUGGED FITTING
- CO — CLEANOUT
- EJ — EXPANSION JOINT
- FLANGE
- FLEXIBLE CONNECTION
- PETE'S PLUG
- PIPE ANCHOR
- PIPE GUIDE
- POINT OF CONNECTION
- P-TRAP
- REDUCER
- STRAINER
- UNION

VALVES

- ANGLE OR STOP CHECK VALVE
- BFP — BACKFLOW PREVENTER
- RPBP — REDUCE PRESSURE BACKFLOW PREVENTER
- BV — BALANCING VALVE
- BLV — BALL VALVE
- BFV — BUTTERFLY VALVE
- CHECK VALVE
- CV — CONTROL VALVE, TWO WAY
- CV — CONTROL VALVE, THREE WAY
- GAS COCK
- GV — GATE VALVE
- GLV — GLOBE VALVE
- HB — HOSE BIBB
- NEEDLE VALVE
- PRV — PRESSURE REDUCING VALVE ASSEMBLY
- RELIEF VALVE
- SOLENOID VALVE

DRAINS & CLEANOUTS

- AD — AREA DRAIN
- FCO — FLOOR CLEANOUT
- FD — FLOOR DRAIN
- GCO — GRADE CLEANOUT
- PD — PLANTER DRAIN
- RD — ROOF DRAIN
- OF — OVERFLOW DRAIN
- RR — ROOF RECEPTOR
- FS — FLOOR SINK
- WCO — WALL CLEANOUT

DOMESTIC

- C — DOMESTIC COLD WATER
- H — DOMESTIC HOT WATER
- HWR — DOMESTIC HOT WATER RETURN
- G — NATURAL GAS
- L — LEADER (ARCHITECTURAL DOWNSPOUT, SEE ARCH. DWGS.)
- OF — OVERFLOW DRAIN
- SD — STORM DRAIN
- SS — SANITARY SEWER - EXPOSED
- SS — SANITARY SEWER - BELOW FLOOR
- V — VENT
- W — WASTE

HVAC PIPING

- CHR — CHILLED WATER RETURN
- CHS — CHILLED WATER SUPPLY
- CD — CONDENSATE DRAIN
- CWR — CONDENSER WATER RETURN
- CWS — CONDENSER WATER SUPPLY
- HR — HEATING HOT WATER RETURN
- HS — HEATING HOT WATER SUPPLY
- RHG — REFRIGERANT HOT GAS
- RL — REFRIGERANT LIQUID
- RS — REFRIGERANT SUCTION
- SCHR — SECONDARY CHILLED WATER RETURN
- SCHS — SECONDARY CHILLED WATER SUPPLY
- TCHR — TERTIARY CHILLED WATER RETURN
- TCHS — TERTIARY CHILLED WATER SUPPLY
- COIL VALVE STATION

PROCESS

- A(*) — COMPRESSED AIR (* = PSI)
- CO2 — CARBON DIOXIDE
- CS — DOMESTIC COLD WATER (SOFT)
- DE — DEIONIZED WATER
- DI — DISTILLED WATER
- EO — EHTYLENE OXIDE
- EOV — EHTYLENE OXIDE VENT
- FO — FUEL OIL
- FOR — FUEL OIL RETURN
- FOS — FUEL OIL SUPPLY
- FOV — FUEL OIL VENT
- EVAC — GAS EVACUATION
- HE — HELIUM
- IRRW — IRRIGATION WATER
- LPG — LIQUID PETROLIUM GAS
- N2 — NITROGEN
- NO2 — NITROUS OXIDE
- NW — NON-POTABLE WATER
- O2 — OXYGEN
- PD — PUMP DISCHARGE
- PR — PUMP RETURN
- PW — PUMP WASTE
- VAC — VACUUM
- VV — VAPOR VENT

FIRE PROTECTION

- F — FIRE MAIN
- SP — FIRE SPRINKLER
- DSP — DRY STANDPIPE
- WSP — WET STANDPIPE

PUMPS

- PUMP - 01 FAN
- PUMP - 01 FAN

STEAM

- CR — CONDENSATE RETURN
- HPR — HIGH PRESSURE CONDENSATE RETURN
- HPS — HIGH PRESSURE STEAM
- MPR — MEDIUM PRESSURE CONDENSATE RETURN
- MPS — MEDIUM PRESSURE STEAM
- LPR — LOW PRESSURE CONDENSATE RETURN
- LPS — LOW PRESSURE STEAM
- SV — STEAM VENT

MECHANICAL LEGEND

(SOME OF THE ABBREVIATIONS AND SYMBOLS SHOWN MAY NOT BE USED ON THIS PROJECT.)

A(*)	COMPRESSED AIR (*PSI WHERE REQUIRED)
AD	AREA DRAIN
AFF	ABOVE FINISHED FLOOR
AP	ACCESS PANEL
AV	ACID VENT
AVTR	ACID VENT THRU ROOF
AW	ACID WASTE
BD	BOILER BLOW DOWN
BF	BOILER FEED
BFP	BACKFLOW PREVENTER
BFV	BUTTERFLY VALVE
BHP	BRAKE HORSEPOWER / BOILER HORSEPOWER
BLDG	BUILDING
BLV	BALL VALVE
BMS	BUILDING MANAGEMENT SYSTEM
BOD	BOTTOM OF DUCT
BT	BATH TUB
BV	BALANCING VALVE
BMW	BACKWATER VALVE
C	DOMESTIC COLD WATER
CC	COOLING COIL
CD	CONDENSATE DRAIN
CF	CHEMICAL FEED
CFF	CAP FOR FUTURE
CFH	CUBIC FEET PER HOUR
CFM	CUBIC FEET PER MINUTE
CO2	CARBON DIOXIDE (CO_2)
CHEM	CHEMICAL TREATMENT
CHET	CHILLED WATER EXPANSION TANK
CHR	CHILLED WATER RETURN
CHS	CHILLED WATER SUPPLY
CI	CAST IRON
CLG	CEILING
CO	CLEANOUT
COND	CONDENSER / CONDENSING / CONDENDATE
CP	CHROMEPLATED
CPVC	CHLORINATED POLYVINYL CHLORIDE
CRP	CONDENSATE RETURN PUMP
CS	DOMESTIC COLD WATER (SOFT)
CSK	CLINICAL SINK
CTE	CONNECT TO EXISTING
CTP	COOLING TOWER PUMP
CV	CONTROL VALVE
CWR	CONDENSER WATER RETURN
CWS	CONDENSER WATER SUPPLY
DB	DRY BULB TEMPERATURE
DE	DEIONIZED WATER
DF	DRINKING FOUNTAIN
DI	DISTILLED WATER
DL	DOOR LOUVER
DN	DOWN
DR	DRAIN
DSP	DRY STANDPIPE
DT	DRIP TRAP
DWG	DRAWING
(E)	EXISTING
EA	EXHAUST AIR
EAT	ENTERING AIR TEMPERATURE
ED	EXTRACTION DAMPER
EF	EXHAUST FAN
EJ	EXPANSION JOINT
EL	ELEVATION
ENT	ENTERING
EO	ETHYLENE OXIDE
EOV	ETHYLENE OXIDE VENT
ESP	EXTERNAL STATIC PRESSURE
EVAC	GAS EVACUATION
EWT	ENTERING WATER PRESSURE
EXH	EXHAUST
FA	FACE AERA
FC	FLEXIBLE CONNECTION
FCO	FLOOR CLEANOUT
FD	FLOOR DRAIN
FDC	FIRE DEPARTMENT CONNECTION
FDR	FIRE DAMPER
FE	FIRE EXTINGUISHER
FEC	FIRE EXTINGUISHER CABINET
FH	FIRE HYDRANT
FHC	FIRE HOSE CABINET
FIN	FINISHED
FL	FIRE LINE
FLG	FLANGE
FLR	FLOOR
FM	FLOW METER
FO	FUEL OIL
FOF	FUEL OIL FILL
FOG	FUEL OIL GAUGE
FOR	FUEL OIL RETURN
FOS	FUEL OIL SUPPLY
FOV	FUEL OIL VENT
FPM	FEET PER MINUTE
FS	FLOW SWITCH
FSDR	COMBINATION FIRE AND SMOKE DAMPER
FSK	FLOOR SINK
FTT	FLOAT AND THERMOSTAT TRAP
FUT	FUTURE
G	NATURAL GAS
GA	GAUGE
GCO	GRADE CLEANOUT
GI	GALVANIZED IRON
GLV	GLOBE VALVE
GPH	GALLONS PER HOUR
GR	GRADE
GV	GATE VALVE
H(*)	DOMESTIC HOT WATER (*TEMP. WHERE REQ'D.)
HB	HOSE BIBB
HC	HEATING COIL
HE	HELIUM
HET	HOT WATER EXPANSION TANK
HPDT	HIGH PRESSURE DRIP TRAP
HPR	HIGH PRESSURE CONDENSATE RETURN
HPS	HIGH PRESSURE STEAM
HR	HEATING HOT WATER RETURN
HS	HEATING HOT WATER SUPPLY
HTG	HEATING
HU	HUMIDIFIER
HV	HEATING AND VENTILATING
HVAC	HEATING VENTILATING AND AIR CONDITIONING
HWR	DOMESTIC HOT WATER RETURN
HZ	HERTZ
ID	INSIDE DIAMETER
IE	INVERT ELEVATION
IFS	IN FURRED SPACE
IPS	IRON PIPE SIZE
IRRW	IRRIGATION WATER
IW	INDIRECT WASTE
L	RAINWATER
LA	LABORATORY COMPRESSED AIR
LAT	LEAVING AIR TEMPERATURE / LATENT
LP	LOW PRESSURE
LPDT	LOW PRESSURE DRIP TRAP
LPG	LIQUID PETROLEUM GAS
LPR	LOW PRESSURE CONDENSATE RETURN
LPS	LOW PRESSURE STEAM
LV	LAVATORY
LVG	LEAVING
LWCO	LOW WATER CUT-OFF
LWT	LEAVING WATER TEMPERATURE
MA	MEDICAL COMPRESSED AIR / MAIN AIR
MBH	THOUSAND BRITISH THERMAL UNITS PER HOUR
MCC	MOTOR CONTROL CENTER
MD	MOTORIZED DAMPER
MFR	MANUFACTURER
MG	MEDICAL GAS
MGA	MEDICAL GAS ALARM
MPDT	MEDIUM PRESSURE DRIP TRAP
MPR	MEDIUM PRESSURE CONDENSATE RETURN
MPS	MEDIUM PRESSURE STEAM
(N)	NEW
N2	NITROGEN (N_2)
NC	NORMALLY CLOSED
NFPA	NATIONAL FIRE PROTECTION ASSOCIATION
NO	NORMALLY OPEN
N2O	NITROUS OXIDE (N_2O)
NTS	NOT TO SCALE
NW	NON-POTABLE WATER
O2	OXYGEN (O_2)
OA	OUTSIDE AIR
OD	OUTSIDE DIMENSION
OSY	OUTSIDE STEM AND YOKE
OV	OUTLET VELOCITY
PCHS	PRIMARY CHILLED WATER SUPPLY
PCHR	PRIMARY CHILLED WATER RETURN
PD	PUMP DISCHARGE / PRESSURE DROP
PFF	PLUG FOR FUTURE
PG	PRESSURE GAUGE
PIV	POST INDICATOR VALVE
PLBG	PLUMBING
PR	PUMP RETURN
PRV	PRESSURE REDUCING VALVE
PSI	POUNDS PER SQUARE INCH
PSIG	POUNDS PER SQUARE INCH GAUGE
PTS	PNEUMATIC TUBE SYSTEM
PW	PUMP WAST
RA	RETURN AIR
RD	ROOF DRAIN
RF	RETURN FAN
RH	RELATIVE HUMIDITY
RHG	REFRIGERANT HOT GAS
RIC	ROUGH IN AND CONNECT
RIO	ROUGH IN ONLY
RL	REFRIGERANT LIQUID
RPBP	REDUCED PRESSURE BACKFLOW PREVENTER
RPM	REVOLUTIONS PER MINUTE
RS	REFRIGERANT SUCTION
RV	RELIEF VENT/ROOF VENTILATOR
RVV	RELIEF VALVE VENT
SA	SUPPLY AIR/SHOCK ARRESTOR
SB	STZ BATH
SCHS	SECONDARY CHILLED WATER SUPPLY
SCHR	SECONDARY CHILLED WATER RETURN
SD	SIGHT DRAIN/SMOKE DETECTOR
SDR	SMOKE DAMPER
SF	SUPPLY FAN
SH	SHOWER
SK	SINK
SM	SHEET METAL
SP	FIRE SPRINKLER
SPD	SPRINKLER DRAIN
SS	STAINLESS STEEL
SSD	SUBSURFACE DRAIN
SSL	SERVICE SINK
ST	STEAM TRAP
STD	STANDARD
STL	STEEL
STR	SOUND TRAP
SV	STEAM VENT
SW	SPECIAL WASTE
TCS	TEMPERATURE CONTROL AIR
TCV	TEMPERATURE CONTROL VALVE
TCHS	TERTIARY CHILLED WATER SUPPLY
TCHR	TERTIARY CHILLED WATER RETURN
TD	TRENCH DRAIN
TH	THERMOMETER
TR	TONS OF REFRIGERATION
TS	TIP SPEED
TSP	TOTAL STATIC PRESSURE
TV	TURNING VANES
UR	URINAL
V	SANITARY VENT
VAC	MEDICAL VACUUM
VB	VACUUM BREAKER
VCP	VITRIFIED CLAY PIPE
VD	VOLUME DAMPER
VEL	VELOCITY
VTR	VENT THRU ROOF
V V	VAPOR VENT
W	WASTE
WB	WET BULB TEMPERATURE
WC	WATER CLOSET
WCO	WALL CLEANOUT
WP	WEATHER OR WATER PROOF
WSP	WET STAND PIPE
WT	WEIGHT

els architecture+ urban design
2040 Addison St, Berkeley, CA 94704
510.549.2929 | elsarch.com

PROJECT:

PIEDMONT COMMUNITY POOL

777 MAGNOLIA AVENUE PIEDMONT, CA 94611

CLIENT:

CITY OF PIEDMONT

120 VISTA AVENUE PIEDMONT, CA 94611

PROJECT TEAM:

ARCHITECT:
ELS ARCHITECTURE AND URBAN DESIGN
2040 Addison Street
Berkeley, CA 94704
P: 510.549.2929

CIVIL ENGINEER:
BKF ENGINEERS
4670 Willow Road, Suite 250
Pleasanton, CA 94588
P: (925) 396-7704

LANDSCAPE ARCHITECT:
SWA
2200 Bridgeway
Sausalito, CA 94965
P: 415.332.5100

STRUCTURAL ENGINEER:
FORELL/ELSESSER ENGINEERS, INC.
160 Pine Street, 6th Floor
San Francisco, CA 94111
P: 415.837.0700

MEP / FIRE PROTECTION:
GUTTMANN & BLAEVOET
1620 Montgomery Street, Suite 230
San Francisco, CA 94111
P: 415.655.4000

AQUATICS:
AQUATICS DESIGN GROUP
2226 Faraday Avenue
Carlsbad, CA 92008
P: 760.438.8400

SPECIFICATIONS
TOPFLIGHT SPECS
49 Geary Street, Suite 230
San Francisco, CA 94108-5748
P: 415.546.6033

REVISION

NUMBER	DATE	DESCRIPTION

ISSUE:
100% DESIGN DEVELOPMENT

DATE:
APRIL 30, 2022

STAMP:

NOT FOR CONSTRUCTION

SHEET TITLE:

LEGEND, SYMBOLS, GENERAL NOTES & DRAWING LIST

SHEET NUMBER:

M001

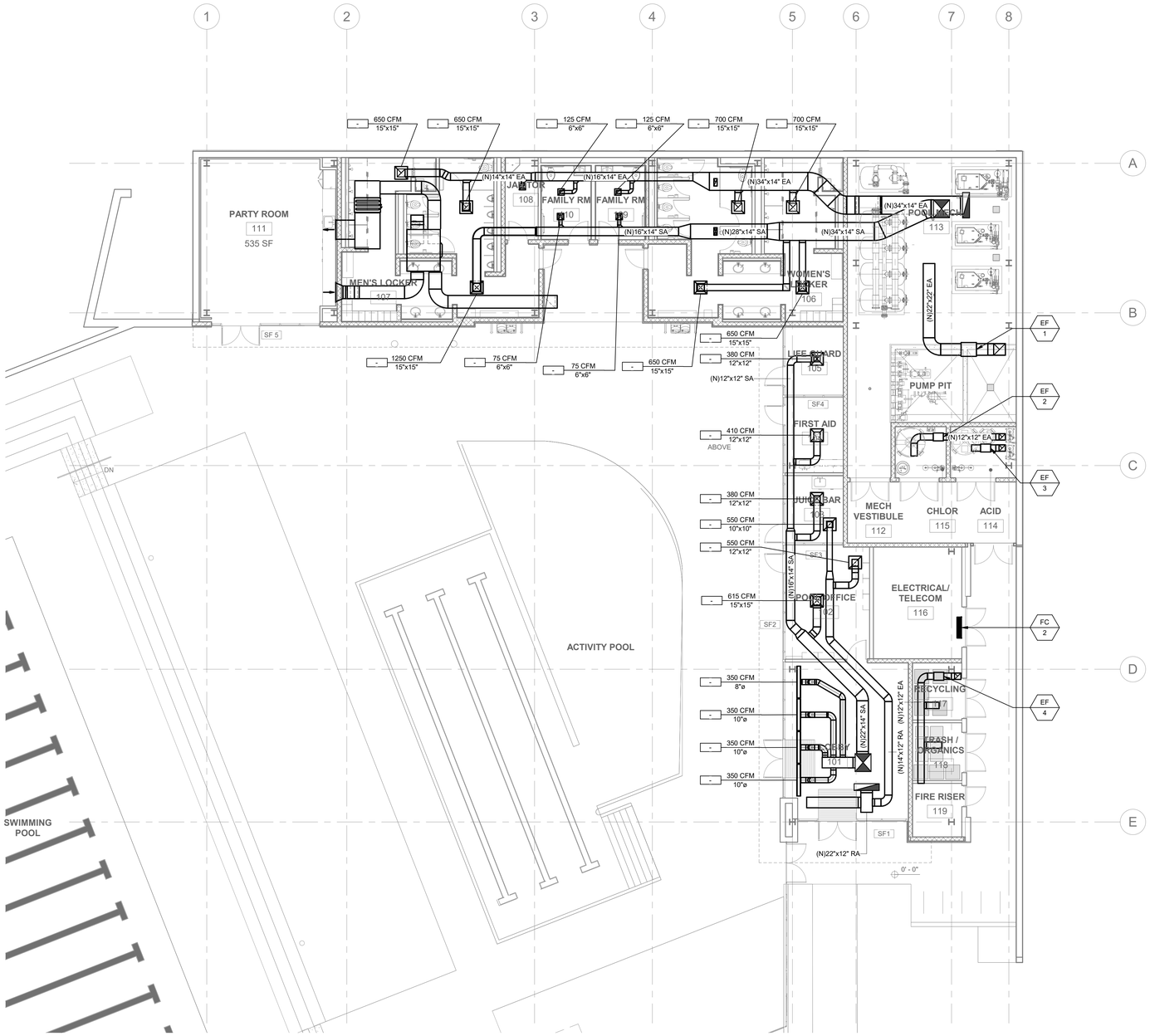

1 FLOOR PLAN - LEVEL 1 - HVAC
1/8" = 1'-0"

KEYNOTES #

GENERAL NOTES

els architecture+ urban design
2040 Addison St, Berkeley, CA 94704
510.549.2929 | elsarch.com

PROJECT:

PIEDMONT COMMUNITY POOL

777 MAGNOLIA AVENUE PIEDMONT, CA 94611

CLIENT:

CITY OF PIEDMONT

120 VISTA AVENUE PIEDMONT, CA 94611

PROJECT TEAM:

ARCHITECT:
ELS ARCHITECTURE AND URBAN DESIGN
2040 Addison Street
Berkeley, CA 94704
P: 510.549.2929

CIVIL ENGINEER:
BKF ENGINEERS
4670 Willow Road, Suite 250
Pleasanton, CA 94588
P: (925) 396-7704

LANDSCAPE ARCHITECT:
SWA
2200 Bridgeway
Sausalito, CA 94965
P: 415.332.5100

STRUCTURAL ENGINEER:
FORELL/ELSESSER ENGINEERS, INC.
160 Pine Street, 6th Floor
San Francisco, CA 94111
P: 415.837.0700

MEP / FIRE PROTECTION:
GUTTMANN & BLAEVOET
1620 Montgomery Street, Suite 230
San Francisco, CA 94111
P: 415.655.4000

AQUATICS:
AQUATICS DESIGN GROUP
2226 Faraday Avenue
Carlsbad, CA 92008
P: 760.438.8400

SPECIFICATIONS
TOPFLIGHT SPECS
49 Geary Street, Suite 230
San Francisco, CA 94108-5748
P: 415.546.6033

REVISION

NUMBER	DATE	DESCRIPTION

ISSUE:
100% DESIGN DEVELOPMENT

DATE:
APRIL 30, 2022

STAMP:

NOT FOR CONSTRUCTION

SHEET TITLE:
FLOOR PLAN - LEVEL 1 - HVAC

SHEET NUMBER:
M201

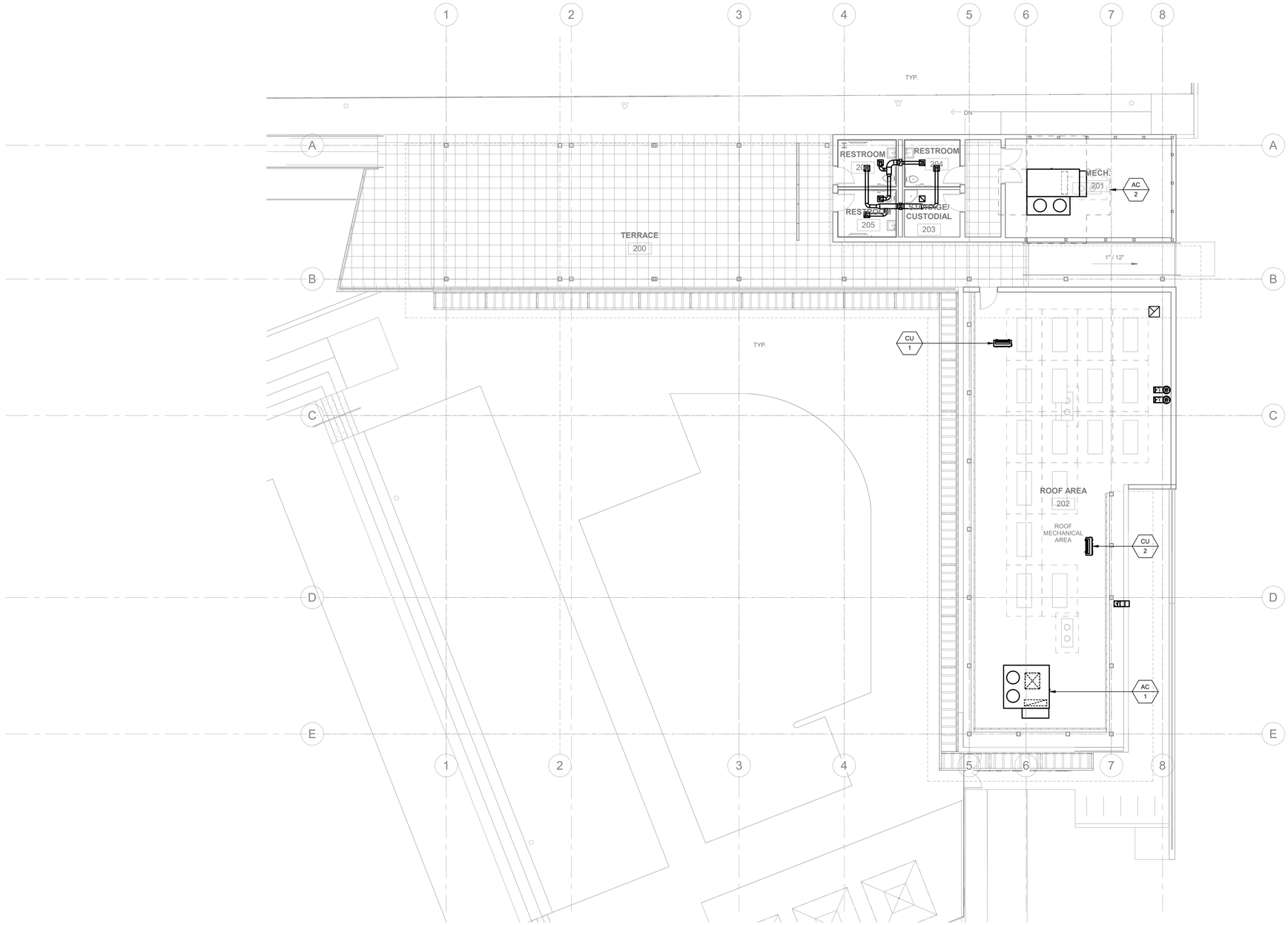

1 HIGH ROOF PLAN - HVAC
1/8" = 1'-0"

KEYNOTES #

GENERAL NOTES

els architecture+ urban design
2040 Addison St, Berkeley, CA 94704
510.549.2929 | elsarch.com

PROJECT:

PIEDMONT COMMUNITY POOL

777 MAGNOLIA AVENUE PIEDMONT, CA 94611

CLIENT:

CITY OF PIEDMONT

120 VISTA AVENUE PIEDMONT, CA 94611

PROJECT TEAM:

ARCHITECT:
ELS ARCHITECTURE AND URBAN DESIGN
2040 Addison Street
Berkeley, CA 94704
P: 510.549.2929

CIVIL ENGINEER:
BKF ENGINEERS
4670 Willow Road, Suite 250
Pleasanton, CA 94588
P: (925) 396-7704

LANDSCAPE ARCHITECT:
SWA
2200 Bridgeway
Sausalito, CA 94965
P: 415.332.5100

STRUCTURAL ENGINEER:
FORELL/ELSESSER ENGINEERS, INC.
160 Pine Street, 6th Floor
San Francisco, CA 94111
P: 415.837.0700

MEP / FIRE PROTECTION:
GUTTMANN & BLAEVOET
1620 Montgomery Street, Suite 230
San Francisco, CA 94111
P: 415.655.4000

AQUATICS:
AQUATICS DESIGN GROUP
2226 Faraday Avenue
Carlsbad, CA 92008
P: 760.438.8400

SPECIFICATIONS
TOPFLIGHT SPECS
49 Geary Street, Suite 230
San Francisco, CA 94108-5748
P: 415.546.6033

REVISION

NUMBER	DATE	DESCRIPTION

ISSUE:
100% DESIGN DEVELOPMENT

DATE:
APRIL 30, 2022

STAMP:

NOT FOR CONSTRUCTION

SHEET TITLE:
ROOF PLAN - HVAC

SHEET NUMBER:

M205

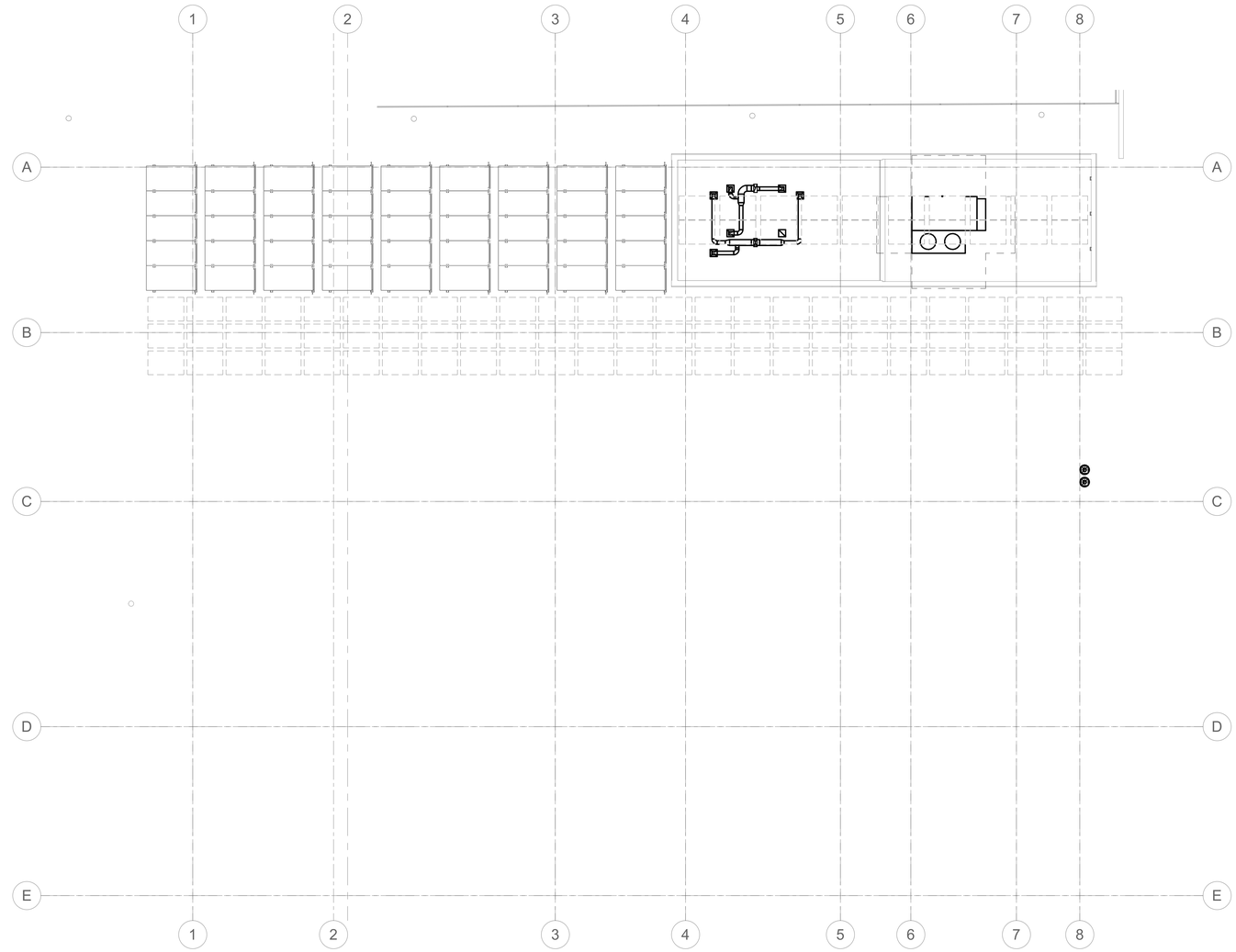

1 HIGH ROOF PLAN - HVAC
1/8" = 1'-0"

PLAN NORTH

KEYNOTES #	GENERAL NOTES

els architecture+ urban design
2040 Addison St, Berkeley, CA 94704
510.549.2929 | elsarch.com

PROJECT:

PIEDMONT COMMUNITY POOL

777 MAGNOLIA AVENUE PIEDMONT, CA 94611

CLIENT:

CITY OF PIEDMONT

120 VISTA AVENUE PIEDMONT, CA 94611

PROJECT TEAM:

ARCHITECT:
ELS ARCHITECTURE AND URBAN DESIGN
2040 Addison Street
Berkeley, CA 94704
P: 510.549.2929

CIVIL ENGINEER:
BKF ENGINEERS
4670 Willow Road, Suite 250
Pleasanton, CA 94588
P: (925) 396-7704

LANDSCAPE ARCHITECT:
SWA
2200 Bridgeway
Sausalito, CA 94965
P: 415.332.5100

STRUCTURAL ENGINEER:
FORELL/ELSESSER ENGINEERS, INC.
160 Pine Street, 6th Floor
San Francisco, CA 94111
P: 415.837.0700

MEP / FIRE PROTECTION:
GUTTMANN & BLAEVOET
1620 Montgomery Street, Suite 230
San Francisco, CA 94111
P: 415.655.4000

AQUATICS:
AQUATICS DESIGN GROUP
2226 Faraday Avenue
Carlsbad, CA 92008
P: 760.438.8400

SPECIFICATIONS
TOPFLIGHT SPECS
49 Geary Street, Suite 230
San Francisco, CA 94108-5748
P: 415.546.6033

REVISION

NUMBER	DATE	DESCRIPTION

ISSUE:
100% DESIGN DEVELOPMENT

DATE:
APRIL 30, 2022

STAMP:

NOT FOR CONSTRUCTION

SHEET TITLE:
HIGH ROOF PLAN - HVAC

SHEET NUMBER:

M206

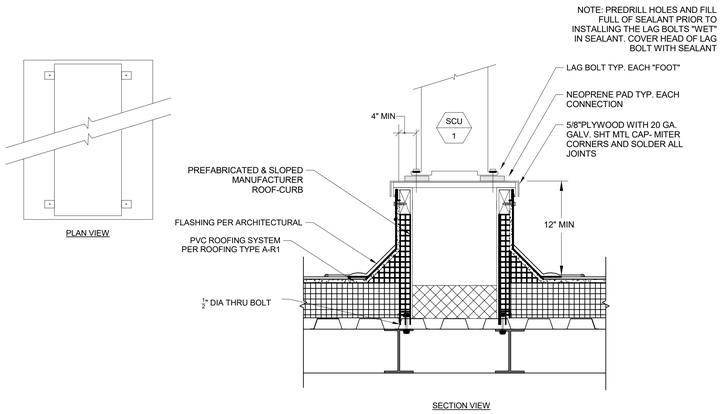

4 SCU-1 MOUNTING DETAIL
NO SCALE

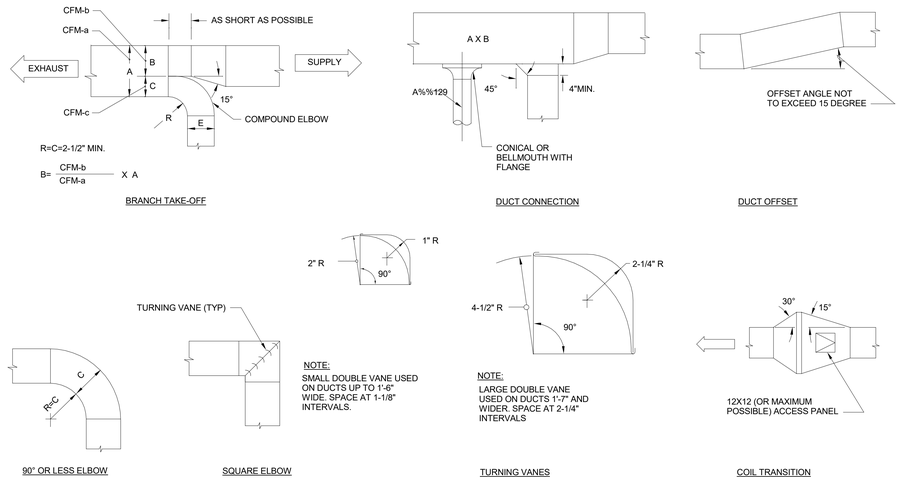

1 LOW VELOCITY DUCT CONSTRUCTION DETAILS
NO SCALE

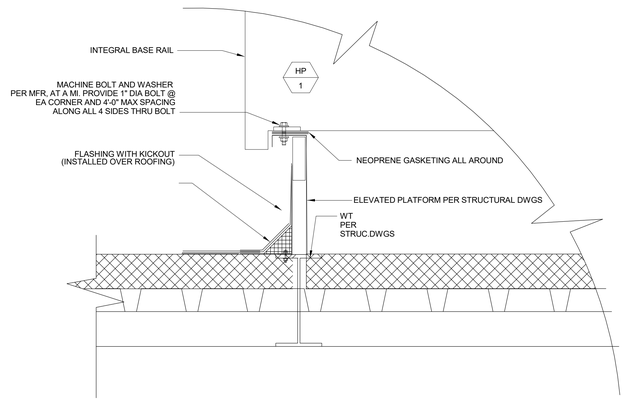

5 HP-01 MOUNTING DETAIL
NO SCALE

NOTES

A. ALL PIPES ENTERING THE PIPE ENCLOSURE ASSEMBLY SHALL BE SLOPED UPWARD AS THEY ENTER THE FLASHING SO THAT WATER WILL NOT BE ABLE TO RUN INTO THE BUILDING.

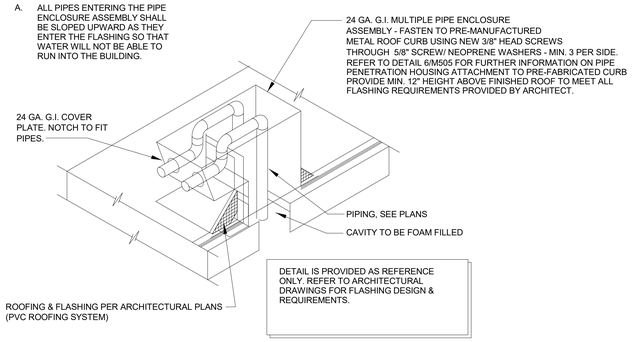

2 PIPE PENETRATION THROUGH ROOF DETAIL
NO SCALE

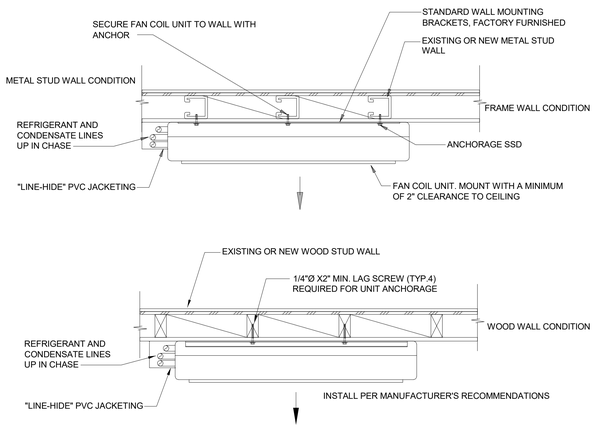

2 WALL MOUNTED FAN COIL MOUNTING DETAIL (FC-01 THRU FC-04)
NOT TO SCALE

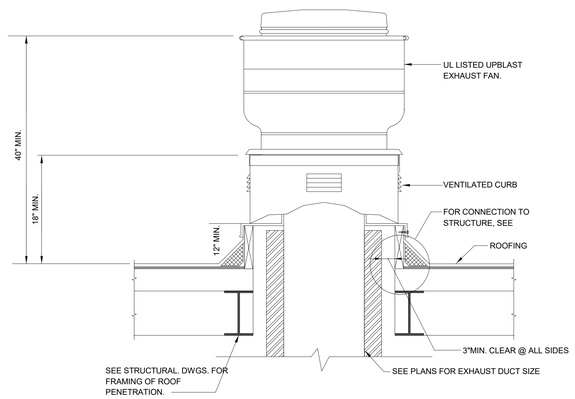

NOTE:
1. MAINTAIN 6" MIN. CLEARANCE ALL AROUND FAN AND 36" IN FRONT OF DISCONNECT.

3 UPBLAST EXHAUST FAN ROOF CURB
NO SCALE

els architecture+ urban design
2040 Addison St, Berkeley, CA 94704
510.549.2929 | elsarch.com

PROJECT:

PIEDMONT COMMUNITY POOL

777 MAGNOLIA AVENUE PIEDMONT, CA 94611

CLIENT:

CITY OF PIEDMONT

120 VISTA AVENUE PIEDMONT, CA 94611

PROJECT TEAM:

ARCHITECT:
ELS ARCHITECTURE AND URBAN DESIGN
2040 Addison Street
Berkeley, CA 94704
P: 510.549.2929

CIVIL ENGINEER:
BKF ENGINEERS
4670 Willow Road, Suite 250
Pleasanton, CA 94588
P: (925) 396-7704

LANDSCAPE ARCHITECT:
SWA
2200 Bridgeway
Sausalito, CA 94965
P: 415.332.5100

STRUCTURAL ENGINEER:
FORELL/ELSESSER ENGINEERS, INC.
160 Pine Street, 6th Floor
San Francisco, CA 94111
P: 415.837.0700

MEP / FIRE PROTECTION:
GUTTMANN & BLAEVOET
1620 Montgomery Street, Suite 230
San Francisco, CA 94111
P: 415.655.4000

AQUATICS:
AQUATICS DESIGN GROUP
2226 Faraday Avenue
Carlsbad, CA 92008
P: 760.438.8400

SPECIFICATIONS
TOPFLIGHT SPECS
49 Geary Street, Suite 230
San Francisco, CA 94108-5748
P: 415.546.6033

REVISION

NUMBER	DATE	DESCRIPTION

ISSUE:
100% DESIGN DEVELOPMENT

DATE:
APRIL 30, 2022

STAMP:

NOT FOR CONSTRUCTION

SHEET TITLE:
DETAILS

SHEET NUMBER:
M401

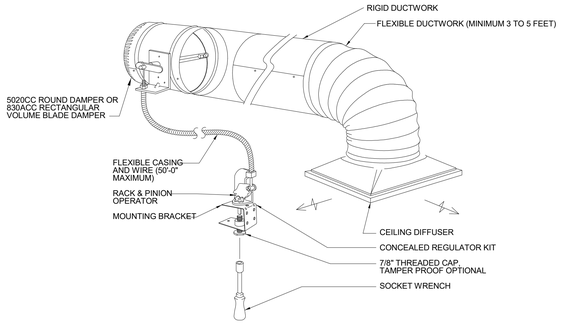

270-896 BOWDEN CABLE CONTROL SYSTEM

NOTE:

1) COORDINATE EXACT LOCATION OF CEILING MOUNTED CONCEALED REGULATOR WITH ARCHITECT PRIOR TO INSTALLATION.
2) THE 270-896 BOWDEN CABLE CONTROL SYSTEM IS DESIGNED TO BE IMBEDDED IN THE CEILING FLUSH WITH THE FINISHED SURFACE.
3) CABLE SHALL CONSIST OF BOWDEN CABLE 0.054" STAINLESS STEEL CONTROL WIRE ENCAPSULATED IN 1/16" FLEXIBLE GALVANIZED SPIRAL WIRE SHEATH.
4) LOCKING RACK AND PINION GEAR DRIVE SHALL BE CONSTRUCTED OF 14 GAUGE STEEL AND SHALL BE USED TO CONVERT ROTARY MOTION INTO PUSH-PULL MOTION.
5) CONTROL SHAFT SHALL BE "D"-STYLE FLATTENED 1/4" DIAMETER WITH 265° ROTATION PROVIDING 1-1/2" LINEAR TRAVEL CAPABILITY.

6 / - REMOTE DAMPER CABLE CONTROL OPERATOR DETAIL

NOT TO SCALE

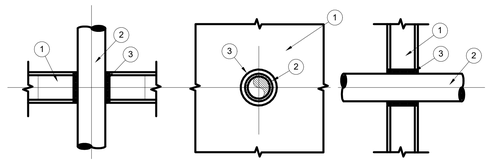

PACK SPACE BETWEEN PIPING/DUCT AND PENETRATION OPENING WITH MATERIAL APPROVED BY UNDERWRITERS LABORATORIES FOR THROUGH PENETRATION FIRE STOP SYSTEMS. MATERIALS, METHODS, AND INSTALLATION SHALL BE IN ACCORDANCE WITH UL APPROVED LISTING AND SHALL BE DESIGNED TO ACT AS FIRE STOP AS WELL AS A COLD SMOKE, NOXIOUS GAS AND WATER SEALANT WHERE REQUIRED SUBMIT LISTING NUMBERS AND DETAILS FROM UL FIRE RESISTANT DIRECTORY FOR ALL SUCH SYSTEMS TO BE USED. INSULATE PIPES 3 FEET TO EITHER SIDE OF PENETRATION WITH MATERIAL SPECIFIED IN THE UL FIRE RESISTANT DIRECTORY IF REQUIRED WITH MATERIAL TO OBTAIN THE T- AND F- RATINGS.

AND WASHERS.

1. WALL & FLOOR
2. PIPE OR INSULATED PIPE, DUCT OR INSULATED DUCT.
3. FIRE BARRIER - UL LISTED, FM APPROVED FIRE BARRIER CAULK.

USE FOLLOWING APPLICABLE UL SYSTEMS FOR THE CONSTRUCTION TYPES LISTED:

CONSTRUCTION TYPE	THROUGH-PENETRATION FIRESTOP SYSTEM NUMBERS	
	"F" RATING	"F" & "T" RATING
CONCRETE FLOORS	CAJ 1002, CAJ 1025, CAJ 8008, FA 1003	CAJ 1008, CAJ 1020, CAJ 1029, CAJ 5029, CAJ 5001, CAJ 5031, FA 1004, FA 1005, CBJ 8012
CONCRETE OR MASONARY WALLS	CAJ 1002, CAJ 1012, CAJ 1025, CAJ 8008	CAJ 1008, CAJ 1020, CAJ 1029, CAJ 5029, CAJ 5001, CAJ 5031,
GYPSUM WALL BOARD/ STUD WALLS	WL 1002, WL 1054 WL 7001	WL 1001, WL 5001, WL 5002, WL 7008

7 / - PIPE/DUCT PENETRATION THROUGH FIRE RATED BARRIER DETAIL

NO SCALE

SHEET NOTE:

SEISMIC AND BRACING INFORMATION IS PROVIDED AS REFERENCE ONLY. DESIGN WILL BE VERIFIED THROUGH THE SUBMITTAL PROCESS AS A DEFERRED APPROVAL.

CONTRACTOR TO PROVIDE SHOP DRAWINGS AND STRUCTURAL CALCULATIONS BY A LICENSED STRUCTURAL ENGINEER FOR SEISMIC SUPPORT SYSTEMS.

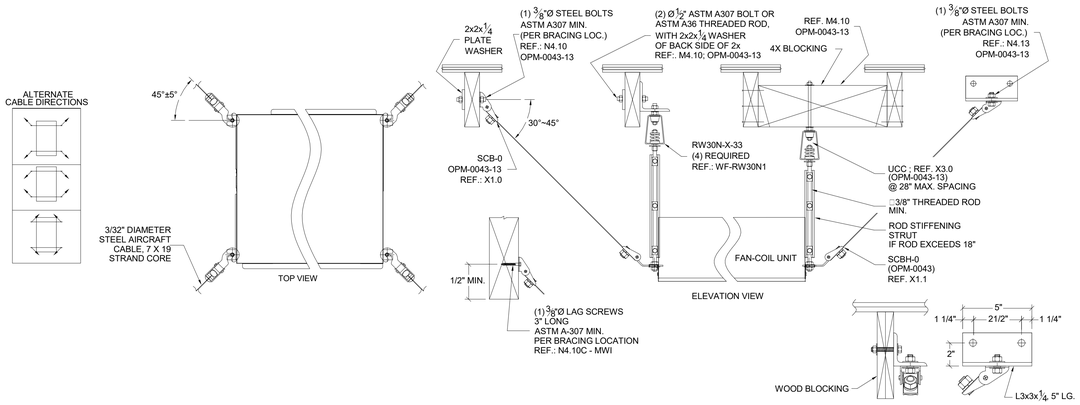

1 / - FAN COIL SUPPORT DETAIL (FC-05 THRU FC-09)

NO SCALE

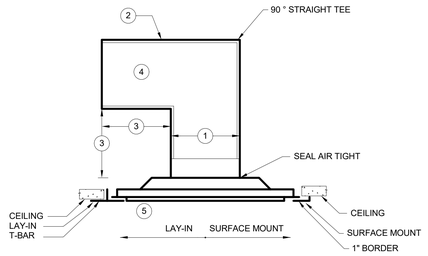

NOTE:

1. MINIMUM DIMENSION = DUCT SIZE = NOMINAL DIFFUSER NECK SIZE.(22"X22")
2. 2" FIBER FREE ACOUSTICALLY LINED GALVANIZED SHEET METAL DUCT
3. MINIMUM DIMENSION = 12"
4. HORIZONTAL DUCT (22"X12") RUN SHALL BE PARALLEL TO HALLWAY
5. CE-1 DIFFUSER (TYP)

THIS DETAIL IS APPLICABLE FOR BID ALT. #7. SEE DWG. G-002 FOR BID ALTERNATES NOTES.

4 / – TRANSFER DIFFUSER

NO SCALE

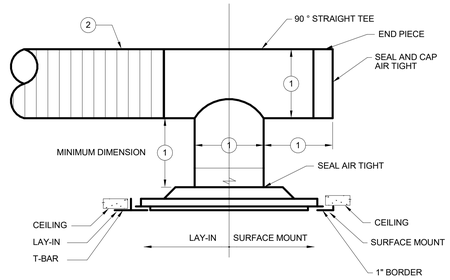

NOTE:

1. MINIMUM DIMENSION = DUCT SIZE = NOMINAL DIFFUSER NECK SIZE.
2. GALVANIZED SHEET METAL DUCT OR FLEXIBLE DUCT AS PER CONTRACT DOCUMENTS.
3. FLEX DUCT LENGTH SHALL NOT EXCEED 5'. FLEX DUCTS SHALL NOT BE USED IN LIEU OF ELBOW FITTINGS.

2 / – CEILING DIFFUSER DUCT CONNECTION

NO SCALE

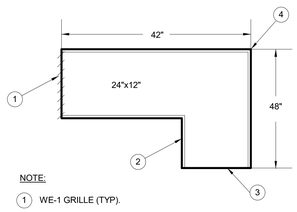

NOTE:

1. WE-1 GRILLE (TYP).
2. 2" FIBER-FREE ACOUSTICALLY LINED GALVANIZED SHEET METAL DUCT.
3. PROVIDE 1/2" GALVANIZED MESH SCREEN
4. DUCT IN CEILING SPACE.

5 / – TRANSFER AIR DUCT DETAIL

NO SCALE

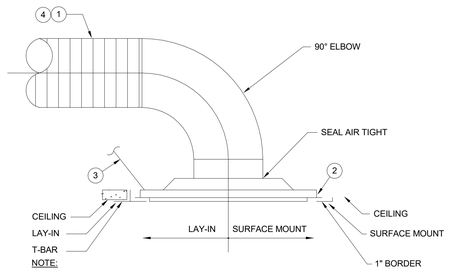

NOTE:

1. GALVANIZED SHEET METAL DUCT OR FLEXIBLE DUCT AS PER CONTRACT DOCUMENTS.
2. CEILING MOUNTED DIFFUSERS/GRILLES WEIGHING LESS THAN 20 POUNDS SHALL BE POSITIVELY ATTACHED USING SHEET METAL SCREWS. PROVIDE A MIN. (2) SCREWS ON EACH SIDE OF THE DIFFUSER/GRILLE, NEAR THE CORNERS, AND FASTENED INTO THE MAIN RUNNERS.
3. CEILING MOUNTED DIFFUSERS/GRILLES WEIGHING 20 LBS. BUT NOT MORE THAN 56 POUNDS SHALL BE POSITIVELY ATTACHED USING SHEET METAL SCREWS. PROVIDE A MIN. (2) SCREWS ON EACH SIDE OF THE DIFFUSER/GRILLE, NEAR THE CORNERS, AND FASTENED INTO THE MAIN RUNNERS. IN ADDITION DIFFUSERS/GRILLES SHALL HAVE (2) #12-GAGE HANGERS CONNECTED FROM THE DIFFUSER/GRILLE TO THE CEILING SYSTEM HANGERS OR TO THE STRUCTURE ABOVE. WIRES SHALL BE INSTALLED WITH LIMITED SLACK.
4. FLEX DUCT LENGTH SHALL NOT EXCEED 5'. FLEX DUCTS SHALL NOT BE USED IN LIEU OF ELBOW FITTINGS.

3 / – CEILING DIFFUSER/GRILLE DUCT CONNECTION DETAIL

NO SCALE

els architecture+ urban design
2040 Addison St, Berkeley, CA 94704
510.549.2929 | elsarch.com

PROJECT:

PIEDMONT COMMUNITY POOL

777 MAGNOLIA AVENUE PIEDMONT, CA 94611

CLIENT:

CITY OF PIEDMONT

120 VISTA AVENUE PIEDMONT, CA 94611

PROJECT TEAM:

ARCHITECT:
ELS ARCHITECTURE AND URBAN DESIGN
2040 Addison Street
Berkeley, CA 94704
P: 510.549.2929

CIVIL ENGINEER:
BKF ENGINEERS
4670 Willow Road, Suite 250
Pleasanton, CA 94588
P: (925) 396-7704

LANDSCAPE ARCHITECT:
SWA
2200 Bridgeway
Sausalito, CA 94965
P: 415.332.5100

STRUCTURAL ENGINEER:
FORELL/ELSESSER ENGINEERS, INC.
160 Pine Street, 6th Floor
San Francisco, CA 94111
P: 415.837.0700

MEP / FIRE PROTECTION:
GUTTMANN & BLAEVOET
1620 Montgomery Street, Suite 230
San Francisco, CA 94111
P: 415.655.4000

AQUATICS:
AQUATICS DESIGN GROUP
2226 Faraday Avenue
Carlsbad, CA 92008
P: 760.438.8400

SPECIFICATIONS
TOPFLIGHT SPECS
49 Geary Street, Suite 230
San Francisco, CA 94108-5748
P: 415.546.6033

REVISION

NUMBER	DATE	DESCRIPTION

ISSUE:
100% DESIGN DEVELOPMENT

DATE:
APRIL 30, 2022

STAMP:

NOT FOR CONSTRUCTION

SHEET TITLE:
DETAILS

SHEET NUMBER:
M402

PACKAGED HEAT PUMP AIR CONDITIONING UNIT SCHEDULE

TAG	AREA SERVING	MANUFACTURER	MODEL NO.	NOMINAL COOLING CAPACITY (TONS)	EAT/SAT (F)	NOMINAL HEATING CAPACITY (MBH)	SUPPLY FAN					ELECTRICAL DATA			EER/IEER	UNIT WEIGHT (LBS)	ROOF CURB WEIGHT (LBS)	REMARKS
							CFM	ESP (IN.WC)	MOTOR			VOLTS-PHASE-HZ	MCA	MOP				
									BHP	HP	RPM							
AC-1	A1 - MULTI-PURPOSE	DAIKIN	DPS010A				3,150	0.7				460/3/60					-	1,2,3,4,5,6,7,8
AC-2	A1 - MULTI-PURPOSE	DAIKIN	DPS010A				3,600	0.7				460/3/61					-	1,2,3,4,5,6,7,8

NOTES:

1. PROVIDE MINIMUM 2" MERV 13 FINAL FILTERS WITH FACTORY INSTALLED INSTALLATION RACK. INCLUDE ANY FILTER REMOVAL TOOLS REQUIRED FOR EASE OF ACCESS.
2. PROVIDE HINGED ACCESS PANELS WHERE REQUIRED.
3. PROVIDE CONTROL INTERFACE & WIRING AS NEEDED FOR FULL DDC CONTROL.
4. PROVIDE WITH ITEGRAL CSFM APPROVED DUCT SMOKE DETECTOR FOR UNIT SHUTDOWN.
5. PROVIDE WITH MANUFACTURER PRE-FABRICATED SPRING VIBRATION ISOLATION ROOF CURB, AND SEISMIC STRAPS.
6. VERTICAL DISCHARGE AND RETURN DUCTED UNIT.
7. PROVIDE BMS CONTROLS INTEGRATION
8. PROVIDE FULLY MODULATING ENTHALPY ECONOMIZER WITH BAROMETRIC PRESSURE RELIEF.

SPLIT DX WITH REMOTE AIR COOLED CONDENSER UNIT SCHEDULE

SYMBOL	ROOM SERVED	MANUFACTURER	MODEL	SERVING FCU	MAX. COOLING CAPACITY		EER, SEER	ELECTRICAL			WEIGHT (LBS)	REMARK
					TOTAL (MBH)	SENSIBLE (MBH)		V/PH/Hz	MOCP	MCA		
CU-1	116 ELECT ROOM	DAIKIN						208-230/1/60				1, 2, 3

NOTES:

1. CONTRACTOR SHALL SIZE REFRIGERANT LINES BASED ON FIELD ROUTING AND INCLUDE IN SHOP DRAWINGS.
2. PROVIDE CORROSION RESISTANT COATING.
3. PROVIDE BMS INTEGRATION FOR MONITERING.

SINGLE-SPLIT FAN COIL UNIT SCHEDULE

SYMBOL	MANUFACTURER	ROOM SERVED	MODEL	CORRESPONDING CU	CFM.CAPACITY	FAN POWER (W)	ELECTRICAL	REMARKS	WEIGHT (LBS)
FC-1	DAIKIN	116 ELECT ROOM		CU-1			POWERED BY OUTDOOR UNIT	1,2,3,4, 5	31

NOTES:

1. CONTRACTOR SHALL SIZE REFRIGERANT LINES BASED ON FIELD ROUTING AND INCLUDE IN SHOP DRAWINGS.
2. PROVIDE FIELD INSTALLED BLUE DIAMOND OR MAXI BLUE CONDENSATE PUMPS.
3. PROVIDE WITH FACTORY WALL MOUNTING KIT.
4. PROVIDE CONDENSATE LEAK DETECTION MONITERING WITH SHUTDOWN INTERLOCK.
5. PROVIDE BMS INTEGRATION FOR MONITERING.

EXHAUST FAN SCHEDULE

SYMBOL	MANUFACTURER	MODEL	TYPE	SERVICES	CFM	ESP (IN. WC)	ELECTRIC				WEIGHT (LBS)	REMARKS
							RPM	BHP	HP	V/PH/HZ		
EF-1	GREENHECK	SQ-160-VG	INLINE	113 POOL MECH ROOM	3,500	0.30	1,725	0.95	2.00	208-1-60	50	1,2,3
EF-2	GREENHECK	SQ-80-VG	INLINE	115 CHLORINE	220	0.30	1,725	0.04	1/10	208-1-60	50	1,2,3,4
EF-3	GREENHECK	SQ-80-VG	INLINE	114 ACID	220	0..3	1,725	0.04	1/10	208-1-60	180	1,2,3,4

NOTES:

1. PROVIDE WITH PREMIUM EFFICIENCY FAN MOTOR
2. PROVIDE WITH NEMA-3R DISCONNECT SWITCH AND MOTOR THERMAL OVERLOAD PROTECTION.
3. PROVIDE WITH ISOLATION DAMPER (GRAVITY BACKDRAFT).
4. PROVIDE WITH HI-PROZ PROTECTIVE COATING ENTIRE UNIT.

AIR DISTRIBUTION SCHEDULE

TAG	DESCRIPTION	REMARKS
CS-1	CEILING SUPPLY DIFFUSER, MODEL PAS PERFORATED FACE, 24x24 MODULE, NECK SIZE PER FLOOR PLANS, STEEL CONSTRUCTION, COORDINATE BORDER TYPE WITH CEILING TYPE: TYPE 3 FOR LAY-IN CEILING & TYPE 1 FOR SURFACE MOUNT.	1, 2
CLS-1	CEILING LINEAR SLOT DIFFUSER WITH CUSTOM PLENUM, MODEL FL-20 HIGHTHROW, 4'-0" LENGTH, 1-SLOT WITH 2" SLOT WIDTH, 10" INLET/NECK SIZE, STEEL CONSTRUCTION. COORDINATE BORDER & MOUNTING TYPE ALONG WITH CUSTOM PLENUM BOX DIMENSIONS WITH CEILING SYSTEM TYPES ON ARCHITECTURAL PLANS.	1, 2
CT-1/CR-1	CEILING TRANSFER GRILLE, TITUS 300SS, DOUBLE DEFLECTION	1, 2
CE-1	CEILING EXHAUST GRILLE, MODEL PAR PERFORATED FACE, 24x24 MODULE, STEEL CONSTRUCTION, BORDER TYPE 1 FOR SURFACE MOUNT AND TYPE 3 FOR LAY-IN CEILING.	1, 2
CE-2	CEILING EXHAUST GRILLE, MODEL PAR PERFORATED FACE, 12x12 MODULE, STEEL CONSTRUCTION, BORDER TYPE 1 FOR SURFACE MOUNT AND TYPE 3 FOR LAY-IN CEILING.	1, 2
WS-1	SIDEWALL SUPPLY GRILLE, TITUS 300SS, DOUBLE DEFLECTION, WITH OPPOSED BLADE DAMPER.	1, 2
WR-1	SIDEWALL EXHAUST GRILLE, TITUS MODEL 350SS, 3/4" SPACING, 35 DEGREE DEFLECTION.	1, 2
WT-1	SIDEWALL TRANSFER GRILLE, TITUS MODEL 350SS, 3/4" SPACING, 35 DEGREE DEFLECTION.	1, 2

NOTES:

1. SELECTIONS ARE BASED ON TITUS.
2. COORDINATE DIFFUSER'S FINISH AND LOCATION WITH ARCHITECTURAL CEILING PLAN.

els architecture+ urban design
2040 Addison St, Berkeley, CA 94704
510.549.2929 | elsarch.com

PROJECT:

PIEDMONT COMMUNITY POOL

777 MAGNOLIA AVENUE PIEDMONT, CA 94611

CLIENT:

CITY OF PIEDMONT

120 VISTA AVENUE PIEDMONT, CA 94611

PROJECT TEAM:

ARCHITECT:
ELS ARCHITECTURE AND URBAN DESIGN
2040 Addison Street
Berkeley, CA 94704
P: 510.549.2929

CIVIL ENGINEER:
BKF ENGINEERS
4670 Willow Road, Suite 250
Pleasanton, CA 94588
P: (925) 396-7704

LANDSCAPE ARCHITECT:
SWA
2200 Bridgeway
Sausalito, CA 94965
P: 415.332.5100

STRUCTURAL ENGINEER:
FORELL/ELSESSER ENGINEERS, INC.
160 Pine Street, 6th Floor
San Francisco, CA 94111
P: 415.837.0700

MEP / FIRE PROTECTION:
GUTTMANN & BLAEVOET
1620 Montgomery Street, Suite 230
San Francisco, CA 94111
P: 415.655.4000

AQUATICS:
AQUATICS DESIGN GROUP
2226 Faraday Avenue
Carlsbad, CA 92008
P: 760.438.8400

SPECIFICATIONS
TOPFLIGHT SPECS
49 Geary Street, Suite 230
San Francisco, CA 94108-5748
P: 415.546.6033

REVISION

NUMBER	DATE	DESCRIPTION

ISSUE:
100% DESIGN DEVELOPMENT

DATE:
APRIL 30, 2022

STAMP:

NOT FOR CONSTRUCTION

SHEET TITLE:
SCHEDULES

SHEET NUMBER:
M501

GENERAL NOTES

1. ENTIRE INSTALLATION SHALL CONFORM TO THE REQUIREMENTS OF THE 2019 EDITION OF CALIFORNIA PLUMBING CODE AND BUILDING CODE, ADOPTED EDITIONS OF NATIONAL FIRE PROTECTION CODES, ALL OTHER APPLICABLE CODES AND REGULATIONS, AND AUTHORITIES HAVING JURISDICTIONS.
2. COORDINATE PLUMBING SYSTEMS WITH WORK OF OTHER TRADES PRIOR TO ANY FABRICATION OR INSTALLATION. PROVIDE ALL FITTINGS, OFFSETS, AND TRANSITIONS AS REQUIRED FOR A COMPLETE WORKABLE INSTALLATION.
3. COORDINATE LOCATIONS OF ALL ROOF OPENINGS WITH STRUCTURAL, MECHANICAL, AND ARCHITECTURAL PLANS PRIOR TO ANY INSTALLATION.
4. ALL EQUIPMENT SHALL BE INSTALLED IN STRICT ACCORDANCE WITH THE EQUIPMENT MANUFACTURER'S RECOMMENDATIONS AND APPLICABLE CODES. PROVIDE ALL FITTINGS, TRANSITIONS, VALVES, AND OTHER DEVICES REQUIRED FOR A COMPLETE WORKABLE INSTALLATION.
5. MAINTENANCE LABELS SHALL BE AFFIXED TO ALL PLUMBING EQUIPMENT AND A MAINTENANCE MANUAL SHALL BE PROVIDED TO OWNER.
6. PIPES SHALL BE SUPPORTED AND BRACED PER 2019 CBC SECTION 1613A GUIDELINES FOR SEISMIC RESTRAINTS OF MECHANICAL SYSTEMS AND PLUMBING PIPING SYSTEMS OF NONSTRUCTURAL COMPONENTS.
7. HOUSEKEEPING PADS SHALL BE MINIMUM 4 INCHES HIGH WITH A MINIMUM OF 6 INCHES CLEAR AROUND EQUIPMENT.
8. ALL CLEANOUTS SHALL BE INSTALLED PER CALIFORNIA PLUMBING CODE, 2019 EDITION.
9. VERTICAL AND HORIZONTAL OFFSETS SHOWN IN PIPES INDICATE THE GENERAL RELATIONSHIP OF THE SYSTEMS. PROVIDE ADDITIONAL OFFSETS SIMILAR TO THOSE SHOWN AS REQUIRED TO SUIT CONSTRUCTION AND WORK DONE BY TRADES.
10. DRAWINGS ARE ESSENTIALY DIAGRAMMATIC TO THE EXTENT THAT ALL OFFSETS, BENDS, SPECIAL FITTINGS AND EXACT LOCATIONS ARE NOT INDICATED. EXAMINE DRAWINGS AND PREMISES IN ORDER TO DETERMINE BEST METHODS, EXACT LOCATIONS, ROUTES AND BUILDING CONSTRUCTIONS. INSTALL APPARATUS AND EQUIPMENT IN ACCESSIBLE LOCATIONS.
11. FOLLOW AS CLOSE AS POSSIBLE LAYOUT INDICATED ON DRAWINGS.
12. REFER TO ARCHITECTURAL DRAWINGS FOR EXACT LOCATION AND ELEVATIONS OF PLUMBING FIXTURES.
13. ALL PIPING IN FINISHED AREAS SHALL BE CONCEALED. EXPOSED PIPING, WHERE NECESSARY, SHALL BE RUN AS HIGH AS POSSIBLE AND TIGHT TO THE WALLS.
14. LOCATIONS OF PIPING, FIXTURES AND EQUIPMENT INDICATED ON DRAWINGS ARE APPROXIMATE ONLY, AND SHALL BE CHANGED TO MEET THE ARCHITECTURAL AND STRUCTURAL CONDITIONS AS REQUIRED, AT NO EXTRA COST TO THE OWNER.
15. ALL PLUMBING FIXTURES AND EQUIPMENT SHALL HAVE ISOLATING VALVES, ACCESSIBLE SHUT-OFF VALVE ON ALL WATER SUPPLY LINES
16. CONTRACTOR TO VERIFY EXACT LOCATION AND INVERT ELEVATION OF UTILITIES IN THE FIELD PRIOR TO INSTALLATION OF ANY UNDERGROUND PIPING.
17. INSTALL ALL VALVES, CONTROLS, ETC, IN ACCESSIBLE LOCATIONS. PROVIDE ADEQUATELY SIZED ACCESS DOORS WHERE REQUIRED.
18. PLUMBING CONTRACTOR SHALL FILL FLOOR DRAINS WITH WATER UPON COMPLETION OF WORK AND TESTING.
19. INSULATE ALL WATER PIPING PER TITLE 24 REQUIREMENTS AND PROJECT SPECIFICATIONS.
20. ABSOLUTE ACCURACY OF DRAWING AND SPECIFICATIONS CANNOT BE GUARANTEED. DESIGN DRAWINGS ARE DIAGRAMMATIC IN NATURE. WHILE EVERY EFFORT HAS BEEN MADE TO COORDINATE THE LOCATION OF EQUIPMENT, PIPING, ETC., WITH OTHER TRADES, IT IS THE RESPONSIBILITY OF THE CONTRACTOR TO COORDINATE EXACT REQUIREMENTS GOVERNED BY ACTUAL JOB CONDITIONS.
21. PENETRATION OF RATED ASSEMBLY SHALL BE FIRE-STOPPED. STOPPING SYSTEM (MATERIAL AND DESIGN) SHALL CONFORM TO BOTH FLAME (F) AND TEMPERATURE(T) RATING AS REQUIRED BY LOCAL BUILDING CODE AND AS TESTED BY NATIONALLY ACCEPTED TEST AGENCIES PER ASTM E814 OR REPRESENTABLE OF FIELD CONDITION.
22. COMBINE ALL VERTICAL VENTS WHERE PRACTICAL PRIOR TO ROOF PENETRATION.
23. IT IS THE CONTRACTOR'S RESPONSIBILITY TO INSTALL ALL WORK TO MEET OR EXCEED MINIMUM REQUIREMENTS STIPULATED IN CURRENT ISSUE OF APPLICABLE STANDARDS, CODES, OR REGULATIONS.
24. ALL PLUMBING WORK SHALL COMPLY WITH LEAD FREE REQUIREMENTS OF SECTION 116875 OF CALIFORNIA HEALTH AND SAFETY CODE.
25. INSTALL ALL PIPING TO AVOID ARCHITECTURAL FRAMING, STRUCTURAL MEMBERS AND OTHER CONSTRUCTION. COORDINATE PIPING LAYOUT WITH ALL OTHER CONTRACT DIVISIONS OF WORK BEFORE FABRICATION AND INSTALLATION.
26. PROVIDE VALVED DRAINS AT THE LOW POINTS IN EACH PIPING SYSTEM.

SYMBOLS

Some of the symbols shown may not be used on this project.

GENERAL

- EXISTING TO REMAIN
- TO BE REMOVED
- NEW WORK
- POINT OF CONNECTION

TAGS

- EQ-# — EQUIPMENT TAG - TEXT ONLY
- EQ / # — EQUIPMENT TAG
- EQ-# EQ-# — KITCHEN EQUIPMENT TAGS
- ABC / # — PLUMBING RISER TAG
- # — SHEET NOTE TAG
- # — ALTERNATE SHEET NOTE TAGS

PUMPS

- PUMP - GENERIC
- PUMP

SENSORS & SWITCHES

- FM — FLOW METER
- FS — FLOW SWITCH
- FS — FLOW SWITCH OR SENSOR
- PG — PRESSURE GAUGE
- PS — PRESSURE SWITCH OR SENSOR
- REGULATOR
- TS — TEMPERATURE SWITCH OR SENSOR
- TH — THERMOMETER

PIPING & FITTINGS

- DIRECTION AND FLOW
- PIPE UP - TEE & ELBOW
- PIPE DOWN - TEE & ELBOW
- BJ — BALL JOINT
- CAP OR PLUGGED FITTING
- CO — CLEANOUT
- EJ — EXPANSION JOINT
- FLANGE
- FLEXIBLE CONNECTION
- PETE'S PLUG
- PIPE ANCHOR
- PIPE GUIDE
- POINT OF CONNECTION
- P-TRAP
- REDUCER
- STRAINER
- UNION

SYMBOLS

Some of the symbols shown may not be used on this project.

VALVES

- ANGLE OR STOP CHECK VALVE
- BFP — BACKFLOW PREVENTER
- RPBP — REDUCE PRESSURE BACKFLOW PREVENTER
- BV — BALANCING VALVE
- BLV — BALL VALVE
- BFV — BUTTERFLY VALVE
- CHECK VALVE
- CV — CONTROL VALVE, TWO WAY
- CV — CONTROL VALVE, THREE WAY
- GAS COCK
- GV — GATE VALVE
- GLV — GLOBE VALVE
- HB — HOSE BIBB
- NEEDLE VALVE
- PRV — PRESSURE REDUCING VALVE ASSEMBLY
- RELIEF VALVE
- SOLENOID VALVE

FIRE PROTECTION

- F — FIRE MAIN
- SP — FIRE SPRINKLER
- DSP — DRY STANDPIPE
- WSP — WET STANDPIPE
- CSP — FIRE MAIN / COMBINATION STANDPIPE

PROCESS

- A(*) — COMPRESSED AIR (* = PSI)
- CO2 — CARBON DIOXIDE
- CS — DOMESTIC COLD WATER (SOFT)
- DE — DEIONIZED WATER
- DI — DISTILLED WATER
- FO — FUEL OIL
- FOR — FUEL OIL RETURN
- FOS — FUEL OIL SUPPLY
- FOV — FUEL OIL VENT
- EVAC — GAS EVACUATION
- HE — HELIUM
- IRRW — IRRIGATION WATER
- LPG — LIQUID PETROLIUM GAS
- N2 — NITROGEN
- NO2 — NITROUS OXIDE
- NW — NON-POTABLE WATER
- O2 — OXYGEN
- PD — PUMP DISCHARGE
- PR — PUMP RETURN
- PW — PUMP WASTE
- VAC — VACUUM
- CA — COMPRESSED AIR
- VV — VAPOR VENT
- LW — LABORATORY WASTE - EXPOSED
- LW — LABORATORY - BELOW FLOOR
- LV — VENT

DOMESTIC

- C — DOMESTIC COLD WATER
- H — DOMESTIC HOT WATER
- HWR — DOMESTIC HOT WATER RETURN
- G — NATURAL GAS
- L — LEADER (ARCHITECTURAL DOWNSPOUT, SEE ARCH. DWGS.)
- OF — OVERFLOW DRAIN
- SD — STORM DRAIN
- SS — SANITARY SEWER - EXPOSED
- SS — SANITARY SEWER - BELOW FLOOR
- V — VENT
- W — WASTE

DRAINS & CLEANOUTS

- AD — AREA DRAIN
- FCO — FLOOR CLEANOUT
- FD — FLOOR DRAIN
- GCO — GRADE CLEANOUT
- PD — PLANTER DRAIN
- RD — ROOF DRAIN
- OF — OVERFLOW DRAIN
- RR — ROOF RECEPTOR
- FS — FLOOR SINK
- WCO — WALL CLEANOUT

PLUMBING LEGEND

(SOME OF THE ABBREVIATIONS AND SYMBOLS SHOWN MAY NOT BE USED ON THIS PROJECT.)

A(*)	COMPRESSED AIR (*PSI WHERE REQUIRED)
	INSTRUMENT AIR
AD	AREA DRAIN
AFF	ABOVE FINISHED FLOOR
AP	ACCESS PANEL
BF	BOILER FEED
BFP	BACKFLOW PREVENTER
BLDG	BUILDING
BLV	BALL VALVE
BMS	BUILDING MANAGEMENT SYSTEM
BV	BALANCING VALVE
BWV	BACKWATER VALVE
C	DOMESTIC COLD WATER
CD	CONDENSATE DRAIN
CF	CHEMICAL FEED
CFF	CAP FOR FUTURE
CFH	CUBIC FEET PER HOUR
CI	CAST IRON
CLG	CEILING
CO	CLEANOUT
CO2	CARBON DIOXIDE
COND	CONDENSER/CONDENSING/CONDENSATE
CP	CHROME PLATED
CPVC	CHLORINATED POLYVINYL CHLORIDE
CRP	CONDENSATE RETURN PUMP
CS	DOMESTIC COLD WATER (SOFT)
CSK	CLINICAL SINK
CTE	CONNECT TO EXISTING
CV	CONTROL VALVE
CWR	CONDENSER WATER RETURN
CWS	CONDENSER WATER SUPPLY
CSP	FIRE MAIN / COMBINATION STANDPIPE
F	FIRE MAIN
DB	DRY BULB TEMPERATURE
DE	DEIONIZED WATER
DF	DRINKING FOUNTAIN
DI	DISTILLED WATER
DN	DOWN
DR	DRAIN
DSP	DRY STANDPIPE
DT	DRIP TRAP
DWG	DRAWING
(E)	EXISTING
ED	EXTRACTION DAMPER
EJ	EXPANSION JOINT
EL	ELEVATION
ENT	ENTERING
EO	ETHYLENE OXIDE
EOV	ETHYLENE OXIDE VENT
EVAC	GAS EVACUATION
EWT	ENTERING WATER PRESSURE
FC	FLEXIBLE CONNECTION
FCO	FLOOR CLEANOUT
FD	FLOOR DRAIN
FDC	FIRE DEPARTMENT CONNECTION
FDR	FIRE DAMPER
FE	FIRE EXTINGUISHER
FEC	FIRE EXTINGUISHER CABINET
FH	FIRE HYDRANT
FHC	FIRE HOSE CABINET
FIN	FINISHED
FL	FIRE LINE
FLG	FLANGE
FLR	FLOOR
FM	FLOW METER
FO	FUEL OIL
FOF	FUEL OIL FILL
FOG	FUEL OIL GAUGE
FOR	FUEL OIL RETURN
FOS	FUEL OIL SUPPLY
FOV	FUEL OIL VENT
FPM	FEET PER MINUTE
FS	FLOW SWITCH
FSK	FLOOR SINK
FTT	FLOAT AND THERMOSTAT TRAP
FUT	FUTURE
G	NATURAL GAS
GA	GAUGE
GCO	GRADE CLEANOUT
GI	GALVANIZED IRON
GLV	GLOBE VALVE
GPH	GALLONS PER HOUR
GR	GRADE
GV	GATE VALVE
H(*)	DOMESTIC HOT WATER (*TEMP. WHERE REQ'D.)
HB	HOSE BIBB
HE	HELIUM
HET	HOT WATER EXPANSION TANK
HPDT	HIGH PRESSURE DRIP TRAP
HPR	HIGH PRESSURE CONDENSATE RETURN
HPS	HIGH PRESSURE STEAM
HTG	HEATING
HU	HUMIDIFIER
HV	HEATING AND VENTILATING
HVAC	HEATING VENTILATING AND AIR CONDITIONING
HWR	DOMESTIC HOT WATER RETURN
HZ	HERTZ
ID	INSIDE DIAMETER
IE	INVERT ELEVATION
IFS	IN FURRED SPACE
IPS	IRON PIPE SIZE
IRRW	IRRIGATION WATER
IW	INDIRECT WASTE
L	RAINWATER LEADER
LA	LABORATORY COMPRESSED AIR
LAT	LEAVING AIR TEMPERATURE/LATENT
LP	LOW PRESSURE
LPDT	LOW PRESSURE DRIP TRAP
LPG	LIQUID PETROLEUM GAS
LPR	LOW PRESSURE CONDENSATE RETURN
LPS	LOW PRESSURE STEAM
LV	LAVATORY
LVG	LEAVING
LWCO	LOW WATER CUT-OFF
LWT	LEAVING WATER TEMPERATURE
MA	MEDICAL COMPRESSED AIR
MBH	THOUSAND BRITISH THERMAL UNITS PER HOUR
MCC	MOTOR CONTROL CENTER
MD	MOTORIZED DAMPER
MFR	MANUFACTURER
MG	MEDICAL GAS
MGA	MEDICAL GAS ALARM
MPDT	MEDIUM PRESSURE DRIP TRAP
MPR	MEDIUM PRESSURE CONDENSATE RETURN
MPS	MEDIUM PRESSURE STEAM
(N)	NEW
N2	NITROGEN
NC	NORMALLY CLOSED
NFPA	NATIONAL FIRE PROTECTION ASSOCIATION
NO	NORMALLY OPEN
N2O	NITROUS OXIDE
NTS	NOT TO SCALE
NW	NON-POTABLE WATER
O2	OXYGEN
OD	OUTSIDE DIMENSION
OF	OVERFLOW DRAIN
OSY	OUTSIDE STEM AND YOKE
OV	OUTLET VELOCITY
PCHS	PRIMARY CHILLED WATER SUPPLY
PCHR	PRIMARY CHILLED WATER RETURN
PD	PUMP DISCHAGE/PRESSURE DROP
PFF	PLUG FOR FUTURE
PG	PRESSURE GAUGE
PHW	PRE HEAT WATER
PIV	POST INDICATOR VALVE
PLBG	PLUMBING
PR	PUMP RETURN
PRV	PRESSURE REDUCING VALVE
PSI	POUNDS PER SQUARE INCH
PSIG	POUNDS PER SQUARE INCH GAUGE
PTS	PNEUMATIC TUBE SYSTEM
PW	PUMP WASTE
RD	ROOF DRAIN
RIC	ROUGH IN AND CONNECT
RIO	ROUGH IN ONLY
RPBP	REDUCED PRESSURE BACKFLOW PREVENTER
RPM	REVOLUTIONS PER MINUTE
RV	RELIEF VENT/ROOF VENTILATOR
RVV	RELIEF VALVE VENT
SA	SHOCK ARRESTOR
SB	STZ BATH
SD	STORM DRAINAGE
SH	SHOWER
SK	SINK
SM	SHEET METAL
SP	FIRE SPRINKLER
SPD	SPRINKLER DRAIN
SS	STAINLESS STEEL
SSD	SUBSURFACE DRAIN
SSK	SERVICE SINK
ST	STEAM TRAP
STD	STANDARD
STL	STEEL
SV	STEAM VENT
SW	SPECIAL WASTE
TCV	TEMPERATURE CONTROL VALVE
TD	TRENCH DRAIN
TH	THERMOMETER
UR	URINAL
V	SANITARY VENT
MV	MEDICAL VACUUM
VB	VACUUM BREAKER
VCP	VITRIFIED CLAY PIPE
VEL	VELOCITY
VTR	VENT THRU ROOF
VV	VAPOR VENT
W	SAN. WASTE
VW	VACUUM SAN. WASTE
VWV	VACUUM SAN. WASTE VENT/ AIR INTAKE
WAGD	WASTE ANESTHETIC GAS DISPOSAL
WC	WATER CLOSET
WCO	WALL CLEANOUT
WP	WEATHER OR WATER PROOF
WSP	WET STAND PIPE
WT	WEIGHT

els architecture+ urban design
2040 Addison St, Berkeley, CA 94704
510.549.2929 | elsarch.com

PROJECT:

PIEDMONT COMMUNITY POOL

777 MAGNOLIA AVENUE PIEDMONT, CA 94611

CLIENT:

CITY OF PIEDMONT

120 VISTA AVENUE PIEDMONT, CA 94611

PROJECT TEAM:

ARCHITECT:
ELS ARCHITECTURE AND URBAN DESIGN
2040 Addison Street
Berkeley, CA 94704
P: 510.549.2929

CIVIL ENGINEER:
SKF ENGINEERS
5670 Willow Road, Suite 250
Pleasanton, CA 94588
P: (925) 396-7704

LANDSCAPE ARCHITECT:
SWA
1200 Bridgeway
Sausalito, CA 94965
P: 415.332.5100

STRUCTURAL ENGINEER:
FORELL/ELSESSER ENGINEERS, INC.
160 Pine Street, 6th Floor
San Francisco, CA 94111
P: 415.837.0700

MEP / FIRE PROTECTION:
GUTTMANN & BLAEVOET
620 Montgomery Street, Suite 230
San Francisco, CA 94111
P: 415.655.4000

AQUATICS:
AQUATICS DESIGN GROUP
2226 Faraday Avenue
Carlsbad, CA 92008
P: 760.438.8400

SPECIFICATIONS
TOPFLIGHT SPECS
49 Geary Street, Suite 230
San Francisco, CA 94108-5748
P: 415.546.6033

REVISION

NUMBER	DATE	DESCRIPTION

ISSUE:
100% DESIGN DEVELOPMENT

DATE:
APRIL 30, 2022

STAMP:

NOT FOR CONSTRUCTION

SHEET TITLE:

LEGEND, SYMBOLS, GENERAL NOTES & DRAWING LIST

SHEET NUMBER:

P001

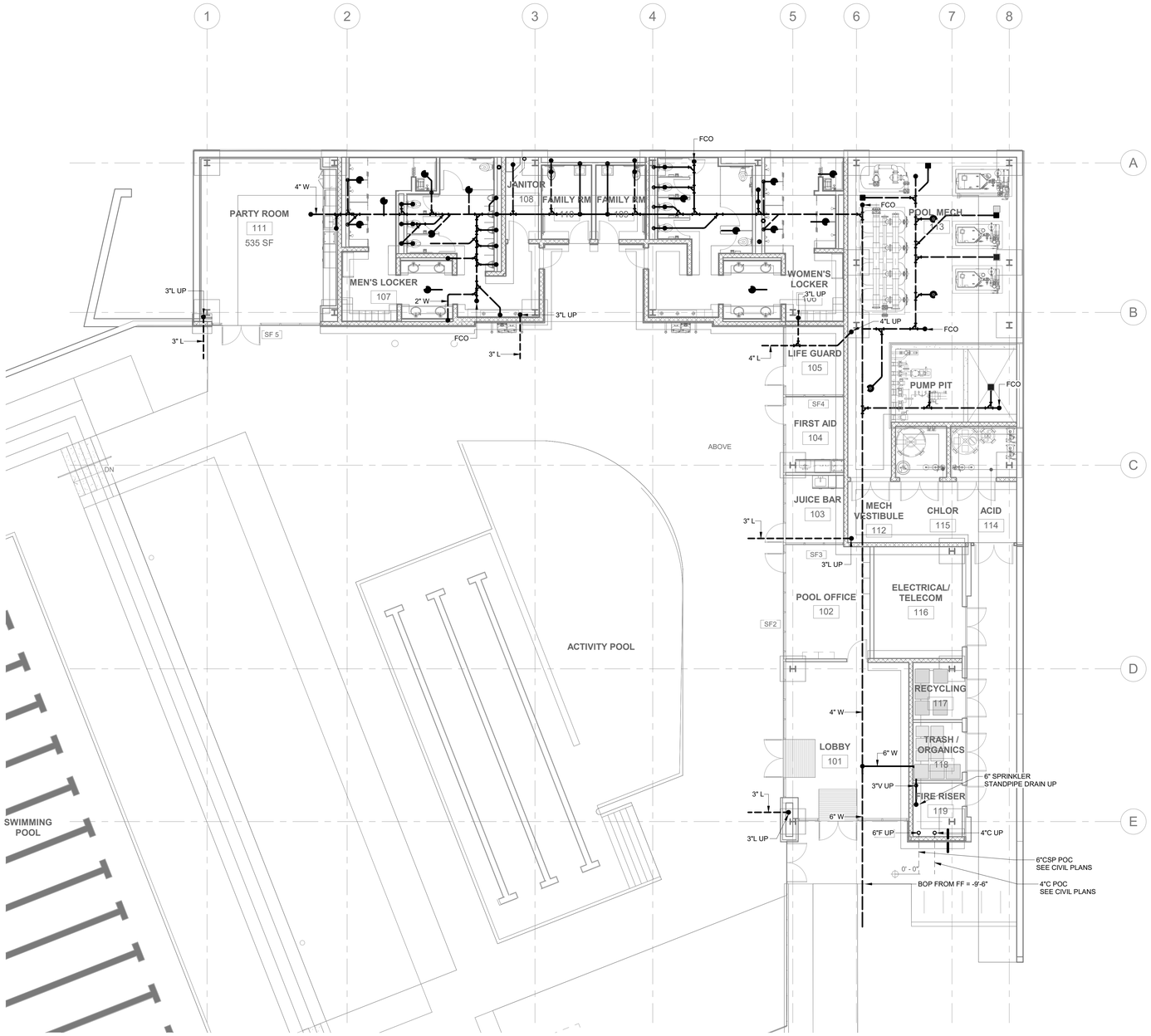

1 FOUNDATION - FLOOR PLAN - PLUMBING
1/8" = 1'-0"

KEYNOTES

GENERAL NOTES

els architecture+ urban design
2040 Addison St, Berkeley, CA 94704
510.549.2929 | elsarch.com

PROJECT:

PIEDMONT COMMUNITY POOL

777 MAGNOLIA AVENUE PIEDMONT, CA 94611

CLIENT:

CITY OF PIEDMONT

120 VISTA AVENUE PIEDMONT, CA 94611

PROJECT TEAM:

ARCHITECT:
ELS ARCHITECTURE AND URBAN DESIGN
2040 Addison Street
Berkeley, CA 94704
P: 510.549.2929

CIVIL ENGINEER:
BKF ENGINEERS
4670 Willow Road, Suite 250
Pleasanton, CA 94588
P: (925) 396-7704

LANDSCAPE ARCHITECT:
SWA
2200 Bridgeway
Sausalito, CA 94965
P: 415.332.5100

STRUCTURAL ENGINEER:
FORELL/ELSESSER ENGINEERS, INC.
160 Pine Street, 6th Floor
San Francisco, CA 94111
P: 415.837.0700

MEP / FIRE PROTECTION:
GUTTMANN & BLAEVOET
1620 Montgomery Street, Suite 230
San Francisco, CA 94111
P: 415.655.4000

AQUATICS:
AQUATICS DESIGN GROUP
2226 Faraday Avenue
Carlsbad, CA 92008
P: 760.438.8400

SPECIFICATIONS
TOPFLIGHT SPECS
49 Geary Street, Suite 230
San Francisco, CA 94108-5748
P: 415.546.6033

REVISION

NUMBER	DATE	DESCRIPTION

ISSUE:
100% DESIGN DEVELOPMENT

DATE:
APRIL 30, 2022

STAMP:

NOT FOR CONSTRUCTION

SHEET TITLE:
FOUNDATION LEVEL - PLUMBING

SHEET NUMBER:
P200

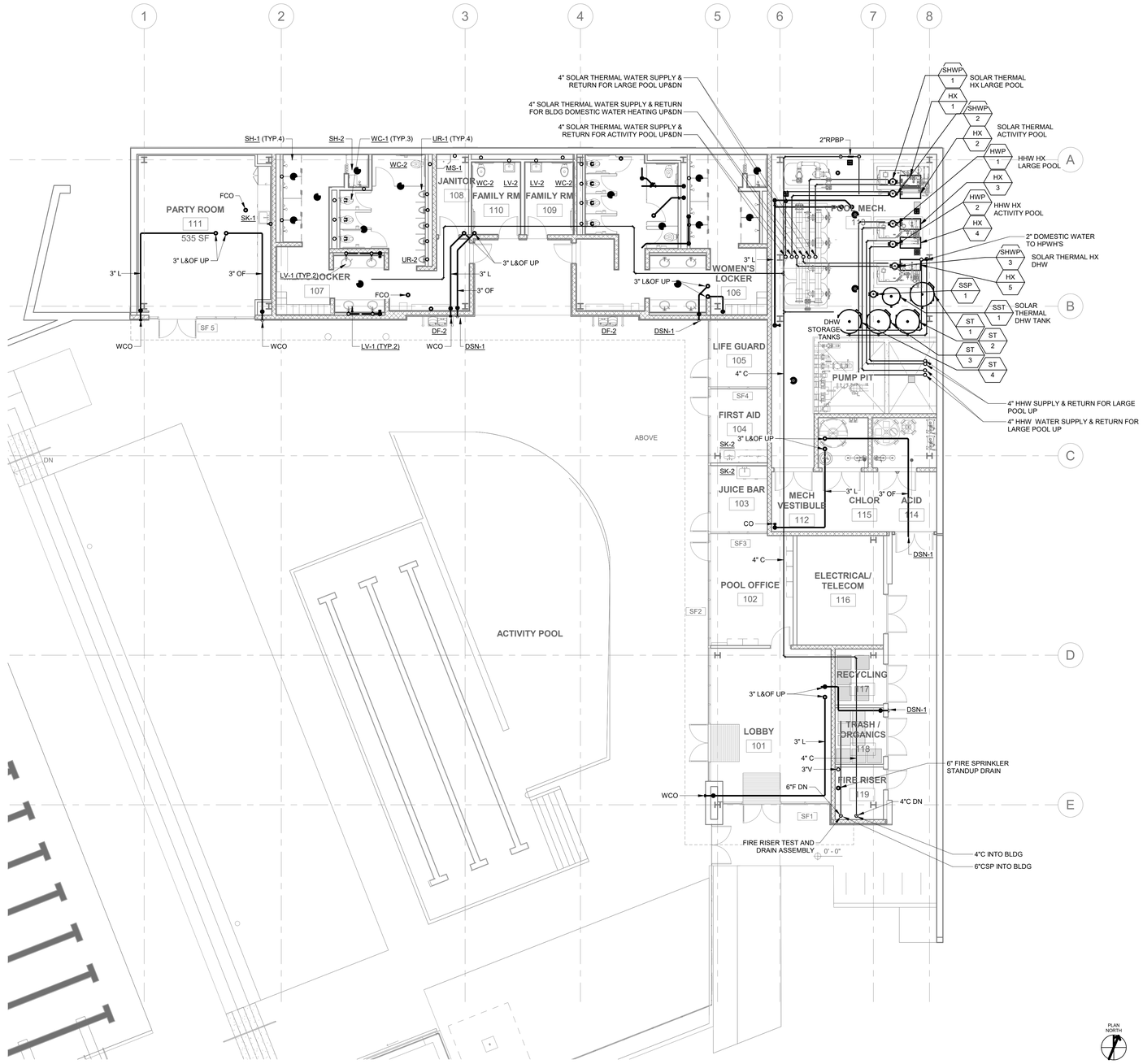

1 FLOOR PLAN - LEVEL 1 - PLUMBING
1/8" = 1'-0"

KEYNOTES

GENERAL NOTES

A. PROVIDE FULL SPRINKLER COVERAGE OF ALL AREAS OF THE BUILDING INCLUDING OVERHANGS AND CANOPIES, AND ANY CONCEALED SPACES.

els architecture+ urban design
2040 Addison St, Berkeley, CA 94704
510.549.2929 | elsarch.com

PROJECT:

PIEDMONT COMMUNITY POOL

777 MAGNOLIA AVENUE PIEDMONT, CA 94611

CLIENT:

CITY OF PIEDMONT

120 VISTA AVENUE PIEDMONT, CA 94611

PROJECT TEAM:

ARCHITECT:
ELS ARCHITECTURE AND URBAN DESIGN
2040 Addison Street
Berkeley, CA 94704
P: 510.549.2929

CIVIL ENGINEER:
BKF ENGINEERS
4670 Willow Road, Suite 250
Pleasanton, CA 94588
P: (925) 396-7704

LANDSCAPE ARCHITECT:
SWA
2200 Bridgeway
Sausalito, CA 94965
P: 415.332.5100

STRUCTURAL ENGINEER:
FORELL/ELSESSER ENGINEERS, INC.
160 Pine Street, 6th Floor
San Francisco, CA 94111
P: 415.837.0700

MEP / FIRE PROTECTION:
GUTTMANN & BLAEVOET
1620 Montgomery Street, Suite 230
San Francisco, CA 94111
P: 415.655.4000

AQUATICS:
AQUATICS DESIGN GROUP
2226 Faraday Avenue
Carlsbad, CA 92008
P: 760.438.8400

SPECIFICATIONS
TOPFLIGHT SPECS
49 Geary Street, Suite 230
San Francisco, CA 94108-5748
P: 415.546.6033

REVISION

NUMBER	DATE	DESCRIPTION

ISSUE:
100% DESIGN DEVELOPMENT

DATE:
APRIL 30, 2022

STAMP:

NOT FOR CONSTRUCTION

SHEET TITLE:
FLOOR PLAN - LEVEL 1 - PLUMBING

SHEET NUMBER:
P201

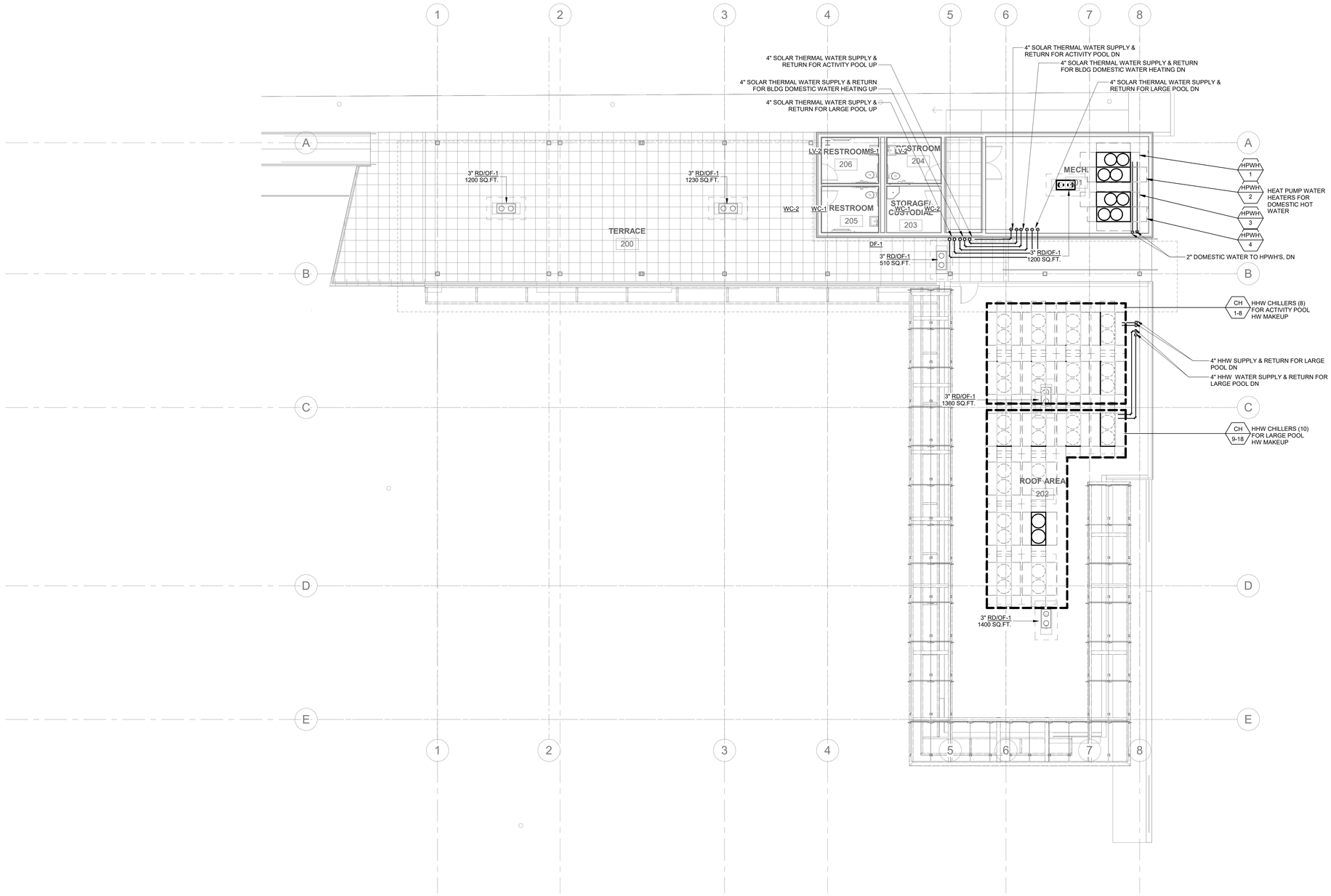

1 HIGH ROOF PLAN - PLUMBING
1/8" = 1'-0"

KEYNOTES #

GENERAL NOTES

els architecture+ urban design
2040 Addison St, Berkeley, CA 94704
510.549.2929 | elsarch.com

PROJECT:

PIEDMONT COMMUNITY POOL

777 MAGNOLIA AVENUE PIEDMONT, CA 94611

CLIENT:

CITY OF PIEDMONT

120 VISTA AVENUE PIEDMONT, CA 94611

PROJECT TEAM:

ARCHITECT:
ELS ARCHITECTURE AND URBAN DESIGN
2040 Addison Street
Berkeley, CA 94704
P: 510.549.2929

CIVIL ENGINEER:
BKF ENGINEERS
4670 Willow Road, Suite 250
Pleasanton, CA 94588
P: (925) 396-7704

LANDSCAPE ARCHITECT:
SWA
2200 Bridgeway
Sausalito, CA 94965
P: 415.332.5100

STRUCTURAL ENGINEER:
FORELL/ELSESSER ENGINEERS, INC.
160 Pine Street, 6th Floor
San Francisco, CA 94111
P: 415.837.0700

MEP / FIRE PROTECTION:
GUTTMANN & BLAEVOET
1620 Montgomery Street, Suite 230
San Francisco, CA 94111
P: 415.655.4000

AQUATICS:
AQUATICS DESIGN GROUP
2226 Faraday Avenue
Carlsbad, CA 92008
P: 760.438.8400

SPECIFICATIONS
TOPFLIGHT SPECS
49 Geary Street, Suite 230
San Francisco, CA 94108-5748
P: 415.546.6033

REVISION

NUMBER	DATE	DESCRIPTION

ISSUE:
100% DESIGN DEVELOPMENT

DATE:
APRIL 30, 2022

STAMP:

NOT FOR CONSTRUCTION

SHEET TITLE:
ROOF PLAN - PLUMBING

SHEET NUMBER:
P205

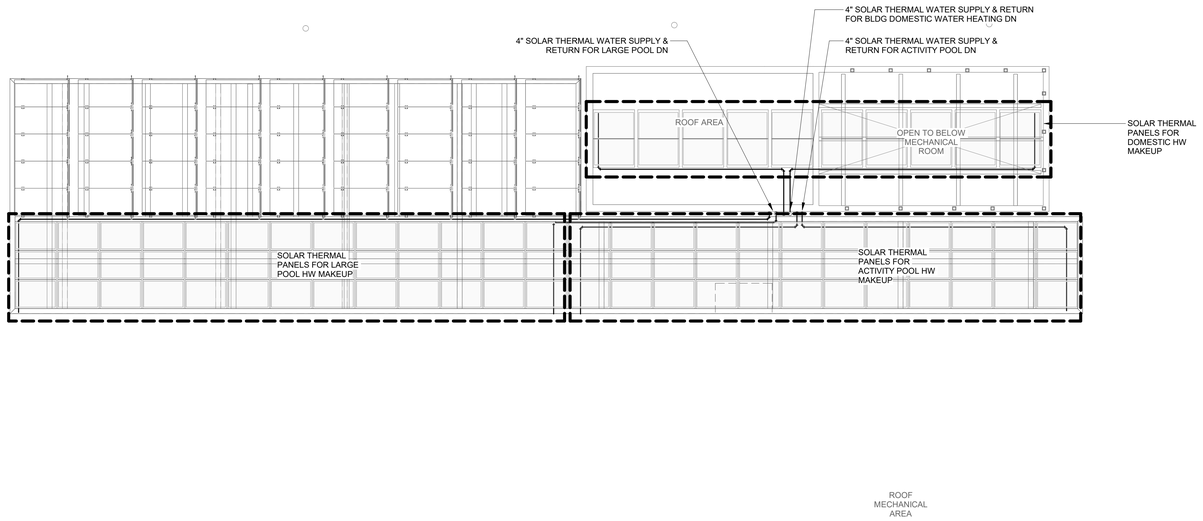

1 HIGH ROOF PLAN - PLUMBING
1/8" = 1'-0"

PLAN NORTH

KEYNOTES #

GENERAL NOTES

els architecture+ urban design
2040 Addison St, Berkeley, CA 94704
510.549.2929 | elsarch.com

PROJECT:

PIEDMONT COMMUNITY POOL

777 MAGNOLIA AVENUE PIEDMONT, CA 94611

CLIENT:

CITY OF PIEDMONT

120 VISTA AVENUE PIEDMONT, CA 94611

PROJECT TEAM:

ARCHITECT:
ELS ARCHITECTURE AND URBAN DESIGN
2040 Addison Street
Berkeley, CA 94704
P: 510.549.2929

CIVIL ENGINEER:
BKF ENGINEERS
4670 Willow Road, Suite 250
Pleasanton, CA 94588
P: (925) 396-7704

LANDSCAPE ARCHITECT:
SWA
2200 Bridgeway
Sausalito, CA 94965
P: 415.332.5100

STRUCTURAL ENGINEER:
FORELL/ELSESSER ENGINEERS, INC.
160 Pine Street, 6th Floor
San Francisco, CA 94111
P: 415.837.0700

MEP / FIRE PROTECTION:
GUTTMANN & BLAEVOET
1620 Montgomery Street, Suite 230
San Francisco, CA 94111
P: 415.655.4000

AQUATICS:
AQUATICS DESIGN GROUP
2226 Faraday Avenue
Carlsbad, CA 92008
P: 760.438.8400

SPECIFICATIONS
TOPFLIGHT SPECS
49 Geary Street, Suite 230
San Francisco, CA 94108-5748
P: 415.546.6033

REVISION

NUMBER	DATE	DESCRIPTION

ISSUE:
100% DESIGN DEVELOPMENT

DATE:
APRIL 30, 2022

STAMP:

NOT FOR CONSTRUCTION

SHEET TITLE:

HIGH ROOF PLAN - PLUMBING

SHEET NUMBER:

P206

PLUMBING FIXTURE PIPING CONNECTION SCHEDULE

FIXTURE	DESCRIPTION	PIPING TO FINAL BRANCH CONNECTION			
		W	V	C	H
WC	WATER CLOSET	4"	2"	1-1/4"	-
UR	URINAL	2"	2"	3/4"	-
LV	LAVATORY	2"	2"	1/2"	1/2"
KS	KITCHEN SINK	2"	2"	1/2"	1/2"
HB	HOSE BIBB	-	-	3/4"	-
DF	DRINKING FOUNTAIN	2"	2"	1/2"	-
MS	SERVICE SINK	3"	2"	3/4"	3/4"
TP	TRAP PRIMER	-	-	1/2"	-
SH	SHOWER	3"	2"	3/4"	3/4"

PLUMBING FIXTURE SCHEDULE (1) (11) (12)

TAG	TYPE	FIXTURE	FAUCET OR VALVE MANUFACTURER & MODEL NO. (2)	STRAINER & TAILPIECE MFG. & MODEL NO.	TRAP MFG. AND MODEL NO. (4)	STOPS & SUPPLY PIPES MFG. & MODEL NO.	REMARKS
WC-1	WATER CLOSET FLUSH VALVE FLOOR MOUNTED	AMERICAN STANDARD #2858.111 "MADERA FLOWISE", TOP SPUD, 15" H, FLOOR MOUNTED, ELONGATED BOWL, STATIC WEIGHT LOAD OF 1,000 LBS, 1.1 GPF	AMERICAN STANDARD #6047.111 MANUAL FLUSH VALVE, WITH ANGLE STOP, CHROME PLATED CAST BRASS, 1.1 GPF	--	INTEGRAL WITH FIXTURE	--	BEMIS #955SSC HAVY-WEIGHT MOLDED SOLID PLASTIC, ELONGATED SEAT WITH OPEN FRONT, LESS COVER, WHITE WITH SS HINGES (8) (9)
WC-2	WATER CLOSET FLUSH VALVE FLOOR MOUNTED ADA	AMERICAN STANDARD #2854.111 "MADERA FLOWISE", TOP SPUD, 16.5" H ADA, FLOOR MOUNTED, ELONGATED BOWL, STATIC WEIGHT LOAD OF 1,000 LBS, 1.1 GPF	AMERICAN STANDARD #6047.111 MANUAL FLUSH VALVE, WITH ANGLE STOP, CHROME PLATED CAST BRASS, 1.1 GPF	--	INTEGRAL WITH FIXTURE	--	BEMIS #955SSC HAVY-WEIGHT MOLDED SOLID PLASTIC, ELONGATED SEAT WITH OPEN FRONT, LESS COVER, WHITE WITH SS HINGES (5) (8) (9)
LV-1	LAVATORY COUNTER MOUNTED ADA	JUST #OLF-ADA-1619, SELF-RIMMING, 18-GAUGE STAINLESS STEEL, POLISHED FINISH, OVAL, 15 1/2"x11 3/8"x6" INSIDE BOWL, WITH REAR DRAIN AND FRONT OVERFLOW. PROVIDE THERMOSTATIC MIXING VALVE SET AT 110°F. SEE TV-1,	TOTO #TEL113-D20E THE FAUCET SHALL HAVE HYDROPOWERED SELF-GENERATING, ECOPOWER SYSTEM. THE FAUCET SHALL HAVE MAXIMUM OF 20 SECONDS ON-DEMAND FLOW (0.11GPC). THE FAUCET SHALL HAVE SELF-ADJUSTING SENSOR. PRODUCT EQUIPPED WITH 0.35GPM FLOW REGULATOR. (6)	JUST #J-115-FS	ZURN 1-1/4"x1-1/2" #Z-8701-9-LC-S, 17 GA.	BRASSCRAFT SPEEDWAY #CR-1900-S2 SERIES LOOSEKEY ANGLE STOP	(3) (7)
LV-2	LAVATORY WALL MOUNTED ADA	AMERICAN STANDARD "MURRO" # 0958.008EC, CENTER HOLE, WITH REAR OVERFLOW, CONCEALED ARM SUPPORTS, WITH 0059.020EC SHROUD / KNEE GUARD, BOWL SIZE 15.5" x 13.5" x 5"-DEEP. PROVIDE THERMOSTATIC MIXING VALVE SET AT 110°F. SEE TV-1.	TOTO MODEL #TEL113-D20E THE FAUCET SHALL HAVE HYDROPOWERED SELF-GENERATING, ECOPOWER SYSTEM. THE FAUCET SHALL HAVE MAXIMUM OF 20 SECONDS ON-DEMAND FLOW (0.11GPC). THE FAUCET SHALL HAVE SELF-ADJUSTING SENSOR. PRODUCT EQUIPPED WITH 0.35GPM FLOW REGULATOR. (6)	JUST #J-115-FS	ZURN 1-1/4"x1-1/2" #Z-8701-9-LC-S, 17 GA.	BRASSCRAFT SPEEDWAY #CR-1900-S2 SERIES LOOSEKEY ANGLE STOP	(3) (5) (7)
UR-1	URINAL ADA	AMERICAN STANDARD "WASHBROOK FLO-WISE #6590.503, VITREOUS CHINA W/ EVER-CLEAN SURFACE, WHITE, WITH 4 BOLTS & CAPS, TOP SPUD, 0.125 GPF	AMERICAN STANDARD # 6045.013 MANUAL PISTON-TYPE FLUSH VALVE, WITH ANGLE STOP, CHROME PLATED CAST BRASS, 0.125 GPF	--	INTEGRAL WITH FIXTURE	--	(5)
SK-1	SINK COUNTER MOUNTED	JUST #SL-ADA-2125-A-GR, TYPE 304, 18-GA STAINLESS STEEL, 16"X22"X5.5" INSIDE BOWL DIMENSIONS, CENTER REAR DRAIN HOLE.	CHICAGO MANUAL SINK FAUCETS 2300-8ABCP DECK-MOUNTED MANUAL SINK FAUCET, SINGLE-HOLE MOUNTING WITH OPTIONAL 8" COVER PLATE. 8" FIXED CENTERS, PRESSURE COMPENSATING SOFTFLO AERATOR 1.5 GPM (6)	JUST #J-35 FLAT GRATE	ZURN 1-1/2"x1-1/2" #Z-870-9-LC-S, 17 GA.	BRASSCRAFT SPEEDWAY #CR-1900-S2 SERIES LOOSEKEY ANGLE STOP	(3) (5)
SH-1	SHOWER	SEE ARCHITECTURAL DRAWINGS FOR DETAILS	MOAN #8375EP15 SINGLE-HANDLE PRESSURE BALANCING SHOWER VALVE WITH INTEGRAL STOPS, ADJUSTABLE TEMPERATURE LIMIT STOPS(SET AT 110°F MAX). CHROME PLATED METAL CONSTRUCTION, ADA LEVER HANDLE, SHOWERHEAD, 1.5 GPM (5.7 LPM). ASSE 1016 COMPLIANT. (6)	FD-3			
SH-2	SHOWER ADA	SEE ARCHITECTURAL DRAWINGS FOR DETAILS	MOAN #8375EP15 SINGLE-HANDLE PRESSURE BALANCING SHOWER VALVE WITH INTEGRAL STOPS, ADJUSTABLE TEMPERATURE LIMIT STOPS(SET AT 110°F MAX). CHROME PLATED METAL CONSTRUCTION, ADA LEVER HANDLE, SHOWERHEAD, 1.5 GPM (5.7 LPM). ASSE 1016 COMPLIANT. (6)	FD-3			(5)
SH-3	BARRIER-FREE COLUMN SHOWER ADA	BRADLEY MODEL COL-4C-HN CARRIER FREE COLUMN SHOWER, 304 STAINLESS STEEL WITH FLAGE BASE, VALVE MANIFOLD, GRAB BAR, SHOWERS HEADS, DIVERTER VALVE AND DRAIN FITTING .	BRADLEY MODEL HD PRESSURE BALANCING/TEMPERATURE(SET AT 110°F MAX.) VALVE SHOWER SYSTEM & TRIM. INTEGRAL SERVICE STOPS ALLOW WATER SHUTOFF AT VALVE FOR SERVICE. ADJUSTABLE STOP SCREW TO LIMIT HAND TURN. METAL LEVER HANDLE. 1 MODE SHOWERHEAD. 1.5 GPM FLOW RESTRICTOR. ASSE 1016/SME A112.1016, ADA APPROVED (6)	FD-3			(5)
MS-1	MOP SINK FLOOR MOUNTED	FLORESTONE "TERAZZO" #40, MOP RECEPTOR, 24"X24"X12", WITH GALVANIZED FLANGES, 3" DRAIN	CHICAGO #897-CP WALL MOUNTED FAUCET, WITH ATMOSPHERIC VACUUM BREAKER SPOUT WITH PAIL HOOK AND WALL BRACE, LEVER HANDLES, CHROME PLATED, INTEGRAL SUPPLY STOPS	INTEGRAL	INTEGRAL WITH STRAINER	INTEGRAL WITH FAUCET	PROVIDE 3-SLOT MOP HANGER AND 4 FT HOSE AT MOP SINK. (3) (5)
DF-1	DRINKING FOUNTAIN ADA - INDOOR	ELKAY LZSTL8WSSP BOTTLE FILLING STATION AND BI-LEVEL ADA COOLER, FILTERED, REFRIGERATED, STAINLESS STEEL FINISH, AND SHALL BE POWERED BY 115V/60HZ ELECTRICAL PLUG. MOUNTING PLATE, FILTER, AND TRAP INCLUDED.	INTEGRAL (6)	INTEGRAL	INTEGRAL	BRASSCRAFT SPEEDWAY #CR-1900-S2 SERIES LOOSEKEY ANGLE STOP	(5) (10) (14)
DF-2	DRINKING FOUNTAIN ADA - OUTDOOR	ELKAY VRCTL8WSK BOTTLE FILLING STATION AND BI-LEVEL ADA COOLER, NON-FILTERED, REFRIGERATED, STAINLESS STEEL FINISH, AND SHALL BE POWERED BY 115V/60HZ ELECTRICAL PLUG. MOUNTING PLATE, FILTER, AND TRAP INCLUDED.	INTEGRAL (6)	INTEGRAL	INTEGRAL	BRASSCRAFT SPEEDWAY #CR-1900-S2 SERIES LOOSEKEY ANGLE STOP	(5) (11) (14)
ES-1	EMERGENCY SHOWER	SEE POOL DRAWINGS FOR DETAILS.	SEE MISC SCHDULE FOR MIXING VALVE DETAILS.				
HB-1	HOSE BIBB	WOODFORD MODEL #24, NARROW WALL HYDRANT WITH MOUNTING BRACKETS, VACUUM BREAKER.	--	--	--	--	INSTALL AT 18" ABOVE FLOOR
HB-2	HOSE BIBB	WOODFORD MODEL #65, NARROW WALL HYDRANT WITH MOUNTING BRACKETS, VACUUM BREAKER, AND BRASS BOX AND HINGED COVER WITH CYLINDER LOCK	--	--	--	--	INSTALL AT 18" ABOVE FLOOR
HB-3	HOSE BIBB - ROOF	WOODFORD ROOF HYDRANT MODEL RHMC-MS WITH MOUNTING BRACKETS, BACKFLOW PREVENTER, AND CAST IRON HYDRANT SUPPORT.	--	--	--	--	INSTALL AT 18" ABOVE FLOOR

NOTES:

1. ALL SPECIFIED PRODUCTS ARE "OR EQUAL".
2. ALL WATER FLOW RESTRICTORS SHALL HAVE TITLE-24 CERTIFICATION.
3. PROVIDE "PROWRAP" WHITE SEAMLESS INSULATOR COVERS FOR DRAIN AND BOTH SUPPLY LINES.
4. ALL TRAPS SHALL BE IAPMO APPROVED. ALL FIXTURE TRAPS SHALL BE APPROVED BY THE CODE AUTHORITY HAVING JURISDICTION.
5. MOUNT TO MEET ACCESSIBILITY REQUIRED IN ACCORDANCE WITH ADA.
6. PROVIDE LEAD-FREE PRODUCT.
7. PROVIDE ASSE 1070 COMPLIANT THERMOSTATIC MIXING VALVE (WITH INTEGRAL CHECK AND STOPS) BELOW FIXTURE. SET TEMPERATURE AT 105 DGR. F. SEE TV-1,
8. APPROPRIATE ZURN CARRIER FOR WALL MOUNTED FIXTURE TO SUIT.
9. LOCATE THE FLUSH VALVE OPERATOR ON THE SIDE OF THE WATER CLOSET WITH THE WIDEST CLEARANCE.
10. MANUFACTURER TO INCLUDE WATER FILTER AND ACCESS PANEL OVER P-TRAP.
11. PROVIDE VANDAL-RESISTENT PRODUCTS.
12. ALL ADA FAUCETS AND FIXTURES SHALL BE COMPLIANT WITH CPC CHAPTER 15.
13. CALGREEN NOTE: COMMERCIAL TYPE PRODUCT USED IN RESIDENTIAL TYPE BUILDING.
14. FIXTURE TO BE PROVIDED WITH 115V/60HZ ELECTRICAL RECEPTACLE.

PUMP SCHEDULE

TAG	SERVICE	TYPE	MODEL NUMBER	GPM	TOTAL DYN. HEAD	EFFICIENCY %	MOTOR				REMARKS
							PHASE	POWER	RPM	VOLTAGE	
DWRP-1	DOMESTIC WATER RECIRCULATING PUMP	IN-LINE	BELL & GOSSETT MODEL #PL-36 BVS	5	26 FT	--	1	1/6 HP	3500	115	LEAD-FREE, ON TIMER
HWP-1	CHILER HOT WATER RECIRCULATING PUMP LARGE POOL SYSTEM	VERTICAL IN-LINE COUPLED DUPLEX	BELL & GOSSETT MODEL e-82 #3X3X9.5 SERIES	250	50 FT	75	3	5 HP 5 HP	1800	480	STAINLESS STEEL FITTED, CLOSED COUPLED TWIN IN-LINE CENTRIFUGAL PUMP WITH IPC VARIABLE SPEED DRIVE
HWP-2	CHILER HOT WATER RECIRCULATING PUMP ACTIVITY POOL SYSTEM	VERTICAL IN-LINE COUPLED DUPLEX	BELL & GOSSETT MODEL e-82 #3X3X9.5 SERIES	200	50 FT	75	3	5 HP 5 HP	1800	480	STAINLESS STEEL FITTED, CLOSED COUPLED TWIN IN-LINE CENTRIFUGAL PUMP WITH IPC VARIABLE SPEED DRIVE
SHWP-1	SOLAR HOT WATER RECIRCULATING PUMP LARGE POOL SYSTEM	VERTICAL IN-LINE COUPLED DUPLEX	GROUNDFOS CRE20-2 SERIES	110	50 FT	75	3	10 HP	3600	480	STAINLESS STEEL FITTED, CLOSED COUPLED TWIN IN-LINE CENTRIFUGAL PUMP WITH VARIABLE SPEED DRIVE
SHWP-2	SOLAR HOT WATER RECIRCULATING PUMP ACTIVITY POOL SYSTEM	VERTICAL IN-LINE COUPLED DUPLEX	GROUNDFOS CRE20-2 SERIES	110	50 FT	75	3	10 HP	3600	480	STAINLESS STEEL FITTED, CLOSED COUPLED TWIN IN-LINE CENTRIFUGAL PUMP WITH VARIABLE SPEED DRIVE
SHWP-3	SOLAR HOT WATER RECIRCULATING PUMP DOMESTIC HOT WATER SYSTEM	IN-LINE	BELL & GOSSETT MODEL #PL-36 BVS	5	26 FT	--	1	1/6 HP	3500	115	LEAD-FREE, ON TIMER

PUMP SCHEDULE NOTES:

1. CONNECTED TO A 316SS MANIFOLD, MOUNTED ON A STAINLESS STEEL SKID. SYSTEM INCLUDES CONTROL PANEL WITH VFD'S AND SURGE PROTECTION, DISCONNECT SWITCHES, N/E SWITCHES, ALARM CIRCUIT, PUMP RUN LIGHT, IO351B INPUT/OUTPUT MODULE. MANUFACTURER TO PROVIDE ONE-DAY START-UP.

MISCELLANEOUS EQUIPMENT SCHEDULE (1) (2)

TAG	EQUIPMENT	LOCATION	DESCRIPTION	OPERATING WEIGHT (LB)	ELECTR. REQ.	REMARKS
HPWH-1	HEAT PUMP WATER HEATER (4-UNITS)	ROOF	HEAT PUMP WATER HEATER RHEEM MODEL HPHD-135, 34.9 GPM, 6316 CFM AIR VOLUME, 135K BTUH, R134A REFRIGERANT (EACH UNIT), SOUND RATING 62 DBA, DIMENSIONS L 73.125", W 31.8125", H 52.875". SET HOT WATER TEMPERATURE TO 140°F, AMBIENT OPERATING RANGE 35°F FOR COLD WEATHER PACKAGE. PROVIDE 2000 GAL STORAGE	700 EACH 2,800 TOTAL	12.3 KW, 480 V, 3 PH, EACH	(2) (3)
CH-1	HEAT PUMP CHILLER (10 - FOR LARGE POOL) (8 - FOR ACTIVITY POOL)	ROOF	DVM HEAT PUMP CHILLER FOR POOL WATER HEATING SAMSUMG MODEL AG015KSVAJH/AA, 13,000 CFM AIR VOL., 67 GPM MAX. FLOW, 33.3 KW, 36A, MCA 40A, MOCP 50A, PER UNIT: 171,000 BTU/H HEATING CAPACITY @ 68°F OUTDOOR TEMPERATURE, (EACH UNIT). SOUND RATING 62 DB, 15 TONS, DIMENSIONS L 71", W 31", H 67".DISCHARGE HOT WATER TEMPERATURE 120 F DEGREES.	*TBD* *960 EACH 19,200 TOTAL*	*TBD* *18 KW, 480 V, 3 PH, EACH*	(2)
ET-1	EXPANSION TANK	MECH, ROOM	AMTROL THERM-X-TROL MODEL #ST-30V-C, □16.5", H 16.5"	188	--	(3)
ST-1, 2, 3,4	DOMESTIC HOT WATER STORAGE TANK	MECH, ROOM	VERTICAL STORAGE TANK INSULATED AND JACKETED RHEEM ST500A, 500 GALLONS CAPACITY, □46", H 94.5" WITH 2" OUTLET/INLET CONNECTIONS, 1765 LBS EMPTY.	5,935 W/WATER	--	(3)
HX-1	SOLAR HEAT EXCHANGER LARGE POOL	MECH, ROOM	BELL & GOSSETT GPX MODEL #P64 TITAMIUM PLATED HEAT EXCHANGER. RATED FOR 250.0 GPM, INLET TEMP. 78°F, OUTLET TEMP. 120°F, HEAT EXCHANGED 4,604,798.9 BTU/HR, PRESSURE DROP 5 PSI. NO.PLATES 147.	3,060 W/WATER	--	(2) (3)
HX-2	SOLAR HEAT EXCHANGER ACTIVITY POOL	MECH, ROOM	BELL & GOSSETT GPX MODEL #P64 TITAMIUM PLATED HEAT EXCHANGER. RATED FOR 110 GPM, INLET TEMP. 78°F, OUTLET TEMP. 120°F, HEAT EXCHANGED 3,683,839.1 BTU/HR, PRESSURE DROP 5 PSI. NO. PLATES 141.	3,008 W/WATER	--	(2) (3)
HX-3	HEAT EXCHANGER FOR ACTIVITY POOL SYSTEM	MECH, ROOM	BELL & GOSSETT GPX MODEL #P64 TITAMIUM PLATED HEAT EXCHANGER. RATED FOR 190.2 GPM, INLET TEMP. 78°F, OUTLET TEMP. 120°F, HEAT EXCHANGED 3,499,647,2 BTU/HR, PRESSURE DROP 5 PSI. NO. PLATES 110.	2,742 W/WATER	--	(2) (3)
HX-4	SOLAR THERMO SYSTEM HEAT EXCHANGER FOR ACTIVITY POOL	MECH, ROOM	BELL & GOSSETT GPX MODEL #P64 TITAMIUM PLATED HEAT EXCHANGER. RATED FOR 205.7 GPM, INLET TEMP. 78°F, OUTLET TEMP. 120°F, HEAT EXCHANGED 3,683,839.1 BTU/HR, PRESSURE DROP 5 PSI. NO. PLATES 141.	3,008 W/WATER	--	(2) (3)
HX-4	SOLAR THERMO SYSTEM HEAT EXCHANGER FOR ACTIVITY POOL	MECH, ROOM	BELL & GOSSETT GPX MODEL #P64 TITAMIUM PLATED HEAT EXCHANGER. RATED FOR 205.7 GPM, INLET TEMP. 78°F, OUTLET TEMP. 120°F, HEAT EXCHANGED 3,683,839.1 BTU/HR, PRESSURE DROP 5 PSI. NO. PLATES 141.	3,008 W/WATER	--	(2) (3)
MTV-1	MIXING VALVE	MECH, ROOM	*TBD POWERS HYDROGUARD XP MODEL #LFSH1432, HI-LO TYPE, ASSE 1017 COMPLIANT, LEAD-FREE BRASS BODY WITH CHECK-STOPS, ROUGH BRONZE FINISH*	112	--	
TV-1	TEMPERING MIXING VALVE	TOILET ROOM AT LAV'S	LEONARD MODEL 170-LF WITH INTEGRAL CHECK-STOPS, ROUGH BRONZE FINISH, MINIMUM FLOW 0.25 GPM MAXIMUM FLOW 4 GPM SET AT 110°F, LEAD FREE ASSE 1070 . PROVIDE WITH RECESS STAINLESS STEEL CABINET.	5	--	
TV-2	TEMPERING MIXING VALVE	EMERGENCY SHOWER	HAWS MODEL 9201H AXION THREMOSTATIC MIXING VALVE WITH INTEGRAL CHECK-STOPS, ROUGH BRONZE FINISH, MINIMUM FLOW 1 GPM. MAXIMUM FLOW 30 GPM SET AT 80°F, LEAD FREE ASSE 1071, ASNI Z358.1.	15	--	(2) (3)
WHA	WATER HAMMER ARRESTOR		PPP, MAINTENANCE FREE, WITH BRASS PISTON	--	--	
TP-1	TRAP PRIMER VALVE		PPP MODEL #P1-500, WITH DISTRIBUTION UNIT	--	--	
TP-2	TRAP PRIMER VALVE	MECH, ROOM	PPP MODEL #MP-500-115V, WITH DISTRIBUTION UNIT	--	6.3W,120V,60HZ	
BFP-1	BACKFLOW PREVENTER	ICEMAKER	WATTS MODEL #SD3, ASSE 1022, VENT TO NEAREST P-TRAP.	--	--	(2)

NOTES:

1. ALL PRODUCTS ARE "OR EQUAL".
2. INSTALL EQUIPMENT PER MANUFACTURER'S INSTRUCTIONS.
3. PROVIDE "ASME CONSTRUCTION" PRODUCT.

DRAIN SCHEDULE

TAG	LOCATION	TRAP		GRATE SIZE (IN)	MANUFACTURER AND MODEL NUMBER	REMARKS
		SIZE (IN)	MATERIAL			
FD-1	RESTROOM	2"	CI	6"x6"	ZURN #ZN-415S-P-Y WITH "TYPE S" STRAINER.	FLOOR DRAIN, LIGHT-DUTY, WITH SEDIMENT BUCKET AND HEEL-PROOF GRATE. PROVIDE TRAP PRIMER (1) (2)
FD-2	MECH ROOM	3"	CI	□6"	ZURN #FD1-NH3-R6-SS-P	FLOOR DRAIN, LIGHT-DUTY, NO-HUB CAST IRON BODY, SS ROUND GRATE. PROVIDE TRAP PRIMER
FD-3	SHOWERS	3"	CI	□7"	ZURN #Z415-BZ1 BODY ASSEMBLY W/ "TYPE B" STRAINER AND EZ1TM TECHNOLOGY	SHOWER DRAIN, LIGHT-DUTY, WITH SEDIMENT BUCKET AND HEEL-PROOF GRATE. PROVIDE TRAP PRIMER
FS-1	MECH ROOM	3"	SS	12"x12"	ZURN #Z1749-K 12"X12" SANI-FLOR RECEPTOR WITH 4" SUMP DEPTH AND ANCHOR FLANGE. A.R.E	FLOOR DRAIN, HEAVY-DUTY, WITH SEDIMENT BUCKET AND HEEL-PROOF GRATE. PROVIDE TRAP PRIMER
TD-1	MECH ROOM	2"	CI	60"x6"	ZURN #Z890 SANI-FLO LINEAR TRENCH DRAIN SYSTEM	60"x7" MODULAR CHANNEL SECTIONS,16 GA. STAINLESS STEEL. ZURN 6" WIDE STANDARD FS GRATES ARE PROVIDED, STAINLESS STEEL.
RD-1/OF-1	ROOF DRAIN	3"/4"	CI	□12"	ZURN #Z164 ROOF DRAIN	12" DIAMETER COMBINATION MAIN ROOF AND OVERFLOW DRAIN WITH LOW SILHOUETTE DOMES AND DOUBLE TOP-SET® DECK PLATE. DO NOT PROVIDE DOME TO DRAIN IN DECK AREAS.
SD-1	SCUPPER DRAIN	3"	CI	□12"	ZURN #Z1614 OBLIQUE SCUPPER DRAIN	10"X3" SCUPPER DRAIN, PLANIN BRONZE BODY WITH GASKET , PLAIN BROZE GRATE WITH INTEGRAL MEMBRANE CLAMP. COORDINAE WITH ARCHITECTUREAL GUTTERS SYSTEM.
DS-1	DOWNSPOUT	--	ALUMINUM	4"/6"	ZURN #ZF199-SAN	DOWNSPOUT NOZZLE, ALUMINUM BODY, GASKET FOR CAST IRON.
WCO	--	--	--	5"/7"	ZURN #ZANB-1468	WALL CLEANOUT
FCO	--	--	--	□6"	ZURN #ZN-1400 (LIGHT TRAFFIC AREAS) ZURN #ZN-1400 EXTRA HEAVY DUTY	FLOOR CLEANOUT FLOOR CLEANOUT FOR (ON FORKLIFT TRAFFIC AREAS)
GCO	--	--	--	□9"	ZURN #Z-1474	GRADE CLEANOUT

NOTES:

1. PROVIDE ITEM WITH SEEPAGE HOLES.
2. PROVIDE ITEM WITH SUMP RECEIVER AND SEDIMENT BUCKET.

SOLAR THERMAL SYSTEM

TAG	LOCATION	DESCRIPTION	ITEM	MOTOR			
				PHASE	POWER	RPM	VOLTAGE
SSP-1	MECH ROOM	SOLAR THERMAL RECIRCULATING PUMP	GRUNDFOS UPS215-42SU, IN-LINE PUMP TYPE TOTAL DYNAMIC HEAD 15FT, 5 GPM	3	1/25	1700	115
SST-1	MECH ROOM	SOLAR PRE-HEAT TANK	200 GAL TANK, ENAMELED STEEL, 4" POLYURETHANE FOAM INSULATION FOR DOMESTIC WATER.	---	---	---	---
SA-1	ROOF	SOLAR THERMO/PV PANELS	DUAL-SUN, SPRING MODEL SOLAR THERMAL AND PV COLLECTOR FOR HOT WATER, EACH 66"X40"X1.5", TOTAL 17.59 SF. WEIGHT 60 LBS. FLUID CAPACITY 1.33 GALS. INSTALLED ON LANDSCAPE POSITION SOUTH WEST FACING AT 15 DEG TILT. MIN. 280 PANELS	---	---	---	---

NOTES:

1. ALL PRODUCTS ARE "OR EQUAL".
2. INSTALL EQUIPMENT PER MANUFACTURER'S INSTRUCTIONS.

els architecture+ urban design
2040 Addison St, Berkeley, CA 94704
510.549.2929 | elsarch.com

PROJECT:

PIEDMONT COMMUNITY POOL

777 MAGNOLIA AVENUE PIEDMONT, CA 94611

CLIENT:

CITY OF PIEDMONT

120 VISTA AVENUE PIEDMONT, CA 94611

PROJECT TEAM:

ARCHITECT:
ELS ARCHITECTURE AND URBAN DESIGN
2040 Addison Street
Berkeley, CA 94704
P: 510.549.2929

CIVIL ENGINEER:
BKF ENGINEERS
4670 Willow Road, Suite 250
Pleasanton, CA 94588
P: (925) 396-7704

LANDSCAPE ARCHITECT:
SWA
2200 Bridgeway
Sausalito, CA 94965
P: 415.332.5100

STRUCTURAL ENGINEER:
FORELL/ELSESSER ENGINEERS, INC.
160 Pine Street, 6th Floor
San Francisco, CA 94111
P: 415.837.0700

MEP / FIRE PROTECTION:
GUTTMANN & BLAEVOET
1620 Montgomery Street, Suite 230
San Francisco, CA 94111
P: 415.655.4000

AQUATICS:
AQUATICS DESIGN GROUP
2226 Faraday Avenue
Carlsbad, CA 92008
P: 760.438.8400

SPECIFICATIONS
TOPFLIGHT SPECS
49 Geary Street, Suite 230
San Francisco, CA 94108-5748
P: 415.546.6033

REVISION

NUMBER	DATE	DESCRIPTION

ISSUE:
100% DESIGN DEVELOPMENT

DATE:
APRIL 30, 2022

STAMP:

NOT FOR CONSTRUCTION

SHEET TITLE:
SCHEDULES

SHEET NUMBER:
P501

POWER LEGEND

	SINGLEPLEX RECEPTACLE OUTLET: 125V, 20A, MOUNT AT 18"AFF TO CENTER OF OUTLET, TYP. UON
	DUPLEX RECEPTACLE OUTLET: 125V, 20A, MOUNT AT 18"AFF TO CENTER OF OUTLET, TYP. UON
	QUADRIPLEX RECEPTACLE OUTLET: 125V, 20A MOUNT AT 18"AFF TO CENTER OF OUTLET, TYP. UON
	CONTROLLED DUPLEX RECEPTACLE OUTLET: 125V, 20A, TOP HALF SWITCHED VIA OCCUPANCY SENSOR OR VIA TIME SWITCH IN OPEN OFFICES. (PLUG LOAD CONTROL) MOUNT AT 18"AFF TO CENTER OF OUTLET, UON
	HALF-CONTROLLED QUADRUPLEX RECEPTACLE OUTLET: 125V, 20A, (ONE DUPLEX CONTROLEMA, ONE DUPLEX UNCONTROLLED). MOUNT AT 18"AFF TO CENTER OF OUTLET, UON
	COMBINATION 120V/USB DUPLEX RECEPTACLE
	FLOOR MOUNTED POWER OUTLET. FIELD VERIFY EXACT LOCATION AND TYPE. 125V, 20A
	FLOOR MOUNTED POWER QUADRUPLEX OUTLET. FIELD VERIFY EXACT LOCATION AND TYPE. 125V, 20A
	FLUSH FLOOR MOUNTED POWER OUTLET. FIELD VERIFY EXACT LOCATION AND TYPE. 125V, 20A
	COMBINATION POWER, TELE/DATA & AUDIO VISUAL FLUSH FLOOR MOUNTED SPLIT WIRED DUPLEX OUTLET, FIELD VERIFY EXACT LOCATION AND TYPE. 125V, 20A.
	COMBINATION POWER, TELE/DATA & AUDIO VISUAL FLUSH FLOOR MOUNTED HALF CONTROLLED QUADRUPLEX OUTLET. FIELD VERIFY EXACT LOCATION AND TYPE. 125V, 20A
	CEILING MOUNTED DUPLEX RECEPTACLE OUTLET: 125V, 20A
	CEILING MOUNTED QUADRUPLEX RECEPTACLE OUTLET: 125V, 20A
	SPECIAL PURPOSE RECEPTACLE OUTLET: RATING AS INDICATED
	POWER/TELECOM WIREMOLD SURFACE RACEWAY, LENGTH APPROXIMATELY AS SHOWN
$a	CONTROL SWITCH, SUBSCRIPT(S) INDICATES ASSOCIATED LIGHT FIXTURE(S) / EQUIPMENT CONTROLLED. NO SUBSCRIPT INDICATES ALL LIGHT FIXTURE(S) / EQUIPMENT CONTROLLED INSIDE ROOM. MOUNT AT +42" AFF, TYP. UNLESS OTHERWISE NOTED.
$K	KEYED TYPE SWITCH
$3	THREE WAY SWITCH
$OV	OVERRIDE CONTROL SWITCH. PROVIDE LABEL INDICATING "OVERRIDE LTG/REC CONTROL".
D	DIMMER SYSTEM LIGHT CONTROL
D3	DIMMER SYSTEM LIGHT CONTROL - 3 WAY
P	ADA DOOR PUSHPAD
	PUSHBUTTON
B	BELL

RECEPTACLE SUBSCRIPT LEGEND

a	C	=	ABOVE COUNTER
	#	=	SPECIAL MOUNTING HEIGHT
	D	=	DEDICATED CIRCUIT
	G	=	GROUND FAULT CIRCUIT INTERRUPTER
	IG	=	ISOLATED GROUND
	WP	=	WEATHERPROOF
	a	=	SUBSCRIPT(S) INDICATES SWITCH CONTROL
	6	=	NUMBER INDICATES CIRCUIT NUMBER
	T	=	TAMPER RESISTANT TYPE OUTLET
	CP	=	CONDENSATE PUMP RECEPTACLE, COORDINATE MOUNTING WITH MECH

LIGHTING LEGEND

	LIGHTING FIXTURE DOWNLIGHT, CEILING MOUNTED
	LIGHTING FIXTURE, WALL MOUNTED
	LIGHTING FIXTURE LINEAR, LENGTH AS SHOWN, CEILING MOUNTED
	LIGHTING FIXTURE, LENGTH AS SHOWN, WALL MOUNTED
OR EM EM	EMERGENCY LIGHTING FIXTURE
	WALL WASHER, CEILING MOUNTED
	LIGHTING FIXTURE(S), POLE MOUNTED
F1 a 2	FIXTURE DESIGNATION: LIGHTING FIXTURE TYPE INDICATES SWITCH CONTROL INDICATES CIRCUITING
DZP	DZP = DAYLIGHTING ZONE PRIMARY DZS = DAYLIGHTING ZONE SECONDARY SZ = DAYLIGHTING ZONE SKYLIGHT
	EXIT SIGN, WALL MOUNTED SHADING = ILLUMINATED FACE ARROWS AS SHOWN
	EXIT SIGN, CEILING MOUNTED P = PENDANT MOUNTED SHADING = ILLUMINATED FACE ARROWS AS SHOWN
P	EXIT SIGN, CEILING MOUNTED P = PENDANT MOUNTED SHADING = ILLUMINATED FACE ARROWS AS SHOWN
	EXIT SIGN, LOW LEVEL, RECESSED IN WALL SHADING = ILLUMINATED FACE ARROWS AS SHOWN
a	OCCUPANCY SENSOR, WALL MOUNTED. DUAL OR SINGLE RELAY PER PLANS. SUBSCRIPT(S) INDICATES FIXTURE(S) CONTROLLED.
D	COMBINATION DIMMER & OCCUPANCY SENSOR, WALL MOUNTED
a	OCCUPANCY SENSOR, CEILING MOUNTED. SUBSCRIPT(S) INDICATES FIXTURE(S) CONTROLLED. H - INDICATES HALLWAY TYPE SENSOR.
a	DAYLIGHTING PHOTOCELL. SUBSCRIPT(S) INDICATES LIGHTING CONTROLLED.
PC	OUTDOOR PHOTOCELL SENSOR

DATA AND AV DEVICE LEGEND

	TELEPHONE/DATA OUTLET, MOUNT AT 18" AFF TO CENTER OF OUTLET, TYP. UON, PROVIDE DOUBLE-GANG BOX WITH 1"C TO ABOVE ACCESSIBLE CEILING SPACE. PROVIDE PULL CORD.
C	DATA OUTLET AT CEILING, PROVIDE SINGLE-GANG BOX/SINGLE GANG MUD RING/STRING WITH 1" C.
	DATA OUTLET, MOUNT AT 18" AFF TO CENTER OF OUTLET, TYP. UON, PROVIDE DOUBLE-GANG BOX/SINGLE EXTENDED GANG MUDRING/STRINGS WITH 1"C TO ABOVE ACCESSIBLE CEILING SPACE.
W	TELEPHONE OUTLET, "W" INDICATES WALL PHONE, MOUNT AT 45" AFF TO TOP OF OUTLET, UON, PROVIDE SINGLE-GANG BOX/SINGLE-GANG MUD-RING/STRING WITH 1"C TO ABOVE ACCESSIBLE CEILING SPACE.
TV	TELEVISION OUTLET, MOUNT AT 18" AFF TO CENTER OF OUTLET, PROVIDE SINGLE-GANG BOX WITH 1"C TO ABOVE ACCESSIBLE CEILING SPACE.

POWER AND SIGNAL DEVICE LEGEND

	ELECTRICAL EQUIPMENT
	CONTROL PANEL SURFACE MOUNTED EXAMPLES: LCP, SECURITY, BMS
	CONTROL PANEL RECESSED MOUNTED EXAMPLES: LCP, SECURITY, BMS
480Y/277V 208Y/120V	PANELBOARD SURFACE MOUNTED
480Y/277V 208Y/120V	PANELBOARD RECESSED MOUNTED
	BUSWAY RISER WITH PLUG IN UNIT
	BUSWAY HORIZONTAL
	CABLE TAP BOX
T	STEP DOWN TRANSFORMER
	HEAVY DUTY DISCONNECT SWITCH
	HEAVY DUTY DISCONNECT SWITCH WITH FUSE
	MOTOR STARTER
	COMBINATION MOTOR STARTER/DISCONNECT SWITCH
V	VARIABLE FREQUENCY DRIVE
G	GENERATOR
CR	ACCESS CONTROL CARD READER BACK BOX
$xx	MS = MOTORIZED SHADE CONTROLLER (FBO) PS = PROJECTION SCREEN CONTROLLER (FBO)
$T	THERMAL OVERLOAD/DISCONNECT SWITCH
EPO	RED PUSH BUTTON MUSHROOM TYPE WITH CLEAR LEXAN PROTECTIVE SHROUD COVER. EPO = EMERGENCY POWER OFF
M	MOTOR CONNECTION
J J	JUNCTION BOX, WALL / CEILING MOUNTED
	J-HOOK PATHWAY
	GROUND BUS BAR
	GROUND ROD
	CIRCUIT BREAKER
	SWITCH AND FUSE
	DRAWOUT TYPE CIRCUIT BREAKER
	DRAWOUT TYPE SWITCH AND FUSE
CB	CIRCUIT BREAKER IN ENCLOSURE
M	CURRENT TRANSFORMER AND KWH METER
GFP	GROUND FAULT PROTECTION RELAY
SPD	SURGE PROTECTIVE DEVICE
	NORMALLY OPEN CONTACT
	NORMALLY CLOSED CONTACT
	TRANSFORMER
N E L	AUTOMATIC TRANSFER SWITCH

ABBREVIATIONS

AC	ABOVE COUNTER	JB	JUNCTION BOX
AIC	AMPERES INTERRUPTING CAPACITY	KV	KILOVOLT
ANN	ANNUNCIATOR	KVA	KILOVOLT - AMPERE
AM	AMMETER	KW	KILOWATT
A OR AMP	AMPERE	LF	LINEAR FEET
AFCI	ARC FAULT CURRENT INTERUPT	LTG	LIGHTING
AFF	ABOVE FINISHED FLOOR	MAX	MAXIMUM
APPROX	APPROXIMATELY	MCC	MOTOR CONTROL CENTER
ARCH	ARCHITECTURAL	MCP	MOTOR CIRCUIT PROTECTOR
ATS	AUTOMATIC TRANSFER SWITCH	MECH	MECHANICAL
AUTO	AUTOMATIC	MTD	MOUNTED
AUX	AUXILIARY	MTG	MOUNTING
AV	AUDIO VISUAL	NEUT	NEUTRAL
BLDG	BUILDING	NC	NORMALLY CLOSED
C	CLOCK OR CONDUIT	NIC	NOT IN CONTRACT
CAB	CABINET	No	NUMBER
CAP	CAPACITOR	NO	NORMALLY OPEN
CAT	CATALOG	NOM	NOMINAL
CB	CIRCUIT BREAKER	NP	NAMEPLATE
CCTV	CLOSED CIRCUIT TELEVISION	NTS	NOT TO SCALE
CLF	CURRENT LIMITING FUSE	OC	"6" OVERCOUNTER OR BACKSPLASH
CLG	CEILING	OD	OUTSIDE DIAMETER
CKT	CIRCUIT	OL	OVERLOAD
COMB	COMBINATION	P	POLE
CONC	CONCRETE	PA	PUBLIC ADDRESS
CONN	CONNECTION	PB	PULL BOX or PUSHBUTTON
CONT	CONTACTOR	PF	POWER FACTOR
CONTR	CONTRACTOR	PH	PHASE
CT	CURRENT TRANSFORMER	PL	PILOT LIGHT
DB	DECIBEL	PNL	PANEL
DC	DIRECT CURRENT	PR	PAIR
DET	DETAIL	PRI	PRIMARY
DIA	DIAMETER	PVC	POLYVINYL CHLORIDE
DIAG	DIAGRAM	(R)	RELOCATED
DIM	DIMENSION	REC	RECESSED or RECEPTACLE
DISC	DISCONNECT	REF	REFERENCE
DIST	DISTRIBUTION	REG	REGULATOR
DIV	DIVISION	REQD	REQUIRED
DM	DAMPER MOTOR	REV	REVISION
DN	DOWN	RM	ROOM
DPDT	DOUBLE POLE DOUBLE THROW	RR	REMOVE AND REINSTALL
DPST	DOUBLE POLE SINGLE THROW	SCHED	SCHEDULE
DWG	DRAWING	SD	SMOKE DETECTOR
DZP	DAYLIGHTING ZONE PRIMARY	SEC	SECONDARY or SECURITY
DZS	DAYLIGHTING ZONE SECONDARY	SN	SOLID NEUTRAL
EA	EACH	SOL	SOLENOID
EC	ELECTRICAL CONTRACTOR	SP	SPARE
ELECT	ELECTRICAL	SPC	SPACE
EL	ELEVATION	SPDT	SINGLE POLE DOUBLE THROW
EM	EMERGENCY	SPST	SINGLE POLE SINGLE THROW
ENCL	ENCLOSURE	SPEC	SPECIFICATION
EQUIP	EQUIPMENT	SUPV	SUPERVISORY
EWC	ELECTRIC WATER COOLER	SQ.FT.	SQUARE FOOT
EWH	ELECTRIC WATER HEATER	STA	STATION
(E)	EXISTING	STD	STANDARD
EXP	EXPOSED	SUSP	SUSPENDED
FA	FIRE ALARM	SW	SWITCH
FC	FOOTCANDLE	SWBD	SWITCHBOARD
FIXT	FIXTURE	SWGR	SWITCHGEAR
FIG	FIGURE	SYNC	SYNCHRONIZATION
FL	FLOOR	SYST	SYSTEM
FLA	FULL LOAD AMPERE	SZ	DAYLIGHTING ZONE SKYLIGHT
FLEX	FLEXIBLE	T or TEL	TELEPHONE
FLUOR	FLUORESCENT	TEMP	TEMPERATURE
FT	FOOT OR FEET	TOL	THERMAL OVERLOAD
FUT	FUTURE	TPS	TWISTED PAIR SHIELDED
GEN	GENERATOR	TTC	TELEPHONE TERMINAL CABINET
GFI	GROUND FAULT CIRCUIT INTERRUPTER	TV	TELEVISION
		(TYP.)	TYPICAL
HGT	HEIGHT	UH	UNIT HEATER
HID	HIGH INTENSITY DISCHARGE	UV	UNIT VENTILATOR
HORIZ	HORIZONTAL	V	VOLT
HP	HORSEPOWER	VA	VOLT AMPERE
HTR	HEATER	VERT	VERTICAL
HVAC	HEATING, VENTILATION AND AIR CONDITIONING	VEST	VESTIBULE
		VM	VOLTMETER
HV	HIGH VOLTAGE	VR	VERMIN RESISTANT
HZ	HERTZ	VOL	VOLUME
IMP	IMPEDANCE	W	WATT
IN	INCH OR INCHES	WP	WEATHER PROOF
		XP	EXPLOSION PROOF
		XFMR	TRANSFORMER

DRAWING LIST

Sheet Number	Sheet Name
E001	LEGEND, SYMBOLS, GENERAL NOTES & DRAWING LIST
E101	SITE PLAN - POWER
E102	SITE PLAN - LIGHTING
E201	FLOOR PLAN - LEVEL 1
E205	ROOF PLAN - POWER
E301	FLOOR PLAN LEVEL 1 - LIGHTING
E305	ROOF PLAN - LIGHTING
E501	SINGLE LINE DIAGRAM
E601	LIGHTING FIXTURE SCHEDULE
E602	LIGHTING CONTROL DIAGRAM
E701	DETAILS

GENERAL NOTES

A. DRAWINGS ARE DIAGRAMMATIC AND INDICATE GENERAL ARRANGEMENT OF SYSTEMS AND WORK INCLUDED. FOLLOW DRAWINGS IN LAYING OUT WORK AND CHECK DRAWINGS OF OTHER TRADES RELATING TO WORK TO VERIFY SPACE IN WHICH WORK WILL BE INSTALLED. MAINTAIN HEADROOM AND MINIMUM CODE REQUIRED WORKING CLEARANCES AT ALL TIMES.

B. HASH MARKS INDICATING NUMBER OF CONDUCTORS ARE SHOWN ONLY FOR HOMERUNS. CONTRACTOR IS RESPONSIBLE FOR INSTALLING CONDUCTORS AS REQUIRED TO ACHIEVE FUNCTIONS INDICATED.

C. ALL EQUIPMENT, DEVICES AND LIGHT FIXTURES LOCATED OUTDOORS SHALL BE UL LISTED FOR WET LOCATIONS OR BE ENCLOSED IN NEMA 3R ENCLOSURE.

D. WHERE WIRE SIZES ARE INDICATED ON THE PLANS FOR INDIVIDUAL CIRCUITS, THE WIRE SIZE INDICATED SHALL BE CARRIED THROUGH TO CIRCUIT TERMINATION POINT UON.

E. ALL POWER, LIGHTING AND RECEPTACLE BRANCH CIRCUITS, AND ALL FEEDERS SHALL INCLUDE A GROUND CONDUCTOR SIZED ACCORDING TO CEC.

F. PROVIDE ACOUSTICAL TREATMENT FOR ALL CONDUIT AND OUTLET BOX PENETRATIONS IN ACOUSTICAL PARTITIONS.

G. REFER TO ARCHITECTURAL DRAWINGS FOR EXACT CEILING TYPE AND OCATIONS OF FIXTURES AND OTHER CEILING DEVICES PRIOR TO ROUGH-IN.

H. PROVIDE SEPARATE NEUTRAL CONDUCTOR FOR ALL DIMMING CIRCUITS AND RECEPTACLE CIRCUITS FOR COMMUNICATIONS, SECURITY AND SOUND EQUIPMENT.

I. CONTRACTOR SHALL VERIFY THE EXACT LOCATION OF ALL MECHANICAL, PLUMBING AND ALL OTHER USER EQUIPMENT REQUIRING ELECTRICAL CONNECTIONS PRIOR TO ANY WORK.

J. CONTRACTOR SHALL EXTEND WIRING FROM ALL JUNCTION BOXES, SWITCHES, ETC. AND MAKE FINAL CONNECTION AS REQUIRED TO ALL EQUIPMENT REQUIRING ELECTRICAL CONNECTIONS.

K. ALL MOUNTING HEIGHTS SHOWN ARE TO CENTER LINE OF OUTLET OR DEVICE AND SHALL APPLY UNLESS INDICATED OTHERWISE. SEE ARCHITECTURAL ELEVATIONS FOR EXACT LOCATIONS.

L. CONTRACTOR SHALL COORDINATE THE LOCATION OF ALL WALL OUTLET BOXES FOR SWITCHES, RECEPTACLES ETC. WITH TACK BOARDS, CABINETS,CHALKBOARDS, FURNITURE, EQUIPMENTS ETC. TO AVOID CONFLICT.

M. WHERE ELECTRIC MOTORS OR HEATERS ARE INSTALLED IN HUNG CEILING, PROVIDE DISCONNECT SWITCH IN HUNG CEILING WITHIN REACH FROM ACCESS POINT.

N. PROVIDE PULL WIRE IN EACH RACEWAY RUN OVER 10 FEET IN LENGTH, IN WHICH PERMANENT WIRING IS NOT INSTALLED.

O. SEE MECHANICAL DRAWINGS FOR ADDITIONAL CONNECTION REQUIREMENTS TO CONTROL PANELS AND TRANSFORMERS, 120V FOR CONTROL SYSTEM, CONTROL SYSTEM, EP AND PE SWITCHES, TIME CLOCK, VALVES, RELAYS LOCATION, ETC. INDICATED ON CONTROL WIRING DIAGRAMS. VERIFY FINAL CONTROL WIRING REQUIREMENTS WITH DIVISION 23 PRIOR TO ANY WORK AND PROVIDE ALL NECESSARY WIRING, DEVICES AND CONNECTIONS AS REQUIRED.

P. LIGHTING, POWER, TELEPHONE AND COMMUNICATIONS OUTLETS SHALL NOT BE PLACED BACK TO BACK, OUTLETS SHALL BE SEPARATED MIN. OF 24" IN FIRE-RATED WALLS AND MIN. 18" IN NON-RATED WALLS.

Q. ALL CONDUIT SHALL BE RUN CONCEALED IN HUNG CEILING SPACE, IN WALLS, OR UNDER FLOOR, UNLESS SPECIFICALLY INDICATED OTHERWISE.

R. PROVIDE PULLBOXES WHEREVER NECESSARY TO FACILITATE PULLING OF CONDUCTORS. COORDINATE LOCATIONS OF BOXES WITH OTHER TRADES TO AVOID CONFLICT, PULLBOXES SHALL BE ACCESSIBLE. THE SIZE OF EACH PULLBOX SHALL COMPLY WITH CEC REQUIREMENTS.

S. OUTLET BOXES FOR FIXTURES RECESSED IN HUNG CEILING SHALL BE ACCESSIBLE THROUGH OPENING CREATED BY REMOVAL OF FIXTURES.

T. USE OF AC OR MC TYPE CABLES FOR BRANCH CIRCUIT WIRING ARE PERMISSABLE IN ALL AREAS.

U. ALL ELECTRIC MATERIAL SHALL BE LISTED BY "UL" FOR THE TYPE OF APPLICATION AND "UL" LABEL SHALL APPEAR ON ALL ELECTRICAL EQUIPMENT.

V. WHERE RECEPTACLES WITH GFCI LOCATED ADJACENT TO A SINK, MOUNT 6" ABOVE COUNTER OR BACKSPLASH.

W. FIRE ALARM SYSTEM IS A DESIGN-BUILD WORK. FIRE ALARM SYSTEM VENDOR SHALL PROVIDE DRAWINGS SUITABLE FOR PERMIT AND APPROVAL BY LOCAL FIRE MARSHAL. PROVIDE SUBMITTAL DRAWINGS FOR REVIEW BEFORE ORDERING ANY COMPONENTS. THE FIRE ALARM DEVICES SHOWN ARE FOR COORDINATION ONLY AND DOES NOT DEPICT ACTUAL QUANTITY REQUIRED. PROVIDE ADDITIONAL DEVCES TO MEET CODE OR PER FIRE MARSHAL'S COMMENTS. DEVICES SHALL BE COMPATIBLE WITH THE (E) FIRE ALARM SYSTEM IN THE BUILDING. PROVIDE FULL COMMISSIONING SERVICES.

X. PRIOR TO FINAL ELECTRICAL APPROVAL, A SELECTIVE COORDINATION STUDY MUST BE PERFORMED BY A 3RD. PARTY TESTING AGENCY, AND REVIEWED, APPROVED AND SIGNED BY ENGINEER OF RECORD WITH LETTER STATING HE HAS REVIEWED AND AGREES WITH THE STUDY.

Y. ALL EQUIPMENT RATED AT 1000 AMPERES OR GREATER SHALL BE TESTED IN CONFORMANCE WITH UL STANDARD 869 OR 891 FOR INSULATION BREAKDOWN PRIOR TO BEING ENERGIZED; THE TEST SHALL BE PERFORMED BY TESTING FACILITY ACCEPTABLE TO THE AUTHORITY HAVING JURISDICTION AND THE BUILDING OFFICIAL, CEC 230.95(C)

els architecture+ urban design
2040 Addison St, Berkeley, CA 94704
510.549.2929 | elsarch.com

PROJECT:

PIEDMONT COMMUNITY POOL

777 MAGNOLIA AVENUE PIEDMONT, CA 94611

CLIENT:

CITY OF PIEDMONT

120 VISTA AVENUE PIEDMONT, CA 94611

PROJECT TEAM:

ARCHITECT:
ELS ARCHITECTURE AND URBAN DESIGN
2040 Addison Street
Berkeley, CA 94704
P: 510.549.2929

CIVIL ENGINEER:
BKF ENGINEERS
4670 Willow Road, Suite 250
Pleasanton, CA 94588
P: (925) 396-7704

LANDSCAPE ARCHITECT:
SWA
2200 Bridgeway
Sausalito, CA 94965
P: 415.332.5100

STRUCTURAL ENGINEER:
FORELL/ELSESSER ENGINEERS, INC.
160 Pine Street, 6th Floor
San Francisco, CA 94111
P: 415.837.0700

MEP / FIRE PROTECTION:
GUTTMANN & BLAEVOET
1620 Montgomery Street, Suite 230
San Francisco, CA 94111
P: 415.655.4000

AQUATICS:
AQUATICS DESIGN GROUP
2226 Faraday Avenue
Carlsbad, CA 92008
P: 760.438.8400

SPECIFICATIONS
TOPFLIGHT SPECS
49 Geary Street, Suite 230
San Francisco, CA 94108-5748
P: 415.546.6033

REVISION

NUMBER	DATE	DESCRIPTION

ISSUE:
100% DESIGN DEVELOPMENT

DATE:
APRIL 30, 2022

STAMP:

NOT FOR CONSTRUCTION

SHEET TITLE:

LEGEND, SYMBOLS, GENERAL NOTES & DRAWING LIST

SHEET NUMBER:

E001

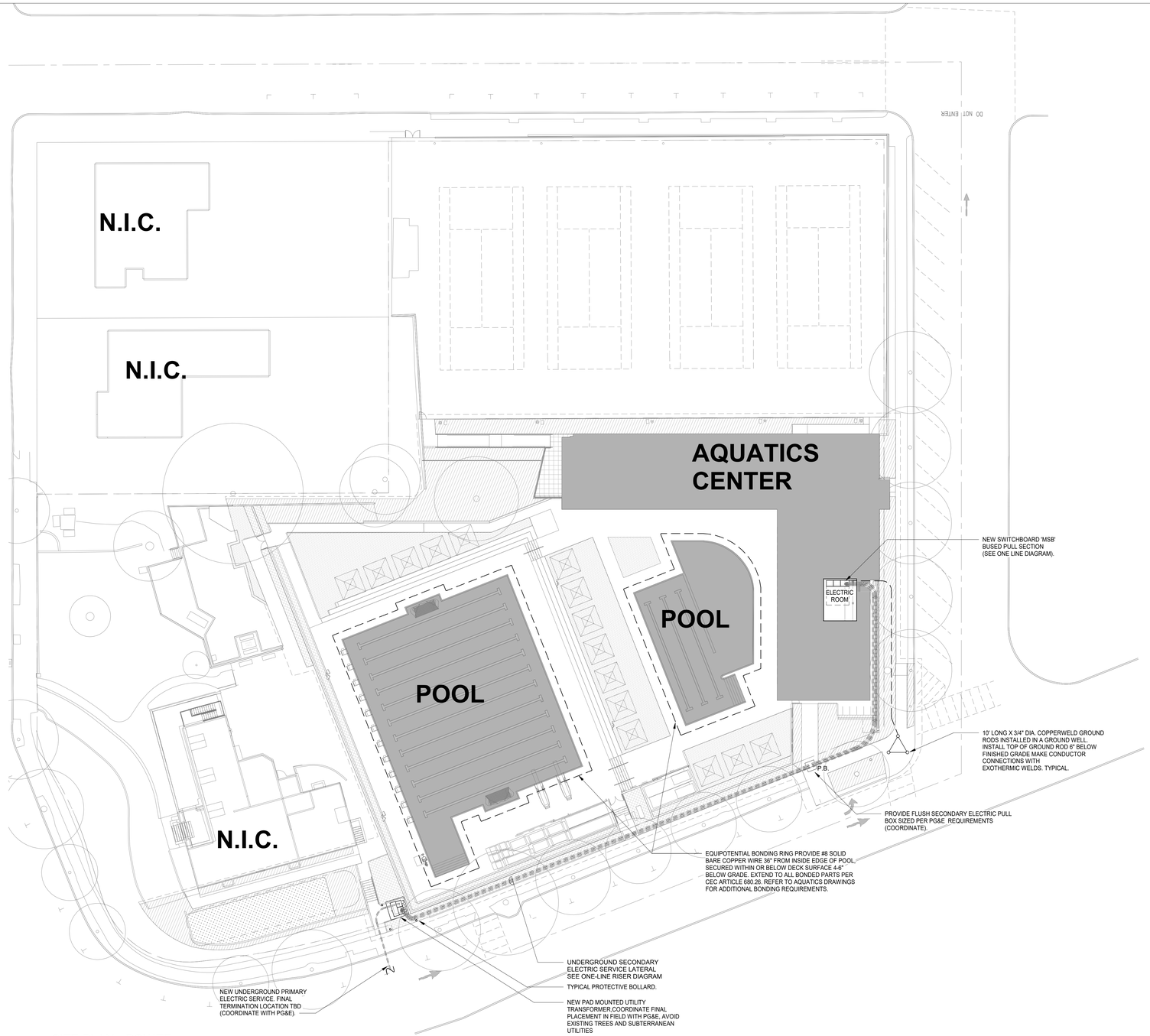

1 SITE PLAN - POWER
1" = 20'-0"

KEYNOTES

GENERAL NOTES

1. PRIOR TO COMMENCING ANY UNDERGROUND EXCAVATIONS CONTACT "CALL BEFORE YOU DIG" DIAL 811

USA NORTH 811 Call Before You Dig

els architecture+ urban design
2040 Addison St, Berkeley, CA 94704
510.549.2929 | elsarch.com

PROJECT:

PIEDMONT COMMUNITY POOL

777 MAGNOLIA AVENUE PIEDMONT, CA 94611

CLIENT:

CITY OF PIEDMONT

120 VISTA AVENUE PIEDMONT, CA 94611

PROJECT TEAM:

ARCHITECT:
ELS ARCHITECTURE AND URBAN DESIGN
2040 Addison Street
Berkeley, CA 94704
P: 510.549.2929

CIVIL ENGINEER:
BKF ENGINEERS
4670 Willow Road, Suite 250
Pleasanton, CA 94588
P: (925) 396-7704

LANDSCAPE ARCHITECT:
SWA
2200 Bridgeway
Sausalito, CA 94965
P: 415.332.5100

STRUCTURAL ENGINEER:
FORELL/ELSESSER ENGINEERS, INC.
160 Pine Street, 6th Floor
San Francisco, CA 94111
P: 415.837.0700

MEP / FIRE PROTECTION:
GUTTMANN & BLAEVOET
1620 Montgomery Street, Suite 230
San Francisco, CA 94111
P: 415.655.4000

AQUATICS:
AQUATICS DESIGN GROUP
2226 Faraday Avenue
Carlsbad, CA 92008
P: 760.438.8400

SPECIFICATIONS
TOPFLIGHT SPECS
49 Geary Street, Suite 230
San Francisco, CA 94108-5748
P: 415.546.6033

REVISION

NUMBER	DATE	DESCRIPTION

ISSUE:
100% DESIGN DEVELOPMENT

DATE:
APRIL 30, 2022

STAMP:

NOT FOR CONSTRUCTION

SHEET TITLE:
SITE PLAN - POWER

SHEET NUMBER:
E101

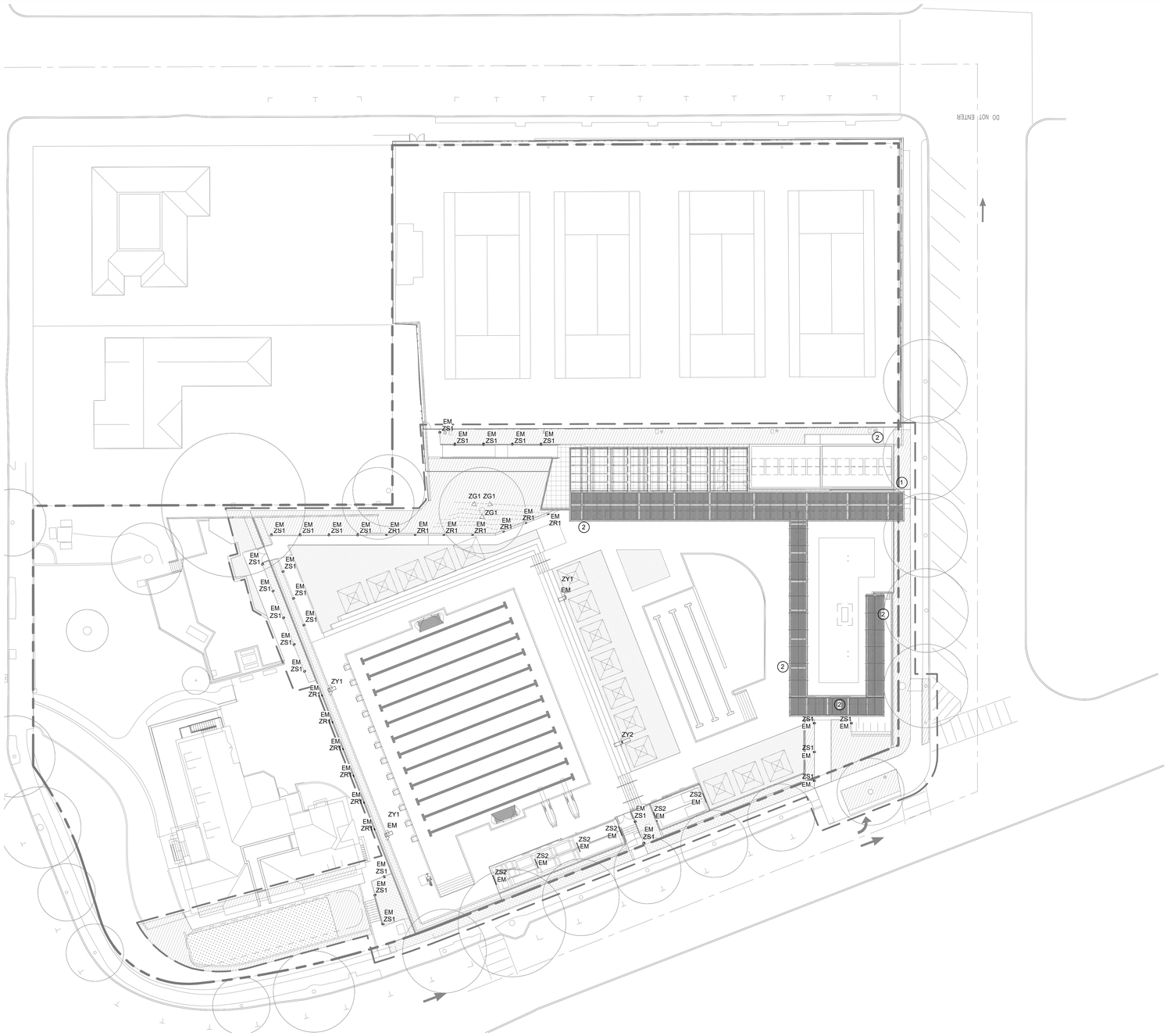

1 SITE PLAN - LIGHTING
1" = 20'-0"

KEYNOTES

1. POSSIBLE LIGHTING FOR SIGNAGE IN THIS LOCATION. TO BE COORDINATED LATER WITH ARCHITECT.
2. REFER TO SHEETS E301 AND E305 FOR ADDITIONAL BUILDING MOUNTED SITE LIGHTING.

GENERAL NOTES

1. PRIOR TO COMMENCING ANY UNDERGROUND EXCAVATIONS CONTACT "CALL BEFORE YOU DIG" DIAL 811

USA NORTH 811 Call 811 Before You Dig

els architecture+ urban design
2040 Addison St, Berkeley, CA 94704
510.549.2929 | elsarch.com

PROJECT:

PIEDMONT COMMUNITY POOL

777 MAGNOLIA AVENUE PIEDMONT, CA 94611

CLIENT:

CITY OF PIEDMONT

120 VISTA AVENUE PIEDMONT, CA 94611

PROJECT TEAM:

ARCHITECT:
ELS ARCHITECTURE AND URBAN DESIGN
2040 Addison Street
Berkeley, CA 94704
P: 510.549.2929

CIVIL ENGINEER:
BKF ENGINEERS
4670 Willow Road, Suite 250
Pleasanton, CA 94588
P: (925) 396-7704

LANDSCAPE ARCHITECT:
SWA
2200 Bridgeway
Sausalito, CA 94965
P: 415.332.5100

STRUCTURAL ENGINEER:
FORELL/ELSESSER ENGINEERS, INC.
160 Pine Street, 6th Floor
San Francisco, CA 94111
P: 415.837.0700

MEP / FIRE PROTECTION:
GUTTMANN & BLAEVOET
1620 Montgomery Street, Suite 230
San Francisco, CA 94111
P: 415.655.4000

AQUATICS:
AQUATICS DESIGN GROUP
2226 Faraday Avenue
Carlsbad, CA 92008
P: 760.438.8400

SPECIFICATIONS
TOPFLIGHT SPECS
49 Geary Street, Suite 230
San Francisco, CA 94108-5748
P: 415.546.6033

REVISION

NUMBER	DATE	DESCRIPTION

ISSUE:
100% DESIGN DEVELOPMENT

DATE:
APRIL 30, 2022

STAMP:

NOT FOR CONSTRUCTION

SHEET TITLE:
SITE PLAN - LIGHTING

SHEET NUMBER:
E102

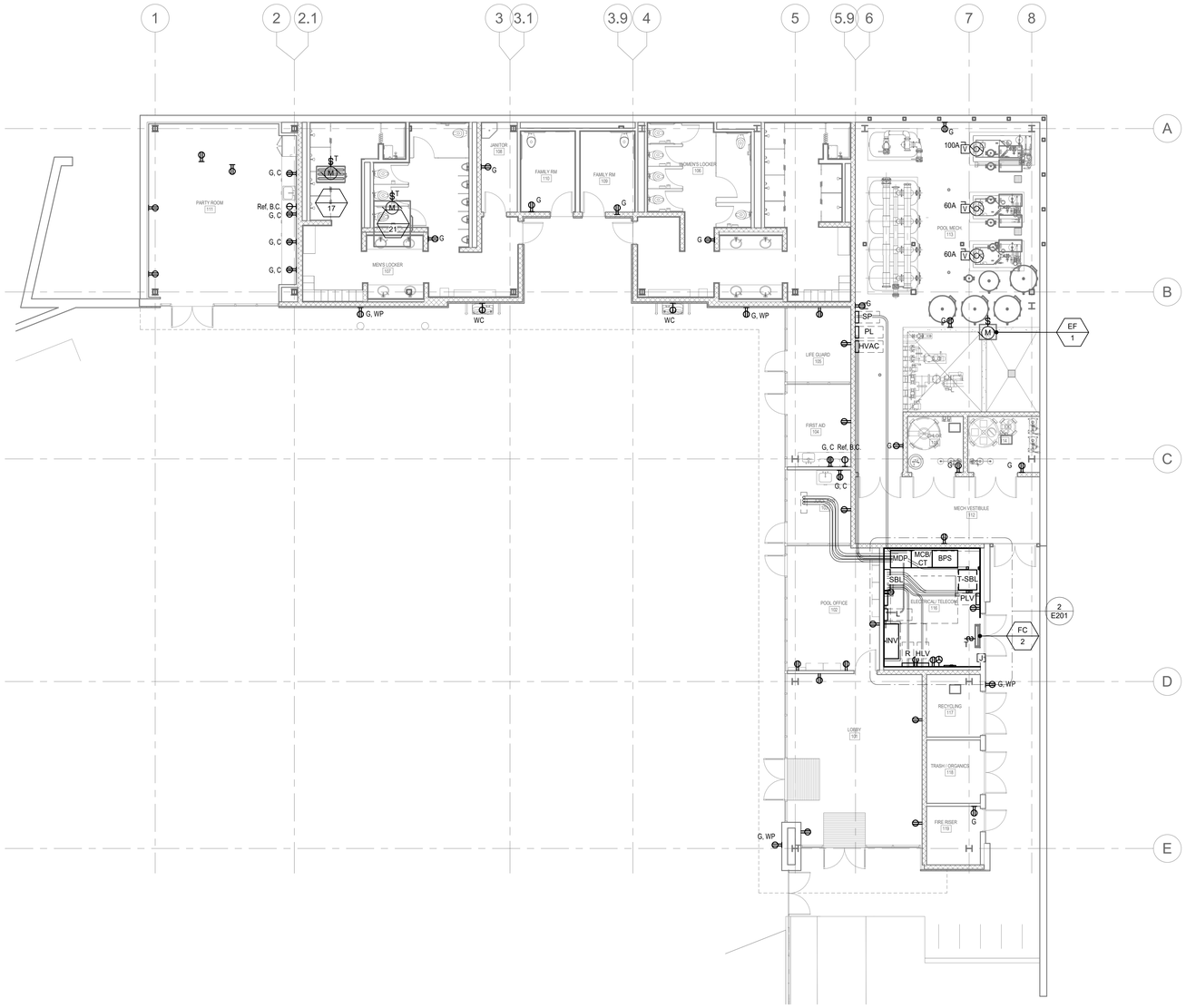

1 FLOOR PLAN - LEVEL 1 POWER
1/8" = 1'-0"

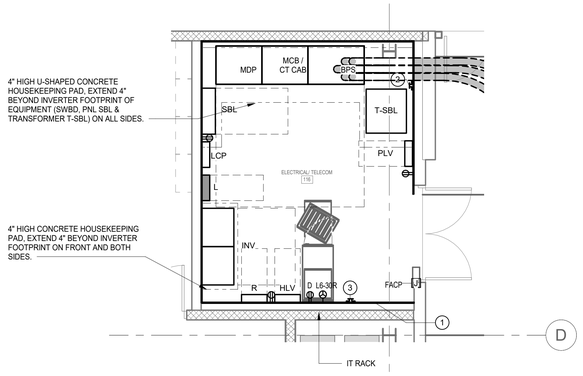

2 Electric Room Part Plan
1/4" = 1'-0"

KEYNOTES

1 8' HIGH x 3/4" PLYWOOD BOARD PAINTED WITH GRAY FIRE RETARDANT PAINT, PROVIDE ON ALL WALLS WITHIN ELECTRIC ROOM.
2 PRINCIPAL GROUND BAR, REFER TO SCHEMATIC GROUNDING DIAGRAM ON DRAWING E501
3 TELECOMMUNICATIONS GROUND BAR BY TELECOM CONTRACTOR, COORDINATE.

GENERAL NOTES

1. PROVIDE A SEPARATE NEUTRAL WIRE FOR EACH CIRCUIT.
2. PROVIDE A GROUND WIRE IN EACH CONDUIT.
3. UNLESS SPECIFICALLY NOTED OTHERWISE, ALL RECEPTACLES DEPICTED ON THIS PLAN SHALL BE WIRED TO PANEL 'R'.
4. ALL SINGLE-PHASE RECEPTACLES RATED 150 VOLTS TO GROUND OR LESS, 50 AMPERES OR LESS AND THREE-PHASE RECEPTACLES RATED 150 VOLTS TO GROUND OR LESS, 100 AMPERES OR LESS INSTALLED IN THE FOLLOWING LOCATIONS SHALL HAVE GROUND-FAULT CIRCUIT-INTERRUPTER (GFCI) PROTECTION FOR PERSONNEL:
   - BATHROOMS
   - KITCHENS
   - ROOFTOPS
   - OUTDOORS.
   - SINKS — WHERE RECEPTACLES ARE INSTALLED WITHIN 1.8 M (6 FT) FROM THE TOP INSIDE EDGE OF THE BOWL OF THE SINK
   - INDOOR WET LOCATIONS

   WHERE READILY ACCESSIBLE, GFCI TYPE RECEPTACLES MAY BE USED TO MEET THESE REQUIREMENTS, WHERE LOCATED BEHIND LARGE OR FIXED EQUIPMENT OR IN AREAS REQUIRING REMOVAL OF COVERS OR ACCESS PANELS GFCI TYPE CIRCUIT BREAKERS SHALL BE UTILIZED.
5. WIRING METHODS IN THE POOL MECH./STORAGE ROOM SHALL BE LISTED AND IDENTIFIED FOR USE IN SUCH AREAS PER NEC 680-14 (A) & (B).

els architecture+ urban design
2040 Addison St, Berkeley, CA 94704
510.549.2929 | elsarch.com

PROJECT:

PIEDMONT COMMUNITY POOL

777 MAGNOLIA AVENUE PIEDMONT, CA 94611

CLIENT:

CITY OF PIEDMONT

120 VISTA AVENUE PIEDMONT, CA 94611

PROJECT TEAM:

ARCHITECT:
ELS ARCHITECTURE AND URBAN DESIGN
2040 Addison Street
Berkeley, CA 94704
P: 510.549.2929

CIVIL ENGINEER:
BKF ENGINEERS
4670 Willow Road, Suite 250
Pleasanton, CA 94588
P: (925) 396-7704

LANDSCAPE ARCHITECT:
SWA
2200 Bridgeway
Sausalito, CA 94965
P: 415.332.5100

STRUCTURAL ENGINEER:
FORELL/ELSESSER ENGINEERS, INC.
160 Pine Street, 6th Floor
San Francisco, CA 94111
P: 415.837.0700

MEP / FIRE PROTECTION:
GUTTMANN & BLAEVOET
1620 Montgomery Street, Suite 230
San Francisco, CA 94111
P: 415.655.4000

AQUATICS:
AQUATICS DESIGN GROUP
2226 Faraday Avenue
Carlsbad, CA 92008
P: 760.438.8400

SPECIFICATIONS
TOPFLIGHT SPECS
49 Geary Street, Suite 230
San Francisco, CA 94108-5748
P: 415.546.6033

REVISION

NUMBER	DATE	DESCRIPTION

ISSUE:
100% DESIGN DEVELOPMENT

DATE:
APRIL 30, 2022

STAMP:

NOT FOR CONSTRUCTION

SHEET TITLE:
FLOOR PLAN - LEVEL 1

SHEET NUMBER:
E201

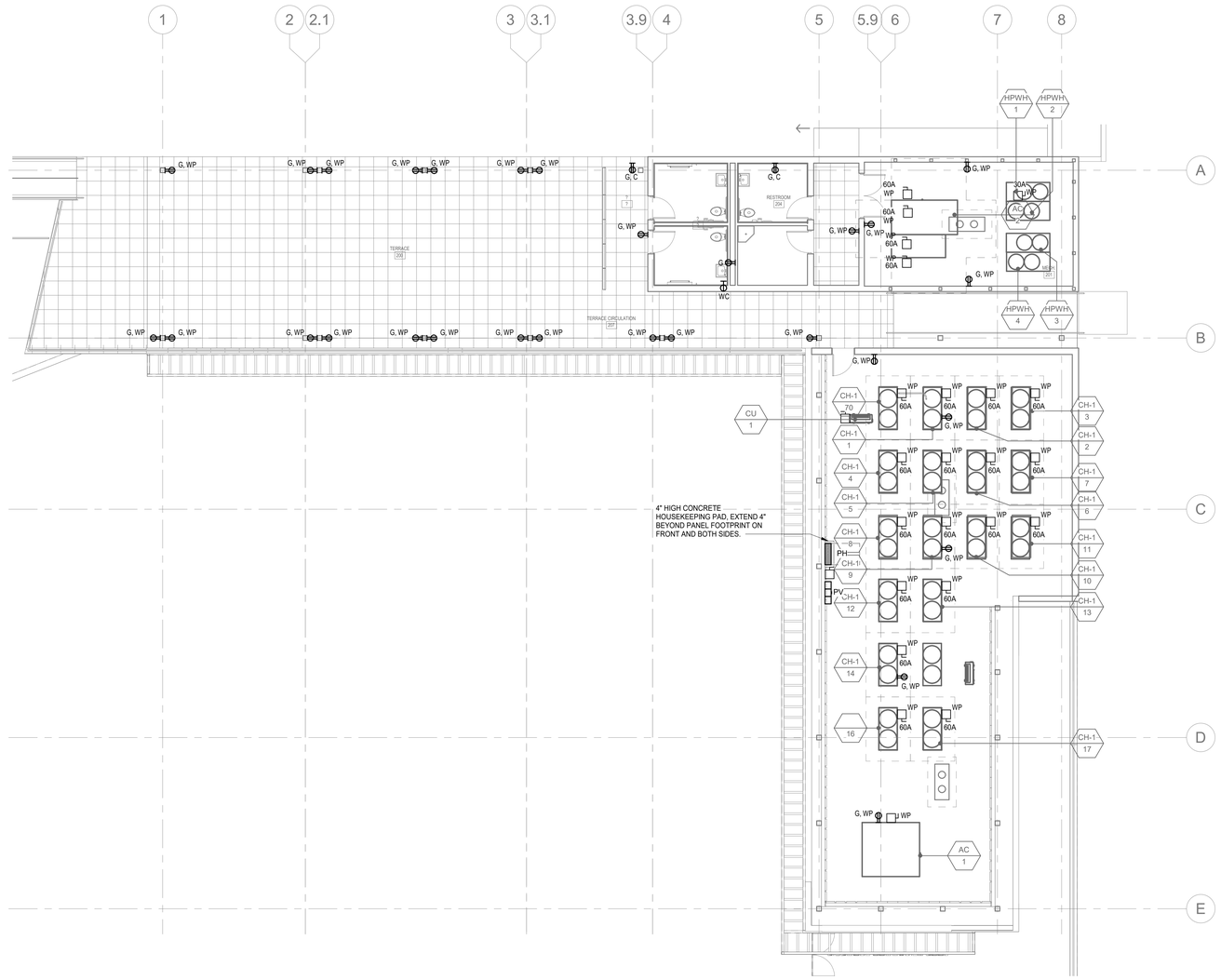

1 ROOF PLAN
1/8" = 1'-0"

PLAN NORTH

KEYNOTES

GENERAL NOTES

1. PROVIDE A SEPARATE NEUTRAL WIRE FOR EACH CIRCUIT.
2. PROVIDE A GROUND WIRE IN EACH CONDUIT.
3. UNLESS SPECIFICALLY NOTED OTHERWISE, ALL RECEPTACLES DEPICTED ON THIS PLAN SHALL BE WIRED TO PANEL 'R'.
4. ALL SINGLE-PHASE RECEPTACLES RATED 150 VOLTS TO GROUND OR LESS, 50 AMPERES OR LESS AND THREE-PHASE RECEPTACLES RATED 150 VOLTS TO GROUND OR LESS, 100 AMPERES OR LESS INSTALLED IN THE FOLLOWING LOCATIONS SHALL HAVE GROUND-FAULT CIRCUIT-INTERRUPTER (GFCI) PROTECTION FOR PERSONNEL:
   - BATHROOMS
   - KITCHENS
   - ROOFTOPS
   - OUTDOORS.
   - SINKS — WHERE RECEPTACLES ARE INSTALLED WITHIN 1.8 M (6 FT) FROM THE TOP INSIDE EDGE OF THE BOWL OF THE SINK
   - INDOOR WET LOCATIONS

   WHERE READILY ACCESSIBLE, GFCI TYPE RECEPTACLES MAY BE USED TO MEET THESE REQUIREMENTS, WHERE LOCATED BEHIND LARGE OR FIXED EQUIPMENT OR IN AREAS REQUIRING REMOVAL OF COVERS OR ACCESS PANELS GFCI TYPE CIRCUIT BREAKERS SHALL BE UTILIZED.
5. WIRING METHODS IN THE POOL MECH./STORAGE ROOM SHALL BE LISTED AND IDENTIFIED FOR USE IN SUCH AREAS PER NEC 680-14 (A) & (B).

els architecture+ urban design
2040 Addison St, Berkeley, CA 94704
510.549.2929 | elsarch.com

PROJECT:

PIEDMONT COMMUNITY POOL

777 MAGNOLIA AVENUE PIEDMONT, CA 94611

CLIENT:

CITY OF PIEDMONT

120 VISTA AVENUE PIEDMONT, CA 94611

PROJECT TEAM:

ARCHITECT:
ELS ARCHITECTURE AND URBAN DESIGN
2040 Addison Street
Berkeley, CA 94704
P: 510.549.2929

CIVIL ENGINEER:
BKF ENGINEERS
4670 Willow Road, Suite 250
Pleasanton, CA 94588
P: (925) 396-7704

LANDSCAPE ARCHITECT:
SWA
2200 Bridgeway
Sausalito, CA 94965
P: 415.332.5100

STRUCTURAL ENGINEER:
FORELL/ELSESSER ENGINEERS, INC.
160 Pine Street, 6th Floor
San Francisco, CA 94111
P: 415.837.0700

MEP / FIRE PROTECTION:
GUTTMANN & BLAEVOET
1620 Montgomery Street, Suite 230
San Francisco, CA 94111
P: 415.655.4000

AQUATICS:
AQUATICS DESIGN GROUP
2226 Faraday Avenue
Carlsbad, CA 92008
P: 760.438.8400

SPECIFICATIONS
TOPFLIGHT SPECS
49 Geary Street, Suite 230
San Francisco, CA 94108-5748
P: 415.546.6033

REVISION

NUMBER	DATE	DESCRIPTION

ISSUE:
100% DESIGN DEVELOPMENT

DATE:
APRIL 30, 2022

STAMP:

NOT FOR CONSTRUCTION

SHEET TITLE:

ROOF PLAN - POWER

SHEET NUMBER:

E205

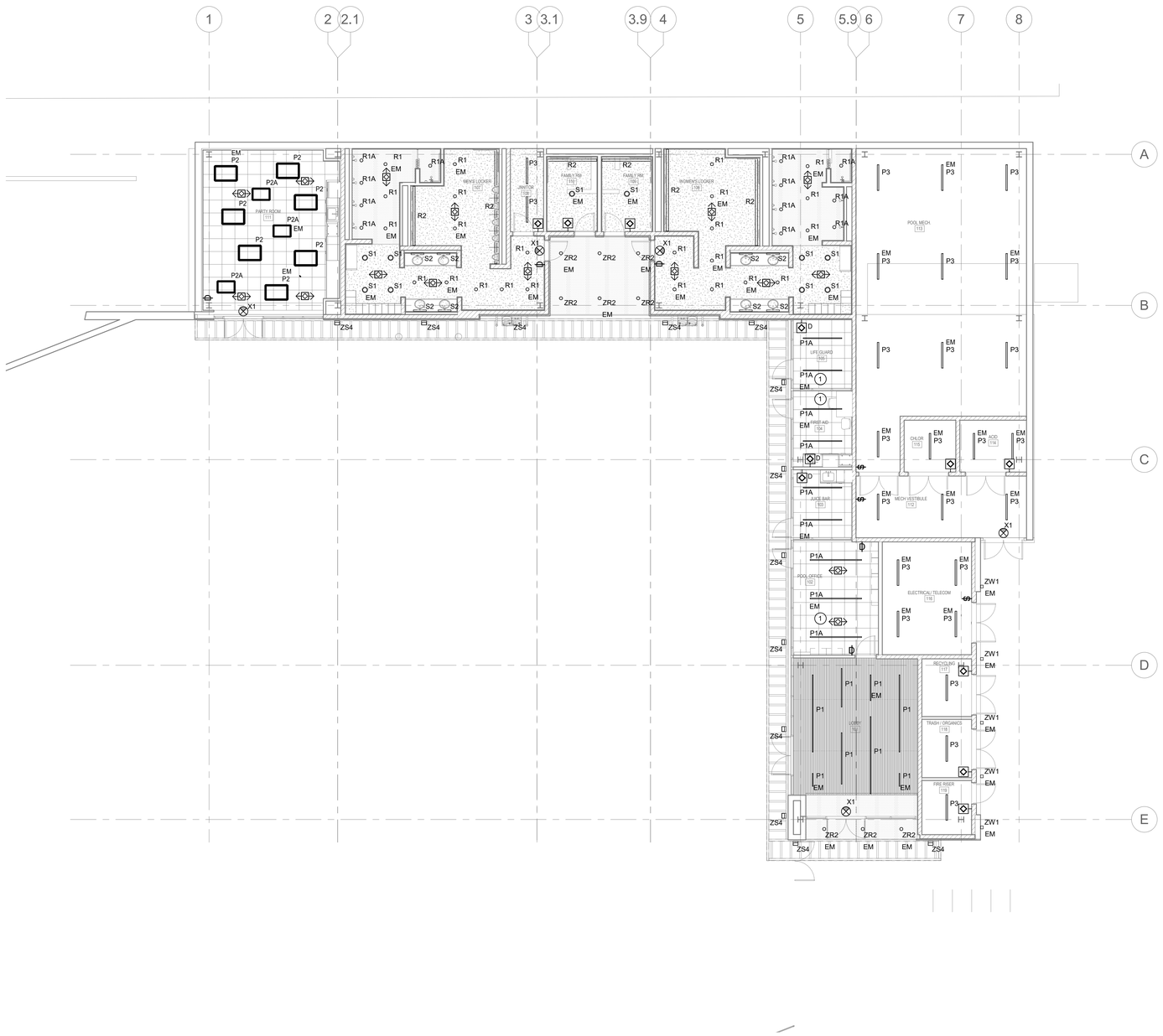

1 LEVEL 1
1/8" = 1'-0"

PLAN NORTH

KEYNOTES

1. PROVIDE TASK LIGHTS TO EACH WORKSTATION FOR LEED CREDITS.

GENERAL NOTES

1. UNLESS SPECIFICALLY NOTED OTHERWISE ALL NORMAL INTERIOR LIGHTING ON THIS DRAWING SHALL BE WIRED TO CIRCUIT L-1 (1P-20A) WITH 2#10, 1#10G IN 3/4" CONDUIT.
2. UNLESS SPECIFICALLY NOTED OTHERWISE ALL INTERIOR EMERGENCY LIGHTING ON THIS DRAWING SHALL BE WIRED TO EMERGENCY LIGHTING INVERTER CKT #1 (1P-20A) WITH 2#10, 1#10G IN 3/4" CONDUIT.
3. UNLESS SPECIFICALLY NOTED OTHERWISE ALL NORMAL EXTERIOR LIGHTING ON THIS DRAWING SHALL BE WIRED TO CIRCUIT L-2 (1P-20A) WITH 2#10, 1#10G IN 3/4" CONDUIT VIA LIGHTING CONTROL PANEL.
4. UNLESS SPECIFICALLY NOTED OTHERWISE ALL EXTERIOR EMERGENCY LIGHTING ON THIS DRAWING SHALL BE WIRED TO EMERGENCY LIGHTING INVERTER CKT #2 (1P-20A) WITH 2#10, 1#10G IN 3/4" CONDUIT VIA LIGHTING CONTROL PANEL.

els architecture+ urban design
2040 Addison St, Berkeley, CA 94704
510.549.2929 | elsarch.com

PROJECT:

PIEDMONT COMMUNITY POOL

777 MAGNOLIA AVENUE PIEDMONT, CA 94611

CLIENT:

CITY OF PIEDMONT

120 VISTA AVENUE PIEDMONT, CA 94611

PROJECT TEAM:

ARCHITECT:
ELS ARCHITECTURE AND URBAN DESIGN
2040 Addison Street
Berkeley, CA 94704
P: 510.549.2929

CIVIL ENGINEER:
BKF ENGINEERS
4670 Willow Road, Suite 250
Pleasanton, CA 94588
P: (925) 396-7704

LANDSCAPE ARCHITECT:
SWA
2200 Bridgeway
Sausalito, CA 94965
P: 415.332.5100

STRUCTURAL ENGINEER:
FORELL/ELSESSER ENGINEERS, INC.
160 Pine Street, 6th Floor
San Francisco, CA 94111
P: 415.837.0700

MEP / FIRE PROTECTION:
GUTTMANN & BLAEVOET
1620 Montgomery Street, Suite 230
San Francisco, CA 94111
P: 415.655.4000

AQUATICS:
AQUATICS DESIGN GROUP
2226 Faraday Avenue
Carlsbad, CA 92008
P: 760.438.8400

SPECIFICATIONS
TOPFLIGHT SPECS
49 Geary Street, Suite 230
San Francisco, CA 94108-5748
P: 415.546.6033

REVISION

NUMBER	DATE	DESCRIPTION

ISSUE:
100% DESIGN DEVELOPMENT

DATE:
APRIL 30, 2022

STAMP:

NOT FOR CONSTRUCTION

SHEET TITLE:

FLOOR PLAN LEVEL 1 - LIGHTING

SHEET NUMBER:

E301

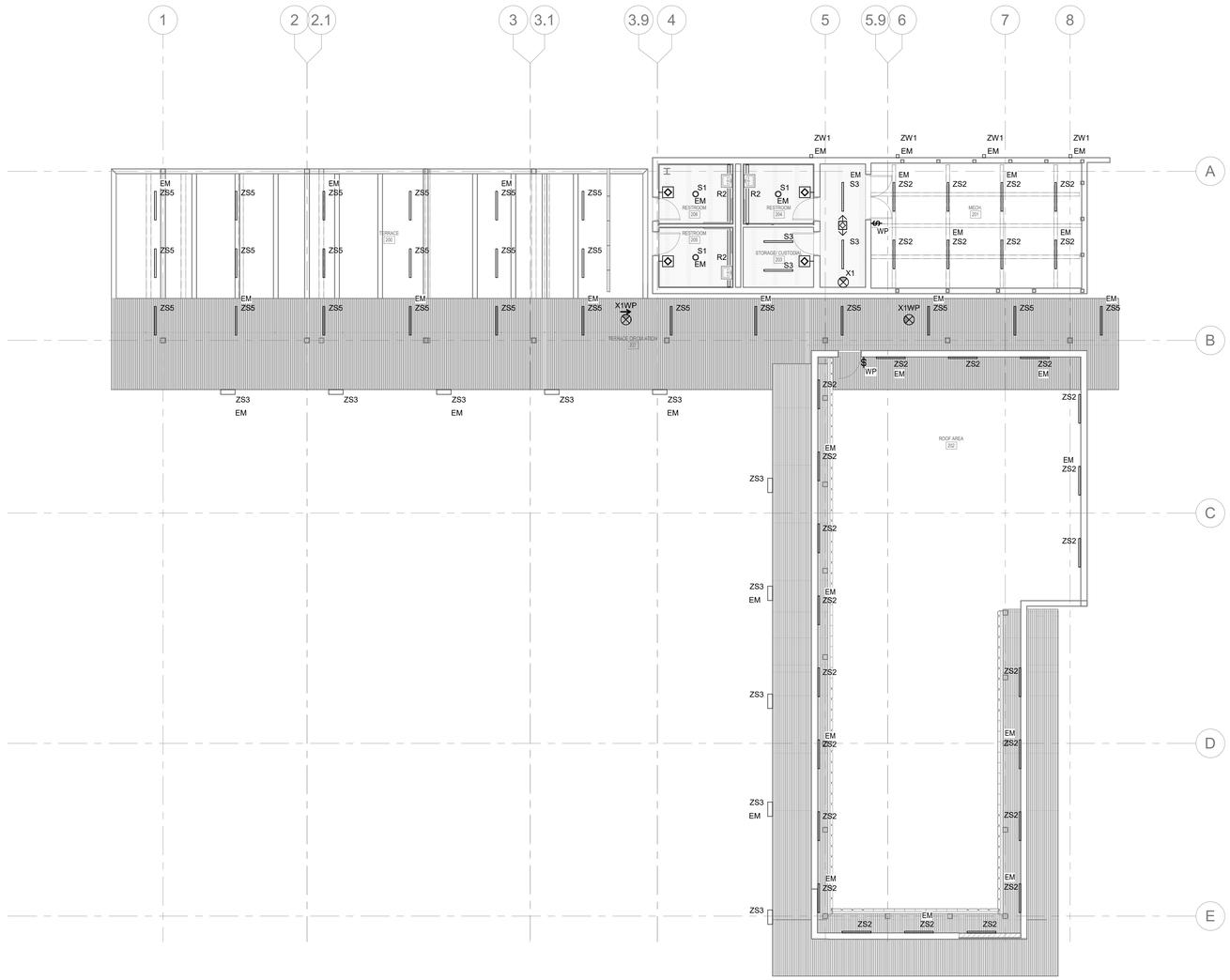

1 ROOF / TERRACE LEVEL - LIGHTING
1/8" = 1'-0"

KEYNOTES

GENERAL NOTES

1. UNLESS SPECIFICALLY NOTED OTHERWISE ALL NORMAL INTERIOR LIGHTING ON THIS DRAWING SHALL BE WIRED TO CIRCUIT L-1 (1P-20A) WITH 2#10, 1#10G IN 3/4" CONDUIT.
2. UNLESS SPECIFICALLY NOTED OTHERWISE ALL INTERIOR EMERGENCY LIGHTING ON THIS DRAWING SHALL BE WIRED TO EMERGENCY LIGHTING INVERTER CKT #1 (1P-20A) WITH 2#10, 1#10G IN 3/4" CONDUIT.
3. UNLESS SPECIFICALLY NOTED OTHERWISE ALL NORMAL EXTERIOR LIGHTING ON THIS DRAWING SHALL BE WIRED TO CIRCUIT L-2 (1P-20A) WITH 2#10, 1#10G IN 3/4" CONDUIT VIA LIGHTING CONTROL PANEL.
4. UNLESS SPECIFICALLY NOTED OTHERWISE ALL EXTERIOR EMERGENCY LIGHTING ON THIS DRAWING SHALL BE WIRED TO EMERGENCY LIGHTING INVERTER CKT #2 (1P-20A) WITH 2#10, 1#10G IN 3/4" CONDUIT VIA LIGHTING CONTROL PANEL.

els architecture+ urban design
2040 Addison St, Berkeley, CA 94704
510.549.2929 | elsarch.com

PROJECT:

PIEDMONT COMMUNITY POOL

777 MAGNOLIA AVENUE PIEDMONT, CA 94611

CLIENT:

CITY OF PIEDMONT

120 VISTA AVENUE PIEDMONT, CA 94611

PROJECT TEAM:

ARCHITECT:
ELS ARCHITECTURE AND URBAN DESIGN
2040 Addison Street
Berkeley, CA 94704
P: 510.549.2929

CIVIL ENGINEER:
BKF ENGINEERS
4670 Willow Road, Suite 250
Pleasanton, CA 94588
P: (925) 396-7704

LANDSCAPE ARCHITECT:
SWA
2200 Bridgeway
Sausalito, CA 94965
P: 415.332.5100

STRUCTURAL ENGINEER:
FORELL/ELSESSER ENGINEERS, INC.
160 Pine Street, 6th Floor
San Francisco, CA 94111
P: 415.837.0700

MEP / FIRE PROTECTION:
GUTTMANN & BLAEVOET
1620 Montgomery Street, Suite 230
San Francisco, CA 94111
P: 415.655.4000

AQUATICS:
AQUATICS DESIGN GROUP
2226 Faraday Avenue
Carlsbad, CA 92008
P: 760.438.8400

SPECIFICATIONS
TOPFLIGHT SPECS
49 Geary Street, Suite 230
San Francisco, CA 94108-5748
P: 415.546.6033

REVISION

NUMBER	DATE	DESCRIPTION

ISSUE:
100% DESIGN DEVELOPMENT

DATE:
APRIL 30, 2022

STAMP:

NOT FOR CONSTRUCTION

SHEET TITLE:
ROOF PLAN - LIGHTING

SHEET NUMBER:
E305

WIRING SCHEDULE - COPPER CONDUCTORS									
CIRCUIT	CONDUIT SIZE (INCHES)							CONDUCTOR SIZE	
RATING	NONE	G	N	NG	NGI	NNG	NNGI	PHASE(#) NEUTRAL	CND(#) IG
15	0.5	0.5	0.5	0.5	0.5	0.5	0.5	12	12
20	0.5	0.5	0.5	0.5	0.5	0.5	0.5	12	12
30	0.5	0.5	0.5	0.5	0.75	0.75	0.75	10	10
40	0.75	0.75	0.75	1	1	1	1	8	10
50	1	1	1	1.25	1.25	1.25	1.25	6	10
60	1	1.25	1.25	1.25	1.5	1.5	1.5	4	10
70	1	1.25	1.25	1.25	1.5	1.5	1.5	4	8
80	1.25	1.25	1.25	1.5	2	2	2	2	8
90	1.25	1.25	1.25	1.5	2	2	2	2	8
100	1.25	1.5	1.5	2	2	2	2.5	1	8
110	1.25	1.5	1.5	2	2	2	2.5	1	6
125	1.25	1.5	1.5	2	2	2	2.5	1	6
150	1.5	2	2	2	2.5	2.5	2.5	1/0	6
175	1.5	2	2	2	2.5	2.5	2.5	2/0	6
200	2	2	2	2.5	2.5	2.5	3	3/0	6
225	2	2.5	2.5	2.5	3	3	3	4/0	4
250	2.5	2.5	2.5	3	3	3	3.5	250	4
300	2.5	3	3	3.5	3.5	3.5	4	350	4
350	3	3.5	3.5	4	4	4	5	500	2
400	2@2	2@2	2@2	2@2.5	2@2.5	2@2.5	2@3	3/0	2
450	2@2	2@2.5	2@2.5	2@2.5	2@3	2@3	2@3	4/0	2
500	2@2.5	2@2.5	2@2.5	2@3	2@3	2@3	2@3.5	250	1
600	2@2.5	2@3	2@3	2@3.5	2@3.5	2@3.5	2@4	350	1
700	2@3	2@3.5	2@3.5	2@4	2@4	2@4	2@5	500	1/0
800	3@2.5	3@3	3@3	3@3	3@3.5	3@3.5	3@3.5	300	1/0
1000	3@3	3@3	3@3	3@3.5	3@4	3@4	3@4	400	2/0
1200	4@2.5	4@3	4@3	4@3.5	4@3.5	4@3.5	4@4	350	3/0
1600	5@3	5@3	5@3	5@3.5	5@4	5@4	5@4	400	4/0
2000	6@3.5	6@3.5	6@3.5	6@4	6@4	6@4	6@5	500	250
2500	7@3.5	7@3.5	7@3.5	7@4	7@4	7@4	7@4	500	350
3000	8@3.5	8@3.5	8@3.5	8@4	8@4	8@4	8@4	500	400

SUBSCRIPT KEY	
SUBSCRIPT	CONDUCTORS PER CONDUIT
NONE	3 PHASE CONDUCTORS, CONDUIT GROUND
G	3 PHASE CONDUCTORS, 1 GROUNDING CONDUCTOR
N	3 PHASE CONDUCTORS, 1 NEUTRAL CONDUCTOR, CONDUIT GROUND
NG	3 PHASE CONDUCTORS, 1 NEUTRAL CONDUCTOR, 1 GROUNDING CONDUCTOR
NGI	3 PHASE CONDUCTORS, 1 NEUTRAL CONDUCTOR, 1 GROUNDING CONDUCTOR, 1 ISOLATED GROUNDING CONDUCTOR
NNG	3 PHASE CONDUCTORS, 2 NEUTRAL CONDUCTORS*, 1 GROUNDING CONDUCTOR
NNGI	3 PHASE CONDUCTORS, 2 NEUTRAL CONDUCTORS*, 1 GROUNDING CONDUCTOR, 1 ISOLATED GROUNDING CONDUCTOR
1P	2 PHASE CONDUCTORS, 1 GROUNDING CONDUCTOR

* SINGLE NEUTRAL CONDUCTOR SIZES FOR CIRCUIT RATING 125 AND LESS

CIRCUIT RATING	15	20	30	40	50	60
SINGLE NEUTRAL CONDUCTOR SIZE	10	8	4	2	1	1/0
CIRCUIT RATING	70	80	90	100	125	
SINGLE NEUTRAL CONDUCTOR SIZE	2/0	3/0	4/0	250	250	

EXAMPLES

CIRCUIT RATING — 225 NG — SUBSCRIPT

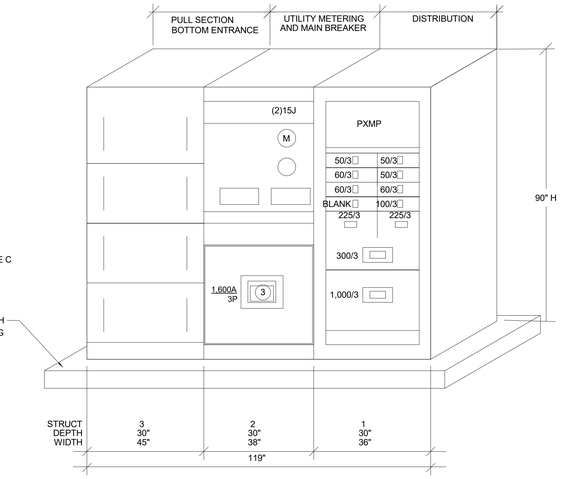

2 ELEVATION - MAIN SWBD MSB

SCALE: NONE

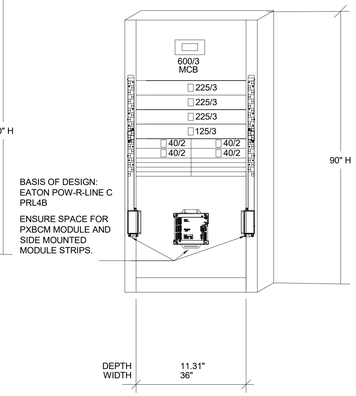

3 ELEVATION - DISTRIBUTION PANEL 'SBL'

SCALE: NONE

GENERAL NOTES

1. PRIOR TO FINAL ELECTRICAL APPROVAL, A SELECTIVE COORDINATION STUDY MUST BE PERFORMED BY A 3RD. PARTY TESTING AGENCY, AND REVIEWED, APPROVED AND SIGNED BY ENGINEER OF RECORD WITH LETTER STATING HE HAS REVIEWED AND AGREES WITH THE STUDY.
2. ALL EQUIPMENT RATED AT 1000 AMPERES OR GREATER SHALL BE TESTED IN CONFORMANCE WITH UL STANDARD 869 OR 891 FOR INSULATION BREAKDOWN PRIOR TO BEING ENERGIZED; THE TEST SHALL BE PERFORMED BY TESTING FACILITY ACCEPTABLE TO THE AUTHORITY HAVING JURISDICTION AND THE BUILDING OFFICIAL; CEC 230.95(C).
3. ALL ELECTRICAL EQUIPMENT MUST HAVE AN AIC RATING GREATER THAN OR EQUAL TO THE SHORT-CIRCUIT CURRENT AVAILABLE (S.C.A.) AT THE SECONDARY SIDE OF THE UTILITY COMPANY TRANSFORMER FOR THE PURPOSES OF BIDDING THE CONTRACTOR SHALL USED AN ASSUMED VALUE OF 100K AIC, VERIFY ACTUAL S.C.A. WITH THE FINAL PG&E S.C.A. LETTER.

SHEET NOTES

1. PROVIDE OVERSIZED BUS FOR PV/BATTERY STORAGE/FUTURE BI-DIRECTIONAL EV CHARGING CONNECTIONS PER CEC.
2. PAD-MOUNTED TRANSFORMER, WIRING TO MAIN SWBD 'MSB', AND UTILITY METER INSTALLATION BY PG&E.
3. PROVISIONS FOR FUTURE EATON PXMP MULTI-METERING.
4. PROVIDE SERVICE-RATED DISCONNECT TO DISCONNECT PV/BATTERY ENERGY SOURCE(S) FROM MAIN SWBD MSB. PROVIDE MARKINGS (e.g. SIGN OR LABELS) TO INDICATE THAT ALL CONTACTS OF THE DISCONNECT MIGHT BE ENERGIZED.
5. PROVIDE A PERMANENT LABEL, FOR THE DC PV POWER SOURCE, AT THE PV DISCONNECTING MEANS LABEL SHALL INDICATE.
   a. RATED MAXIMUM POWER-POINT CURRENT.
   b. RATED MAXIMUM POWER-POINT VOLTAGE.
   c. MAXIMUM SYSTEM VOLTAGE.
   d. MAXIMUM CIRCUIT CURRENT.
   e. MAXIMUM RATED OUTPUT CURRENT OF THE CHARGE CONTROLLER.
6. PROVIDE 7-5"C FROM EXISTING UTILITY POLE TO TRANSFORMER CONCRETE PAD. PROVIDE A 112" x 98" PRE-FABRICATED CONCRETE PAD WITH CUTOUTS FOR A PG&E INSTALLED TRANSFORMER. PROVIDE 4 -5"C FROM CONCRETE PAD TO MAIN SWITCHBOARD 'MSB'. PROVIDE 5"C CONDUITS WITH PULLSTRING WITH 3' PIGTAILS AT EACH END. PROVIDE TWO DRIVEN GROUND RODS AT CONCRETE PAD WITH 10' OF #2 GROUND WIRE INTERCONNECTING THE RODS. CONNECT GROUND WIRE TO ROD WITH GROUNDING CLAMPS. PG&E SHALL PROVIDE THE TRANSFORMER AND CONDUCTORS.
7. PROVIDE DAISY-CHAIN CONNECTION OF METERS TO DATA RACK TO ALLOW FOR REMOTE MONITORING AND ACCESS.
8. PROVIDE CT CONNECTIONS FROM GROUNDED SHORTING TERMINAL BLOCKS TO METER. A SINGLE LINE IS SHOWN FOR BREVITY. PROVIDE ALL REQUIRED CT CONNECTIONS TO METER.
9. PVS ARE PROVIDED UNDER DIVISION 22, DRAWINGS ARE DESIGN BUILD AND THE SYSTEM IS A DEFERRED SUBMITTAL. THE PV CONTRACTOR SHALL PRODUCE FINAL SHOP DRAWINGS AND PROVIDE FINAL INSTALLATION OF EQUIPMENT PROVIDE 2" C. FROM INVERTERS TO ROOF, STUB 6" ABOVE ROOF AND CAP. PROVIDE PULLSTRING WITH 3' PIGTAILS.
10. PROVIDE POWERFLEX #EVSE-DX DX CHARGING STATIONS, DUAL-MOUNTED, 32A-208V,-1PH EACH ON PEDESTAL WITH CONCRETE BASE. SEE MOUNTING DETAILS THIS SHEET. CHARGING STATIONS SHALL BE DESIGNED TO BE COMPATIBLE WITH EVCS LOAD MANAGEMENT CONTROLLER. POWERFLEX BASIS OF DESIGN MATCHES (E) EVCS LOCATED AT THE ADJACENT SITE FOR THE CITY OF MOUNTAIN VIEW COMMUNITY CENTER.
11. THE ELECTRICAL CONTRACTOR SHALL PROVIDE SHORT-CIRCUIT, COORDINATION, AND ARC-FAULT STUDIES FOR THE ELECTRICAL SYSTEM SHOWN IN ACCORDANCE WITH SPECIFICATION SECTIONS 260572, 260573, AND 260574. USE THE FAULT CURRENT VALUE SHOWN ON THE ONELINE UNLESS SUPERCEDED BY PG&E'S AIC LETTER. PG&E'S AIC LETTER WAS NOT AVAILABLE DURING THE DESIGN AND APPROVAL PHASE OF THE PROJECT. ALL EQUIPMENT MUST MEET THE AIC RATING REQUIREMENTS OF THE FINAL PG&E LETTER. PROVIDE STUDIES AS INDICATED AND PROVIDE ARC-FAULT LABELING OF ALL ELECTRICAL EQUIPMENT AS REQUIRED BY THE SPECIFICATIONS. COMPLETION OF THE STUDIES AND ARC-FAULT LABELING IS REQUIRE AS A CONDITION OF OCCUPANCY.

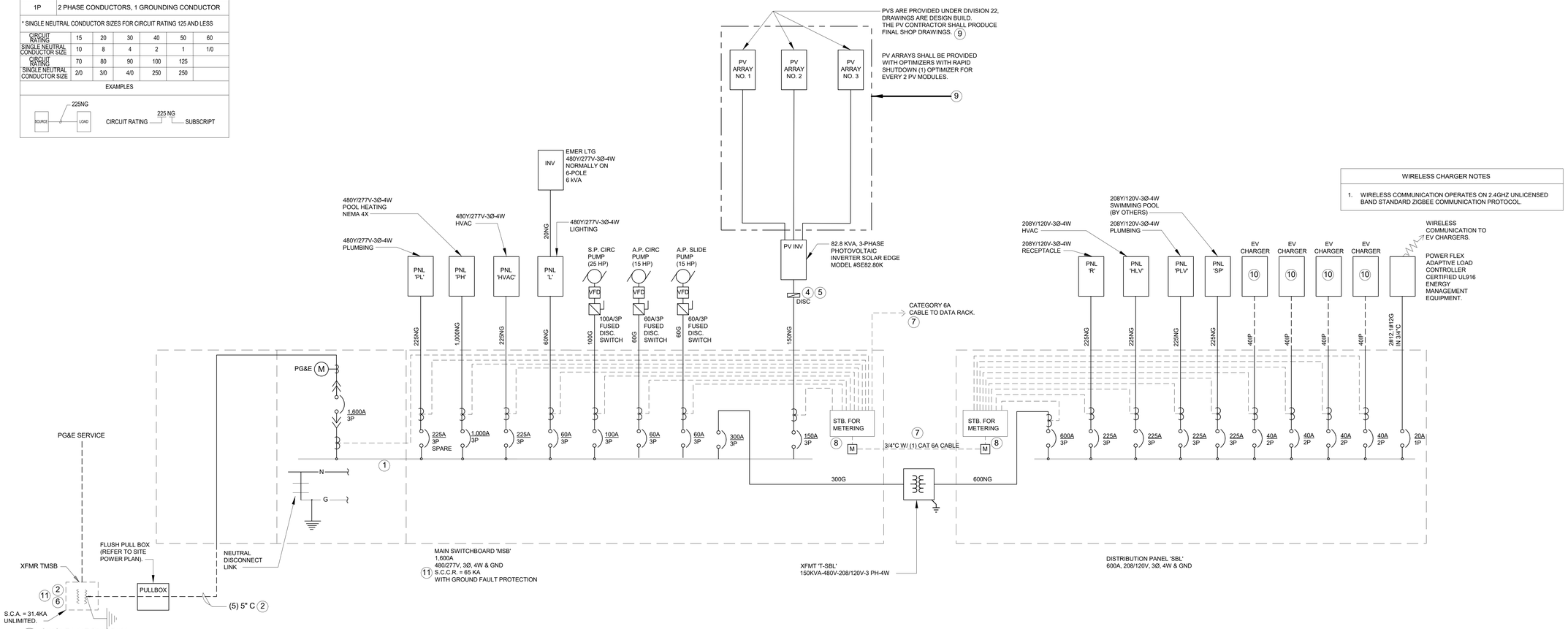

WIRELESS CHARGER NOTES
1. WIRELESS COMMUNICATION OPERATES ON 2.4GHZ UNLICENSED BAND STANDARD ZIGBEE COMMUNICATION PROTOCOL.

1 SINGLE LINE DIAGRAM
NOT TO SCALE

els architecture+ urban design
2040 Addison St, Berkeley, CA 94704
510.549.2929 | elsarch.com

PROJECT:

PIEDMONT COMMUNITY POOL

777 MAGNOLIA AVENUE PIEDMONT, CA 94611

CLIENT:

CITY OF PIEDMONT

120 VISTA AVENUE PIEDMONT, CA 94611

PROJECT TEAM:

ARCHITECT:
ELS ARCHITECTURE AND URBAN DESIGN
2040 Addison Street
Berkeley, CA 94704
P: 510.549.2929

CIVIL ENGINEER:
BKF ENGINEERS
4670 Willow Road, Suite 250
Pleasanton, CA 94588
P: (925) 396-7704

LANDSCAPE ARCHITECT:
SWA
2200 Bridgeway
Sausalito, CA 94965
P: 415.332.5100

STRUCTURAL ENGINEER:
FORELL/ELSESSER ENGINEERS, INC.
160 Pine Street, 6th Floor
San Francisco, CA 94111
P: 415.837.0700

MEP / FIRE PROTECTION:
GUTTMANN & BLAEVOET
1620 Montgomery Street, Suite 230
San Francisco, CA 94111
P: 415.655.4000

AQUATICS:
AQUATICS DESIGN GROUP
2226 Faraday Avenue
Carlsbad, CA 92008
P: 760.438.8400

SPECIFICATIONS
TOPFLIGHT SPECS
49 Geary Street, Suite 230
San Francisco, CA 94108-5748
P: 415.546.6033

REVISION

NUMBER	DATE	DESCRIPTION

ISSUE:
100% DESIGN DEVELOPMENT

DATE:
APRIL 30, 2022

STAMP:

NOT FOR CONSTRUCTION

SHEET TITLE:
SINGLE LINE DIAGRAM

SHEET NUMBER:
E501

EXTERIOR LIGHTING FIXTURE SCHEDULE

TYPE	IMAGE	DESCRIPTION	MOUNTING	MANUFACTURER/ CATALOG # (SEE NOTES 6)	LAMP	DRIVER	VOLTS	INPUT WATTS	FINISH	LOCATION
ZG1		TREE LED UPLIGHT WITH MEDIUM FLOOD OPTIC, RECTILINEAR LENS AND 360º ROTATIONAL CAPABILITY.	GROUND (STAKE MOUNTED)	BK LIGHTING NS-LED-XX-MFL-13-11-360SL	LED 3000K CCT/80 CRI XX LM	INTEGRAL DIMMABLE	UNV	7 W	TBD	EXISTING OAK TREE
ZR1		RECESSED STEP LIGHT	RECESSED (WALL) MOUNTING HT. 2' 0" ABOVE PATHWAY	BEGA 24 212-K3-FINISH	LED 3000K CCT/80 CRI 1,467 LM	INTEGRAL DIMMABLE	UNV	15 W	TBD	EXTERIOR WALL
ZR2		EXTERIOR CANOPY MOUNTED DOWNLIGHT	RECESSED (CANOPY)	BEGA 24 823-K3-FINISH	LED 3000K CCT/80 CRI 1,181 LM	INTEGRAL DIMMABLE	UNV	9.7 W	TBD	EXTERIOR CANOPY
ZS1		37.4" TALL BOLLARD LIGHT	SURFACE (GROUND)	HESS LN950-HP/LED-WW-UNV-A-FINISH-DIM	LED 3000K CCT/80 CRI 1,061 LM	INTEGRAL DIMMABLE	UNV	33 W	TBD	SITE
ZS2		4'-0" LONG SURFACE MOUNTED VAPORTIGHT LIGHT	SURFACE (FENCE) MOUNTING HT. 6' 5" ABOVE FLOOR	DAY BRITE D-W-P-E-35L-830-4-UNV	LED 3000K CCT/80 CRI 3,500 LM	INTEGRAL DIMMABLE	UNV	32 W	STANDARD	UTILITY FENCE
ZS3		SURFACE MOUNTED ADJUSTABLE FLOODLIGHT TILTED 30 DEGRESS UPWARDS	SURFACE (EAVES)	ELLIPTIPARZX S172-M336-S-FINISH-M-V0-830-	LED 3000K CCT/80 CRI 18,332 LM	INTEGRAL DIMMABLE	UNV	163 W	TBD	EAVES, LEVEL 2
ZS4		TRELLIS MOUNTED LIGHT WITH WALL WASH OPTIC	SURFACE (TRELLIS)	BEGA 22 383-K3-FINISH	LED 3000K CCT/80 CRI 2,187 LM	INTEGRAL DIMMABLE	UNV	21 W	TBD	TRELLIS, LEVEL 1
ZS5		4'-0" LONG SURFACE MOUNTED LIGHT	SURFACE (EAVES)	SENSO 367-90-4-30-25-FINISH-08-STD/LCS -VOLTAGE-01	LED 3000K CCT/80 CRI 843 LM/FT	INTEGRAL DIMMABLE	UNV	9.4 W/FT	TBD	EAVES, LEVEL 2
ZW1		WALL SCONCE WITH TYPE 3 OPTIC	SURFACE (WALL) MOUNTING HT. 8' 0" ABOVE PATHWAY	HE WILLIAMS VWMV-L17-830-T3-FINISH-SDGL	LED 3000K CCT/80 CRI 1,700 LM	INTEGRAL DIMMABLE	UNV	25 W	TBD	EXTERIOR WALL
ZY1		30'-0" TALL POLE WITH FLOODLIGHT HAVING NEMA 7X5 OPTIC AND 12.5 DEGREE TILT UPWARDS AND HOUSE SIDE SHIELD	POLE MOUNTED (30' HIGH POLE) MOUNTING HT. 30' 0"	GARDCO PUREFORM PFF-276L-1A-WW-G2-SF-AIRP-VOLTAGE-FP1-OPTIONS-FINISH; HIS-PFF-276	LED 3500K CCT/70 CRI 117,911 LM	INTEGRAL DIMMABLE	UNV	909 W	TBD	NEW SWIMMING POOL
ZY2		SAME AS ZY1 BUT WITH AN ADDITIONAL HEAD AT 180 DEGREES FROM THE FIRST ONE. ADDITIONAL HEAD TO HAVE 25 DEGREE TILT UPWARDS AND HOUSE SIDE SHIELD	POLE MOUNTED (30' HIGH POLE) MOUNTING HT. 30' 0"	GARDCO PUREFORM HEAD 1: PFF-276L-1A-WW-G2-SF-AIRP-VOLTAGE-FP1-OPTIONS-FINISH; HIS-PFF-276 HEAD 2: PFF-138L-700-WW-G2-SF-AIRP-VOLTAGE-FP1-OPTIONS-FINISH;...	LED 3500K CCT/70 CRI HEAD 1:117,911 LM HEAD 2:42,284 LM	INTEGRAL DIMMABLE	UNV	HEAD 1: 909 W HEAD 2: 289 W	TBD	NEW SWIMMING POOL, ACTIVITY POOL

FIXTURE SCHEDULE NOTES:

REFER TO SPEC SECTION 26 50 00 LUMINAIRES AND ACCESSORIES FOR COMPLETE FIXTURE CUTSHEETS.

1. REFER TO ARCHITECTURAL DRAWINGS FOR EXACT LOCATION, MOUNTING HEIGHT AND MOUNTING REQUIREMENTS OF ALL LUMINAIRES.
2. ALL EXTERIOR LIGHTING FIXTURES SHALL BE 3000K COLOR TEMPERATURE AND MIN. 80 CRI, TYP. UNLESS OTHERWISE NOTED.
3. PROVIDE COMPLETE MOUNTING ACCESSORIES, SUPPORT BRACKETS, CLIPS, ETC. AS APPLICABLE TO THE FINISH CEILING OR CEILING STRUCTURE AS REQUIRED.
4. ALL EXTERIOR MOUNTED LIGHT FIXTURES SHALL BE UL WET LISTED EXCEPT FOR COVERED DOWNLIGHTS WHICH SHALL BE UL DAMP LISTED.
5. ARCHITECT TO CONFIRM ALL FINISHES.

INTERIOR LIGHTING FIXTURE SCHEDULE

TYPE	IMAGE	DESCRIPTION	MOUNTING	MANUFACTURER/ CATALOG # (SEE NOTES 6)	LAMP	DRIVER	VOLTS	INPUT WATTS	FINISH	LOCATION
P1		PENDANT MOUNTED LINEAR DIRECT LIGHT.	PENDANT (CEILING MOUNT) BOTTOM OF FIXTURE FLUSH WITH BOTTOM OF WOODEN SLAT	FINELITE HP-X-P-D-LENGTH PER PLAN-B-935-F-VOLTAGE-SC-FC-10%-CEILING HARDWARE-FE-FINISH-OPTIONS	LED 3500K CCT/90 CRI 516 LM/FT	INTEGRAL DIMMABLE TO 10%	UNV	4.2 W/FT	BY ARCHITECT	LOBBY
P1A		SAME AS TYPE P1 EXCEPT WITH DIRECT/INDIRECT LIGHT	PENDANT (CEILING MOUNT) MOUNTING HT. VARIES BETWEEN 8'-0" AFF	FINELITE HP-X-P-ID-LENGTH PER PLAN-B-B-935-WSO-F-VOLTAGE-SC-FC-10%-CEILING HARDWARE-FE-FINISH-OPTIONS	LED 3500K CCT/90 CRI 1,059 LM/FT	INTEGRAL DIMMABLE TO 10%	UNV	8.6 W/FT	BY ARCHITECT	OFFICES
P2		CUBE SHAPED PENDANT MOUNTED DIRECT LIGHT WITH WARM DIM CAPABILITY, FLOOD OPTIC AND ACOUSTIC PROPERTIES.	PENDANT (CEILING) MOUNTING HT. VARIES BETWEEN 8'-0" AND 8'-6" AFF. REFER TO RCP.	LIGHTART ACC-SHPE-CUBE-34SQ-OUTER FELT COLOR-INNER FELT COLOR-STD-CANOPY COLOR-POWER CORD COLOR-FRAME...	LED 3000K-1800K CCT/90 CRI 1,650 LM	INTEGRAL DIMMABLE TO 1%	UNV	14.6 W	BY ARCHITECT	PARTY ROOM
P2A		SAME AS TYPE P2 EXCEPT OF SMALLER SIZE.	PENDANT (CEILING) MOUNTING HT. VARIES BETWEEN 8'-0" AND 8'-6" AFF. REFER TO RCP.	LIGHTART ACC-SHPE-CUBE-27SQ-OUTER FELT COLOR-INNER FELT COLOR-STD-CANOPY COLOR-POWER CORD COLOR-FRAME...	LED 3000K-1800K CCT/90 CRI 1,650 LM	INTEGRAL DIMMABLE TO 1%	UNV	14.6 W	BY ARCHITECT	PARTY ROOM
P3		PENDANT MOUNTED LINEAR STRIP FIXTURE.	PENDANT (CEILING MOUNT) BOTTOM OF FIXTURE AT +12'-0" AFF.	WILLIAMS LIGHTING 75R-4-L50-8-35-VBY-2-MOUNTING-LENGTH-DIM-UNV	LED 3500K CCT/80 CRI 5000 LM	INTEGRAL DIMMABLE	UNV	31.2 W	STANDARD	BACK OF HOUSE
R1		3.5" APERTURE DOWNLIGHT	RECESSED (T-GRID OR GYP. BD. CEILING)	FOCAL POINT FLC3D-RO-SW-900L-VOLTAGE-LD1-IC-LC3-RO-SW-900L-935K-90-DNT-FL1-WH-WP	LED 3500K CCT/90 CRI 845 LM	INTEGRAL DIMMABLE TO 10%	UNV	10 W	STD. WHITE	RESTROOM
R1A		SAME AS TYPE R1 EXCEPT WITH OUTDOOR RATING	RECESSED (T-GRID OR GYP. BD. CEILING)	FOCAL POINT FLC3D-RO-SW-900L-VOLTAGE-LD1-IC-OD-LC3-RO-SW-900L-935K-90-DNT-FL1-WH-WP	LED 3500K CCT/90 CRI 845 LM	INTEGRAL DIMMABLE TO 10%	UNV	10 W	STD. WHITE	SHOWERS
R2		RECESSED LINEAR LIGHT WITH REGRESSED LENS	RECESSED (GYP. BD. CEILING)	FINELITE HP-4-R-RG-D-LENGTH PER PLAN-B-935-RG-WCB-96LG-VOLTAGE-SC-FC-10%-CEILING HARDWARE-FE-SW-OPTIONS	LED 3500K CCT/90 CRI 447 LM/FT	INTEGRAL DIMMABLE	UNV	4.6 W/FT	STD. WHITE	RESTROOM
S1		4'-0" LONG SURFACE MOUNTED LIGHT	SURFACE (EAVES)	LIGHTOLIER S10R-9-35K-22-W-Z10U	LED 3500K CCT/90 CRI 2200 LM	INTEGRAL DIMMABLE	UNV	24 W	WHITE	LOCKER
S2		LINEAR VANITY FIXTURE	SURFACE (WALL) BOTTOM OF FIXTURE AT +7'-0" AFF	MOLTO LUCE RIDE-BLND-11-35-WHITE MATTE FINISH	LED 3500K CCT/90 CRI 400 LM/FT	INTEGRAL DIMMABLE	UNV	6.5 W/FT	MATTE WHITE	RESTROOM - VANITY
S3		SAME AS TYPE P3 EXCEPT WITH SURFACE MOUNTING	SURFACE (CEILING)	WILLIAMS LIGHTING 75R-4-L50-8-35-OPTIONS-MOUNTING-LENGTH-DIM-VOLTAGE	LED 3500K CCT/80 CRI 5000 LM	INTEGRAL DIMMABLE	UNV	31.2 W	STANDARD	BACK OF HOUSE
X1		SINGLE FACE OR DOUBLE FACE EDGE LIT EXIT SIGN WITH GREEN LETTERS ON WHITE BACKGROUND. AC ONLY. PROVIDE ARROWS AS SHOWN ON PLANS.	CEILING OR WALL OR PENDANT	EMERGI LITE PRESTIGE W-LX-FACES-N-G-W-ARROES-TRIM-MOUNTING-OPTIONS	LED PROVIDED WITH THE FIXTURE	INTEGRAL	120/277	4 W	GREEN LETTERS ON WHITE	THROUGHOUT
X1WP		EXTERIOR SINGLE FACE WEATHERPROOF TYPE EXIT SIGN WITH GREEN LETTERS. AC ONLY.	SURFACE (WALL MOUNTED)	WILLIAMS LIGHTING EXIT/WET/CP-SF-G-WHT-AC-TP	LED PROVIDED WITH THE FIXTURE	INTEGRAL	120/277	3 W	GREEN LETTERS ON WHITE	EXTERIOR

FIXTURE SCHEDULE NOTES:

REFER TO SPEC SECTION 26 50 00 LUMINAIRES AND ACCESSORIES FOR COMPLETE FIXTURE CUTSHEETS.

1. REFER TO ARCHITECTURAL DRAWINGS FOR EXACT LOCATION, MOUNTING HEIGHT AND MOUNTING REQUIREMENTS OF ALL LUMINAIRES.
2. ALL INTERIOR LIGHTING FIXTURES SHALL BE 3500K COLOR TEMPERATURE AND MIN. 90 CRI, TYP. UNLESS OTHERWISE NOTED.
3. PROVIDE COMPLETE MOUNTING ACCESSORIES, SUPPORT BRACKETS, CLIPS, ETC. AS APPLICABLE TO THE FINISH CEILING OR CEILING STRUCTURE AS REQUIRED.
4. ARCHITECT TO CONFIRM ALL FINISHES.

LIGHTING CONTROL SEQUENCE OF OPERATION

ROOM TYPE	OCC SENSOR 6					PHOTOCELL			DIMMING			TIME CLOCK			SWITCHES				SYSTEM						REMARKS
	AUTO ON3	MANUAL ON3	AUTO OFF	PARTIAL OFF AT NORMAL HOURS	AUTO OFF AFTER HOURS (MAX 20MIN)	AUTO OFF @ TARGET FC	AUTO DIM @ TARGET FC	SET LEVEL TO 50 FC	CONTINUOUS1	STEP1	MULTI ZONE2	TIME ON4	TIME OFF4	ASTRONOMICAL TIME CLOCK	WALL SWITCH	DIMMER SWITCH	SSCENE CONTROL	PLUG LOAD	NETWORK	STAND-ALONE	CURRENT MONITORING6	AUXILIARY RELAY	REMOTE SIGNAL CONTROL	DEMAND RESPONSE	
Commercial Bldg (> 10,000 sq ft)												6 AM	10 PM					●	●		●				Building SF is less than 10,000 SF. Demand Response is not required.
Areas w/ 1-2 lamp single luminaire (< 100 sq ft)	100%		20 min												●					●					Spaces with more than 100 sq ft will need either continuous dimming or 4 levels of step dimming, depending on lighting type.
Small Office (≤ 250 sq ft)	100%		20 min				●		●	●						●		●	●						Plug Load Required. Sensor required space. Partial On or Vacancy if space requires multilevel. Daylighting control if part of LEED credits.
Utility, Electrical Room, and Mechanical rooms															●										ON/OFF switch only, no dimmers or sensors.
Janitor Closet	100%		20 min												●										
Toilets	100%		20 min													●									
Restrooms and Lockers (≥ 100 sq ft)	100%		20 min						●	●						●			●						Restrooms are exempt from multi-level, but require bilevel 30-70%
Corridor	100%			50% 20 min	20 min				●	●						●			●						Full or Partial Off, and Off After Hour for commercial spaces. Shall be automatically activated from all design paths of egress.
Lobby	100%		20 min				●		●	●						●		●	●						Plug load required at reception area. Daylighting controls for daylit zones only.
Storage Room (< 100 sq ft)	100%		20 min												●					●					
Party room	100%		20 min				●		●	●						●			●						Daylighting controls for daylit zones only.
Recycling, Trash, Fire Riser	100%		20 min												●					●					
Terrace	100%		20 min			●			●					●		●			●						
Exterior / Wall	100%			50% 20 min		●			●					●											Outdoor luminaires with bottoms ≤ 24' above ground need occupancy sensors. No more than 1,500W lighting controlled together. Exception : with max. rated wattage of 75 watts.
Exterior / Non wall or pole mounted						●			●					●											
Exterior / Pole Lights	100%			50% 20 min		●			●					●											Outdoor pole mounted luminaires with bottoms ≤ 24' above ground need occupancy sensors. No more than 1,500W lighting controlled together. Exception : with max. rated wattage of 75 watts.

FOOTNOTES:

1 Continuous dimming and step dimming are chosen based on light source type per Title 24 130.1A. If continuous dimming is not necessary per lighting source, then LMSW-103 will be provided with 50% for step dimming.
2 Multizone is shown chosen due to typical rooms. For example, if there is a primary daylight zone and a non-daylighting zone, then these zones must be separated. Therefore, an open office will need separated zones.
3 There are no Title 24 requirements for manual on and auto on. There are only requirements for partial off NH and auto off AH.
4 Daylighting is not necessary when areas do not include skylights or glazing < 24 sq ft or skylit+primary sidelit zone is less than 120W. Luminaires in or at least 50% within daylighting zones must be controlled.
5 Timeclock settings can be changed to have different time on/off settings. Typical schedules were added in chart above.
6 Scene control is not necessary per Title 24 as long as dimming provided is per lighting source standards. Scene control can be checked off by end user if needed.
6 Controlled plug load must be within 6 ft of uncontrolled receptacle where controlled plug loads are needed.

NOTES FOR EXTERIOR:

a. Exceptions: Signs, façade lighting, statutes, bridges, health or life safety lighting.
b. Luminaires that illuminate public right of way roads, sidewalks, and bikeways.
c. Exterior Wall: Outdoor luminaires with bottoms less than or equal to 24' above the ground need motion or other controls.
d. Outdoor lighting needs to be controlled by astronomical time clock and automatically shut off by photocell.

GENERAL NOTES:

I. Occupancy Sensor required spaces (Individual Offices <250sqft, Multipurpose <1000sqft, Classrooms, & Conference Rooms) that meet multilevel requirement (>100sqft and General Lighting over .5W/sqft) must be Vancancy or Partial On
II. Hospitals and Correctional Facility Institutions are exempt from Title 24. This includes Hospitality Lobbies and Waiting rooms used for 365 24 hour operations.
III. Daylighting is not necessary when areas do not include skylights or glazing < 24 sq ft or skylit+primary sidelit zone is less than 120W. Luminaires in or at least 50% within daylighting zones must be controlled.
IV. Auto dim and photocell are only applicable when not just on a time clock and has dimming capabilities.
V. Controlled plug load must be within 6 ft of uncontrolled receptacle where controlled plug loads are needed.
VI. Separate shut off control for each 5,000 sq ft
VII. Exit luminaire is not under general lighting and must be kept on 24 hours 365 days.
VIII. TARGET FC for daylighting is 150% design illuminance and lighting is to be reduced at least 65% power in nonresidential interior. TARGET FC for daylighting in a parking garage is 150% design illuminance and lights are to be turned off.
IX. Area control exceptions: malls, auditorium, industrial facilities, commercial centers. The person needs to be able to see the area that is being controlled. For example, a security guard should be able to see the control switch for the areas through a security camera when switching lights.

els architecture+ urban design
2040 Addison St, Berkeley, CA 94704
510.549.2929 | elsarch.com

PROJECT:

PIEDMONT COMMUNITY POOL

777 MAGNOLIA AVENUE PIEDMONT, CA 94611

CLIENT:

CITY OF PIEDMONT

120 VISTA AVENUE PIEDMONT, CA 94611

PROJECT TEAM:

ARCHITECT:
ELS ARCHITECTURE AND URBAN DESIGN
2040 Addison Street
Berkeley, CA 94704
P: 510.549.2929

CIVIL ENGINEER:
BKF ENGINEERS
4670 Willow Road, Suite 250
Pleasanton, CA 94588
P: (925) 396-7704

LANDSCAPE ARCHITECT:
SWA
2200 Bridgeway
Sausalito, CA 94965
P: 415.332.5100

STRUCTURAL ENGINEER:
FORELL/ELSESSER ENGINEERS, INC.
160 Pine Street, 6th Floor
San Francisco, CA 94111
P: 415.837.0700

MEP / FIRE PROTECTION:
GUTTMANN & BLAEVOET
1620 Montgomery Street, Suite 230
San Francisco, CA 94111
P: 415.655.4000

AQUATICS:
AQUATICS DESIGN GROUP
2226 Faraday Avenue
Carlsbad, CA 92008
P: 760.438.8400

SPECIFICATIONS
TOPFLIGHT SPECS
49 Geary Street, Suite 230
San Francisco, CA 94108-5748
P: 415.546.6033

REVISION

NUMBER	DATE	DESCRIPTION

ISSUE:
100% DESIGN DEVELOPMENT

DATE:
APRIL 30, 2022

STAMP:

NOT FOR CONSTRUCTION

SHEET TITLE:
LIGHTING FIXTURE SCHEDULE

SHEET NUMBER:
E601

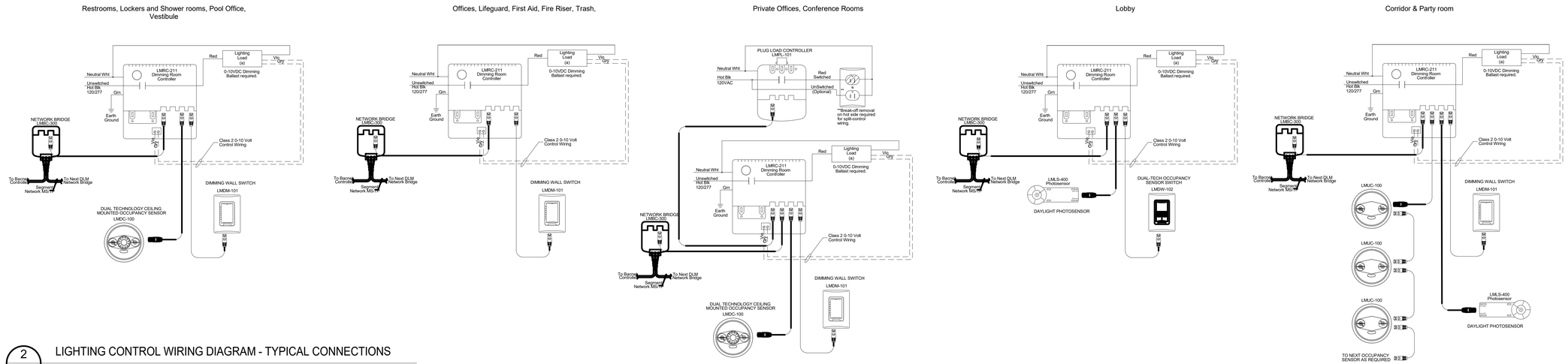

2 LIGHTING CONTROL WIRING DIAGRAM - TYPICAL CONNECTIONS

LIGHTING CONTROL DIAGRAM NOTES AND SEQUENCE OF OPERATION:

1. THE QUANTITIES SHOWN DO NOT REFLECT ACTUAL DEVICE QUANTITIES; THIS LIGHTING CONTROL DIAGRAM IS FOR CONCEPTUAL PURPOSES. MANUFACTURE TO CONFIRM AND PROVIDE DEVICES UPON RECEIPT OF LIGHTING PLANS. CONTRACTOR SHALL PROCURE ALL THESE DEVICES COMPLETE AND INSTALL COMPLETE AND IN FULL WORKING ORDER.

2. NETWORK DEVICES (I.E: ETHERNET NETWORK SWITCHES) MAY BE REQUIRED WHICH ARE NOT ILLUSTRATED. MANUFACTURE TO CONFIRM AND PROVIDE UPON RECEIPT OF LIGHTING PLAN. CONTRACTOR SHALL OBTAIN ALL DEVICES AND INSTALL COMPLETE.

3. MANUFACTURE TO CREATE A COMPLETE SENSOR LAYOUT WITH ALL NECESSARY COMPONENTS, VERIFYING COVERAGE AND SENSOR QUANTITIES, UPON RECEIPT OF A LIGHTING PLAN. PROVIDE ALL DEVICES COMPLETE AND FULLY FUNCTIONAL.

4. CLEARLY LABEL THE FUNCTION OF EACH BUTTON. I.E. "LIGHT ON" OR "LIGHTS OFF" OR "ZONE 1" OR "ZONE 2" WHEN THERE IS MORE THAN ONE SWITCH LEG OR "LIGHTING OVERRIDE" FOR THE LIGHTING CONTROL OVERRIDES.

GENERAL NOTES:

A. NETWORK SWITCHES SHALL NOT BE CONNECTED TO THE BUILDING DATA NETWORK. COORDINATE WITH THE IT CONSULTANT FOR WIFI CONNECTION.

B. ANY UTP CABLE USED FOR THIS SYSTEM SHALL NOT USE BLUE/ WHITE CABLE COLORS ASSIGNED TO TELECOM. RUN CABLE 12" FROM TELECOM CABLE.

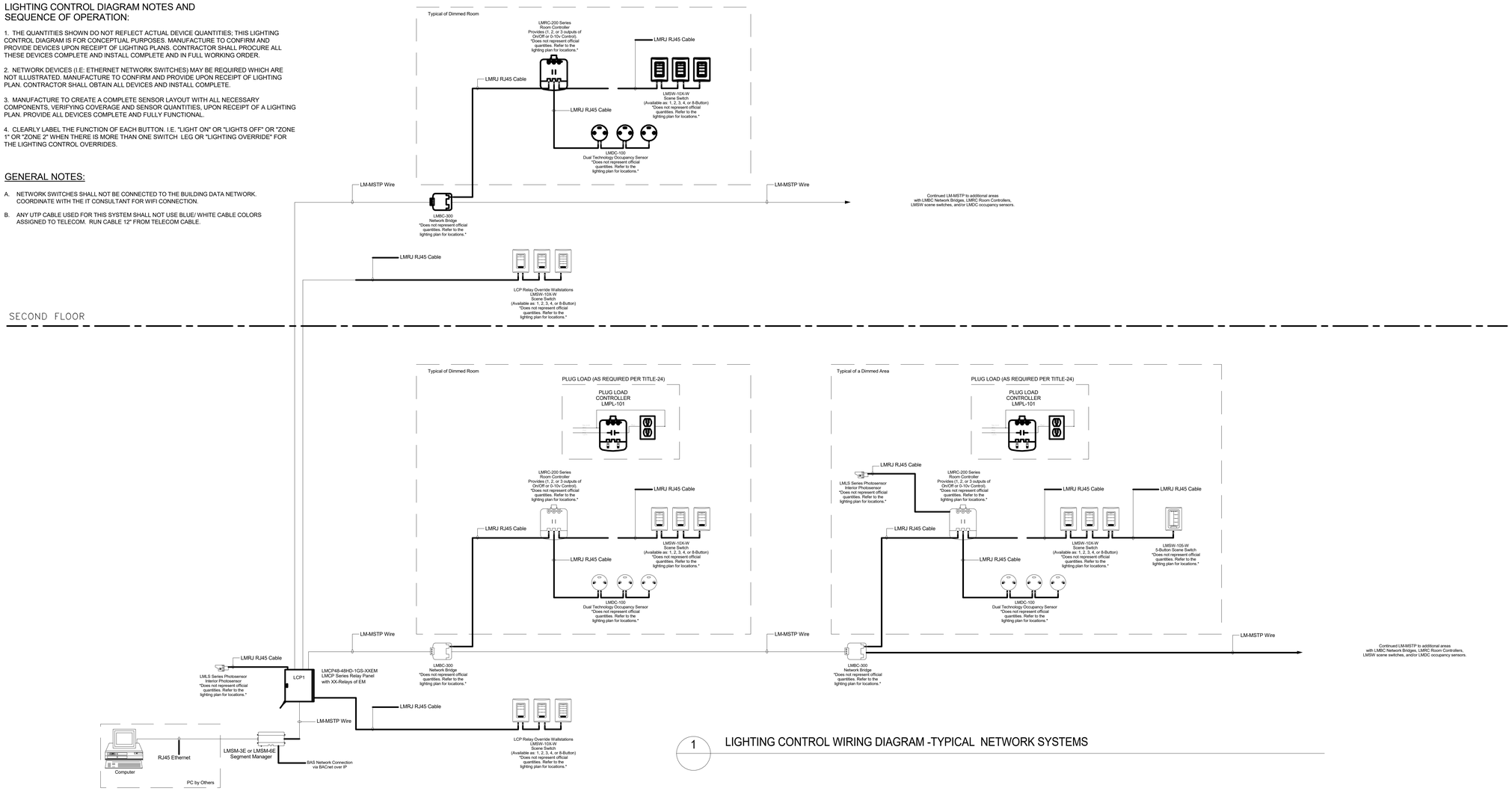

1 LIGHTING CONTROL WIRING DIAGRAM -TYPICAL NETWORK SYSTEMS

els architecture+ urban design
2040 Addison St, Berkeley, CA 94704
510.549.2929 | elsarch.com

PROJECT:

PIEDMONT COMMUNITY POOL

777 MAGNOLIA AVENUE PIEDMONT, CA 94611

CLIENT:

CITY OF PIEDMONT

120 VISTA AVENUE PIEDMONT, CA 94611

PROJECT TEAM:

ARCHITECT:
ELS ARCHITECTURE AND URBAN DESIGN
2040 Addison Street
Berkeley, CA 94704
P: 510.549.2929

CIVIL ENGINEER:
BKF ENGINEERS
4670 Willow Road, Suite 250
Pleasanton, CA 94588
P: (925) 396-7704

LANDSCAPE ARCHITECT:
SWA
2200 Bridgeway
Sausalito, CA 94965
P: 415.332.5100

STRUCTURAL ENGINEER:
FORELL/ELSESSER ENGINEERS, INC.
160 Pine Street, 6th Floor
San Francisco, CA 94111
P: 415.837.0700

MEP / FIRE PROTECTION:
GUTTMANN & BLAEVOET
1620 Montgomery Street, Suite 230
San Francisco, CA 94111
P: 415.655.4000

AQUATICS:
AQUATICS DESIGN GROUP
2226 Faraday Avenue
Carlsbad, CA 92008
P: 760.438.8400

SPECIFICATIONS
TOPFLIGHT SPECS
49 Geary Street, Suite 230
San Francisco, CA 94108-5748
P: 415.546.6033

REVISION

NUMBER	DATE	DESCRIPTION

ISSUE:
100% DESIGN DEVELOPMENT

DATE:
APRIL 30, 2022

STAMP:

NOT FOR CONSTRUCTION

SHEET TITLE:
LIGHTING CONTROL DIAGRAM

SHEET NUMBER:
E602

Pad Arrangements for Style IIA, IIB, IIC, IIF, and IIH Transformers
Notes
1. Primary conduits must be centered in the window.
2. Secondary conduits shall be grouped towards the front of the pad.
3. Precast pads do not have cut off walls.
4. A 6-foot minimum separation shall be maintained between ground rods.
5. The ground wire must be a continuous wire that runs from the outside ground rod, under the pad, to the primary window, then above the pad from the primary window, through the secondary window, to the secondary ground rod as shown below.

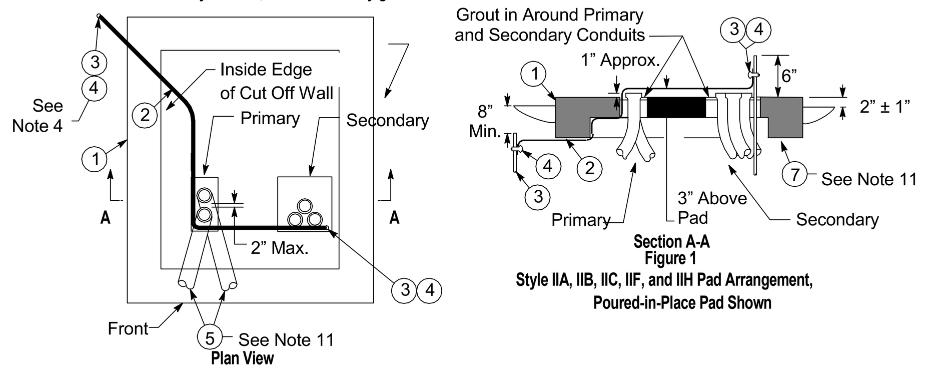

Figure 1
Style IIA, IIB, IIC, IIF, and IIH Pad Arrangement, Poured-in-Place Pad Shown

Pad Arrangements for Style IID, IIE, and IIG Transformers
Notes
1. Install primary conduits as shown. Keep single primary conduit installation to the left as indicated to reduce strain on elbow terminators.
2. Secondary conduits shall be grouped towards the front of the pad.
3. Precast pads do not have cut off walls.
4. A 6-foot minimum separation shall be maintained between ground rods.
5. The ground wire must be a continuous wire that runs from the outside ground rod, under the pad, to the primary window, then above the pad from the primary window, through the secondary window, to the secondary ground rod as shown below.

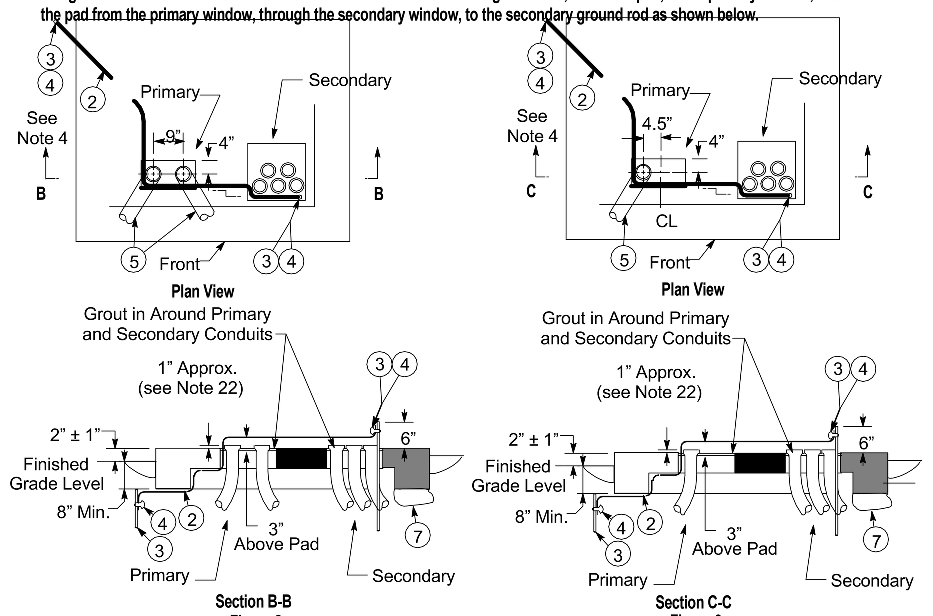

Figure 2 — Loop Installation of Style IID, IIE, and IIG Pad Arrangement, Poured-in-Place Pad Shown
Figure 3 — Radial Installation of Style IID, IIE, and IIG Pad Arrangement, Poured-in-Place Pad Shown

TRANSFORMER PAD COMPONENT SCHEDULE

ITEM	QUANTITY	DESCRIPTION	CODE	DOCUMENT
1	1	PAD, CONCRETE, REINFORCED (SEE PAGE 5)	-	--
2	AS REQUIRED	WIRE, #2 AWG, SOLID, SOFT DRAWN, BARE COPPER	290074	-
3	2	GROUND ROD, 5/8" x 8', COPPER CLAD	187013	13109
4	2	CLAMP, GROUND ROD, FOR ITEM 3	187012	62288
5	AS REQUIRED	CONDUIT, TYPE AND SIZE AS REQUIRED	-	-
6	AS REQUIRED	REINFORCING STEEL, NUMBER 4	-	-
7	AS REQUIRED	COMPACTED BACKFILL	-	-
8	TOOL	BOLT, EYE, 7/8" DIAMETER x 1-1/2" LONG, 1-1/2" INSIDE DIAMETER, SHOULDER-TYPE	190013	-

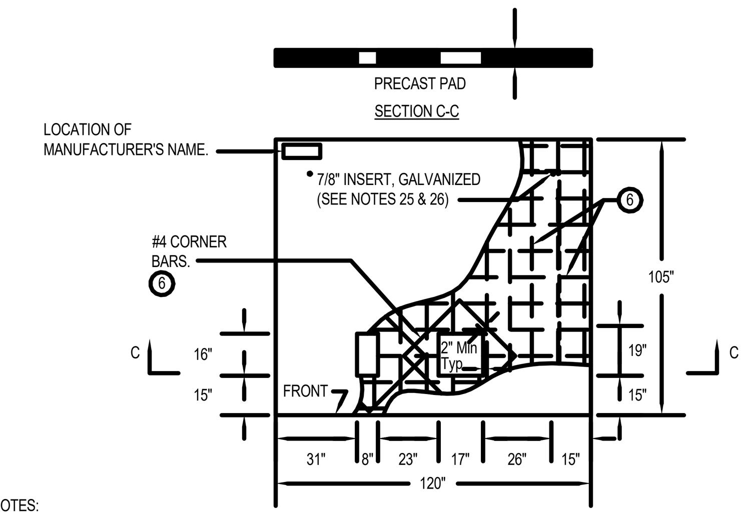

TRANSFORMER PAD NOTES:
General Information
1. When a pad is installed by the customer, that customer shall provide all materials. In areas of known unusually soft soil conditions, PG&E will require special treatment as specified in Notes 13, 14, and 15. Before pouring or setting the pad, the customer or contractor will request an inspection by PG&E to approve the installation. PG&E shall determine the acceptability of each pad installation.
2. The installation of the pad includes the two ground rods and the interconnecting ground wire.

Application
3. If a pad-mounted transformer cannot be located away from vehicular traffic, the customer shall provide suitable barriers for the protection of the transformer. PG&E shall determine the protection requirements according to Document 051122.
4. If the customer is to use bus duct, the secondary opening is not needed. Grout in the window of precast pads.
5. The pad sizes are based on maximum dimensions, including cooling radiators, of the various manufacturers' transformers.
6. The Style IIE transformers will fit on Style IIB/IIC/IIF pads. The 75 kVA, Style IIE transformer will fit on the largest Style IIE pad. The 300 kVA, Style IIE transformer will fit on the small Style IIE pad. The 2,500 kVA, Style IIE transformer will sit on the old 80" x 106" pad, but the radiators will overhang the pad. (Note: Some 1989 and 1999 Style IIE transformers have radiators that will overhang the pad.)
7. The Style IIG will fit on the largest IIE pad.
8. The Style IIH will fit on the largest IIC/IIF pad.

Construction Notes
9. In general, all equipment pads should be installed as level as practical. Pads supporting oil-filled equipment must be leveled to within 1 inch in 8 feet in all directions.
10. An equipment pad SHALL NOT be placed on an elevated berm, mound or structure either earthen or otherwise when placed in a Flood Plain. If local knowledge of the area in which the equipment is to be placed identifies a high likelihood that uninsulated terminals of the equipment will come in contact with floodwater and the location cannot be moved to a location less likely to have flood levels come in contact with the exposed terminals, a Subsurface Fully Insulated Device should be installed in lieu of the pad mount design. In some cases such as transformers, because of capacity limits of subsurface material coded equipment it may not be possible to provide a transformer of sufficient capacity to serve loads in excess of the capabilities of a 1000 kVA UCD.
11. The transformer pad shall be placed on firm, compacted native material or on engineered fill which has been compacted at least to the requirements of Note 14.
12. The area under the pad shall be excavated to the required grade, or to a depth necessary to reach firm, undisturbed material, whichever is deeper. The material can be considered firm if it cannot be penetrated by thumb except with moderate effort.
13. If firm material has not been reached within a depth of 3 feet, excavate 3 feet beyond the perimeter of the pad and backfill the entire excavated area to the required grade and to the requirements of Note 14.
14. In case it has been necessary to excavate deeper than the required grade to reach firm material, backfill to the required grade in one of the following ways:
    A. Backfill with clean, non-expansive soil compacted to 90% of maximum density. Soil shall be placed in layers not more than 8 inches thick before compaction. Maximum density and in-place density is to be determined by California Test Method No. 216-G, Part I and II respectively, or by ASTM D-1556 and ASTM D-1557 respectively. A copy of the test results may be required by PG&E.
    B. Backfill with soil-cement slurry consisting of one sack of Portland cement per cubic yard and clean native soil or When slurry is used as a backfill material, the customer will not be required to use a poured-in-place pad.
15. In areas of known soft soil conditions, trenches within the pad excavation area for the installation of conduits shall be backfilled in one of the ways specified in Note 14.
16. In addition to the above, precast pads shall be placed on a 3-inch layer of slurry backfill or sand screened level to provide uniform bearing. Conduit windows shall be grouted with non-shrink grout (asphalt or blacktop is not approved for grouting).
17. Concrete shall be designed to attain a strength of 2,500 pounds per square inch (psi) at 28 days. Slump for concrete placement shall not exceed 3 inches. Reinforcing steel shall be per ASTM A615, Grade 40 minimum.
18. A minimum distance of 6 feet shall be maintained between ground rods.
19. Wood-float or light broom finish the top of the slab. Finish all exposed edges with a finishing tool. Vertical edges shall have a 3/4-inch chamfer. Slope exposed horizontal surfaces slightly for drainage. Moist-cure concrete for at least 7 days after pouring. Do not install transformer until 14 days after pouring concrete. See Note 21 for exceptions to this requirement.
20. The transformer may be installed earlier than the 14 days specified above, provided the concrete has attained a compressive strength of at least 1,500 psi obtained as follows (this procedure is permitted only for urgent cases where earlier pouring of pad is not practical):
    A. For a six-sack mix using normal Portland cement, the transformer may be installed after 7 days; or for a six-sack mix using high early-strength cement, the transformer may be installed after 72 hours.
    B. All concrete must be moist-cured to the minimum period specified above before installing the transformer.
    C. Verify the required strength by either concrete cylinder test or Schmidt hammer test.
22. Belled ends of conduits should be placed approximately 1 inch above the concrete pad surface. If belled ends are removed, install end bell fittings. Temporarily plug or cap all conduits.
23. Only PG&E-approved utility electric-service-related equipment and structures may be installed in the area beneath the transformer pad. The area 6 feet deep and 12 inches horizontally around the pad shall be free of all foreign substructures.

Construction Notes for Precast Pads
24. Concrete shall be designed to attain a strength of 2,500 psi in 28 days.
25. Inserts and securing of inserts shall be of sufficient strength to lift the pad. A minimum of three inserts with 7/8-inch diameter, UNC thread and 2-1/4 inch inside depth, steel, galvanized with temporary plugs shall be provided.
26. Inserts shall be installed flush with the surface of the pad.
27. Reinforcing bars shall be as per ASTM A615, Grade 40 minimum.
28. All exposed edges shall have a 3/4-inch chamfer or radius.
29. Surface shall have a light broom or wood-float finish.
30. The surface of the pad shall be level and flat.
31. Precast pads shall be permanently identified with manufacturer's name (for location see detail) and have the weight stenciled on top of the pad

1 UTILITY TRANSFORMER PAD DETAIL
NOT TO SCALE
NOTE::
1. TRANSFORMER PAD SHALL BE TYPE IIB / IIF (112" X 98")

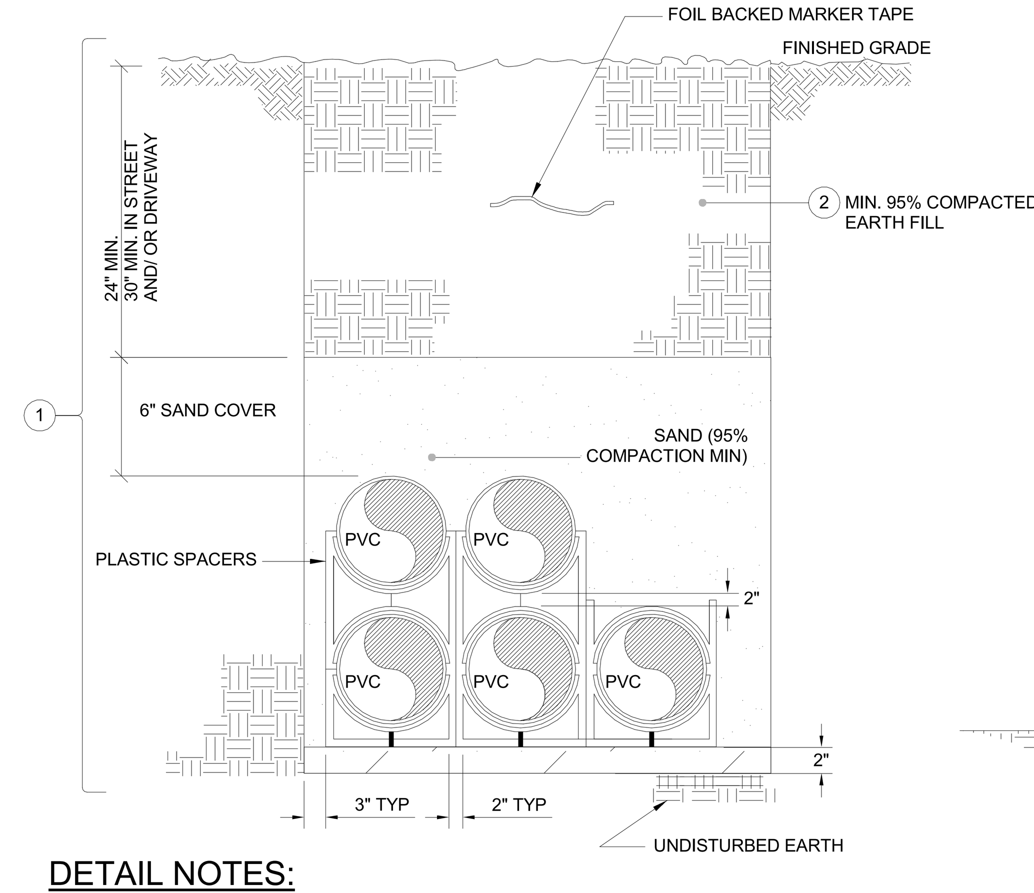

DETAIL NOTES:
1. BACKFILL - THAT CONTAINS OCCASIONAL, ROUNDED ROCKS THAT ARE 1/2 INCH IN DIAMETER OR LESS TO BE ACCEPTABLE BACKFILL. CRUSHED ROCK OR SHARP-EDGED MATERIALS OF ANY KIND, OR BACKFILL CONTAINING EASILY BREAKABLE DIRT CLODS LARGER THAN 6 INCHES IN DIAMETER, ARE NOT ACCEPTABLE. BACKFILL WITH ROCKS GREATER THAN 3 INCHES IN ANY DIMENSION WITHIN 6 INCHES OF THE TOP OF THE PIPE OR CONDUIT OR LESS THAN 12 INCHES BELOW THE PAVEMENT SUBGRADE.

2 TRENCH DETAIL
NOT TO SCALE

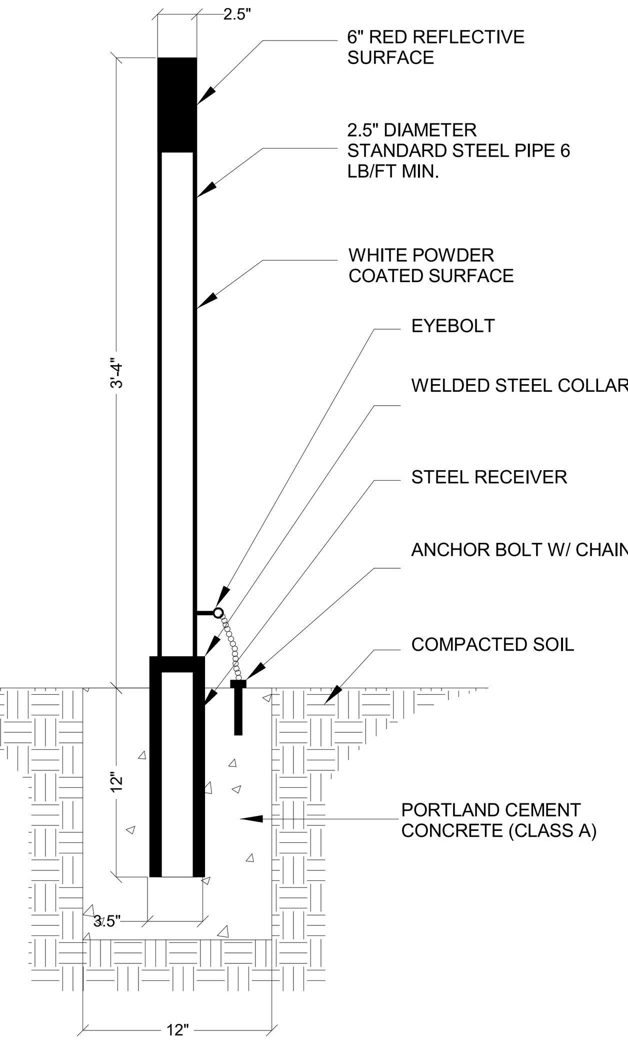

3 REMOVABLE METAL BOLLARD
NOT TO SCALE

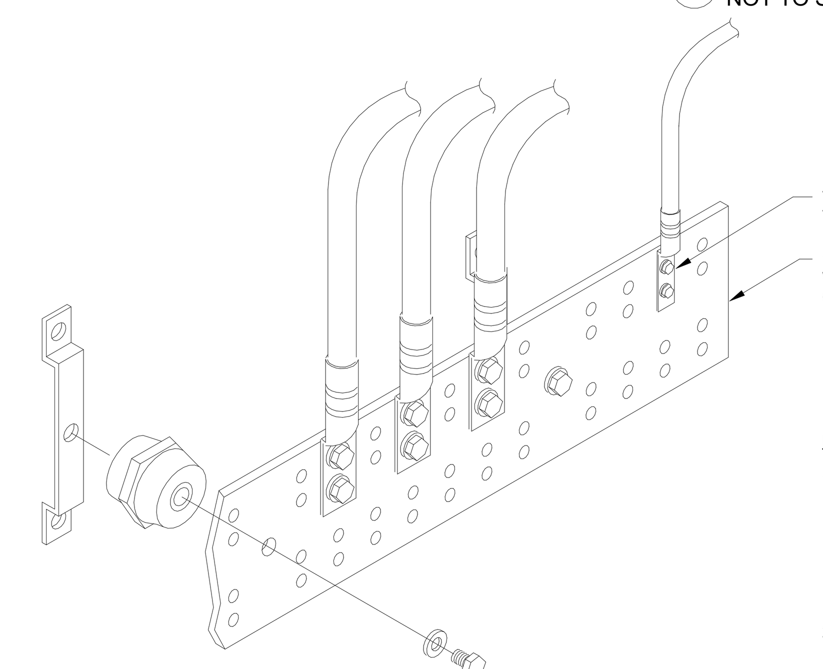

NOTES:
1. NOT ALL PARTS AND PART NUMBERS ARE SHOWN. THE CONTRACTOR IS RESPONSIBLE FOR A COMPLETE WORKING INSTALLATION INCLUDING MISCELLANEOUS APPURTENANCES. THE CONTRACTOR SHALL ISSUE A SUBSTITUTION REQUEST FOR CHANGES TO THIS DETAIL. CONTRACTOR SHALL PROVIDE PLENUM RATED SHEATH WHERE REQUIRED.
2. ALL GROUNDING CONNECTORS SHOWN SHALL BE DOUBLE LUG. DOUBLE COMPRESSION TERMINATIONS ON BOTH ENDS.

4 GROUNDING DETAIL - MAIN GROUND BAR
NOT TO SCALE

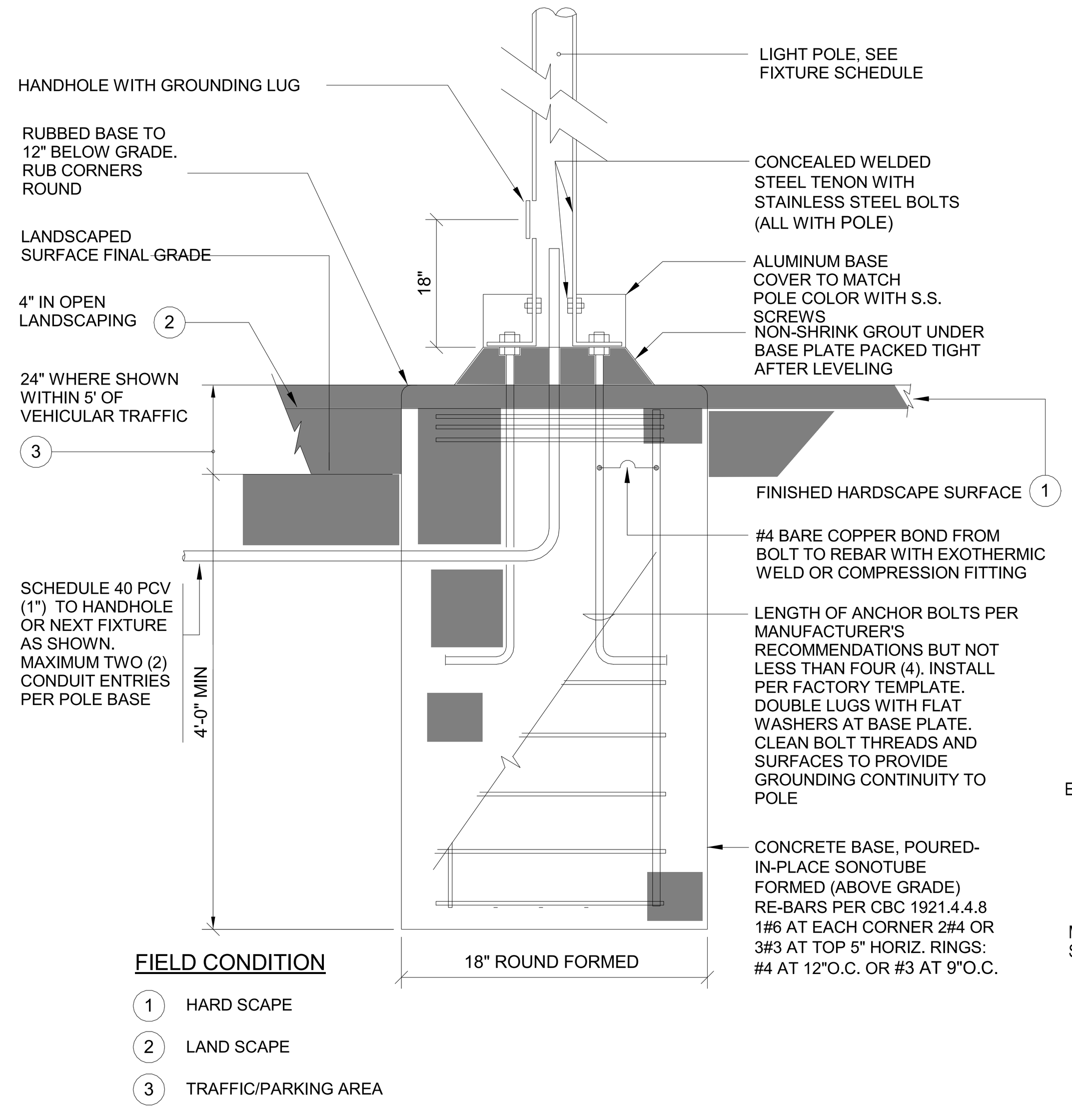

FIELD CONDITION
1. HARD SCAPE
2. LAND SCAPE
3. TRAFFIC/PARKING AREA

5 TYPICAL SITE LIGHTING FIXTURE POLE BASE DETAIL
NOT TO SCALE

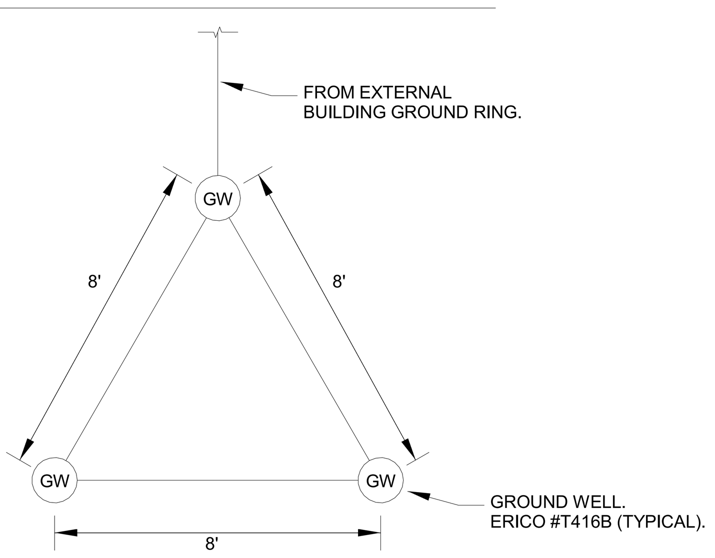

6 TYPICAL LAYOUT OF GROUND WELLS
NOT TO SCALE

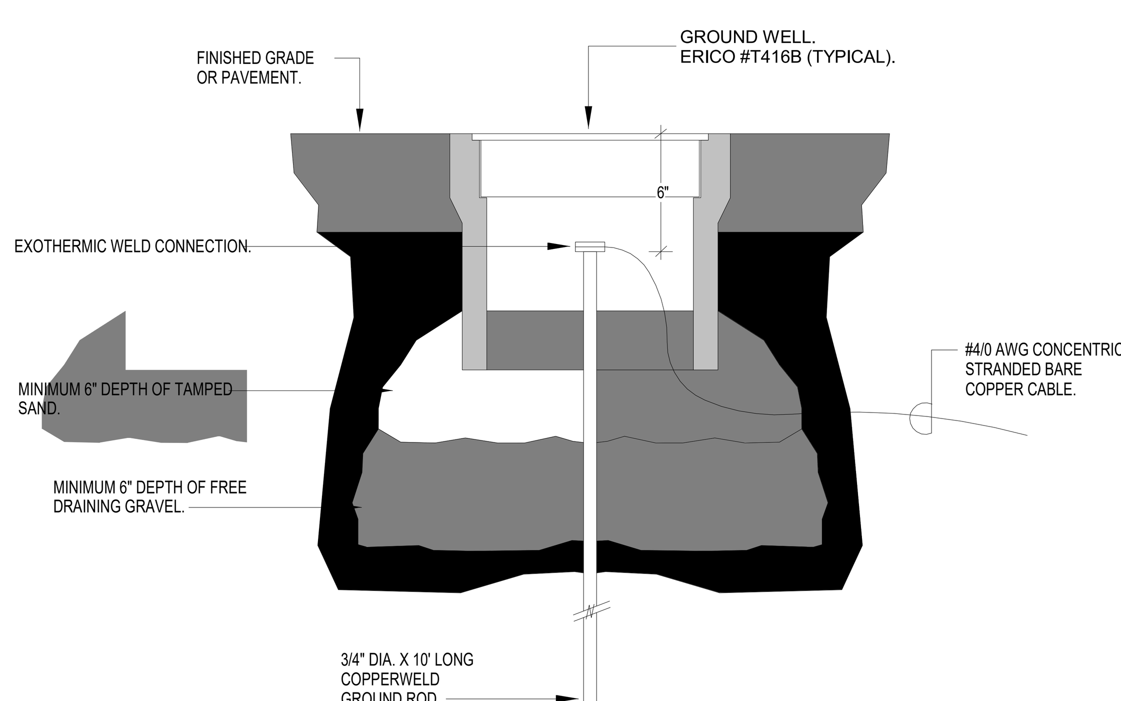

7 GROUND WELL DETAIL
NOT TO SCALE

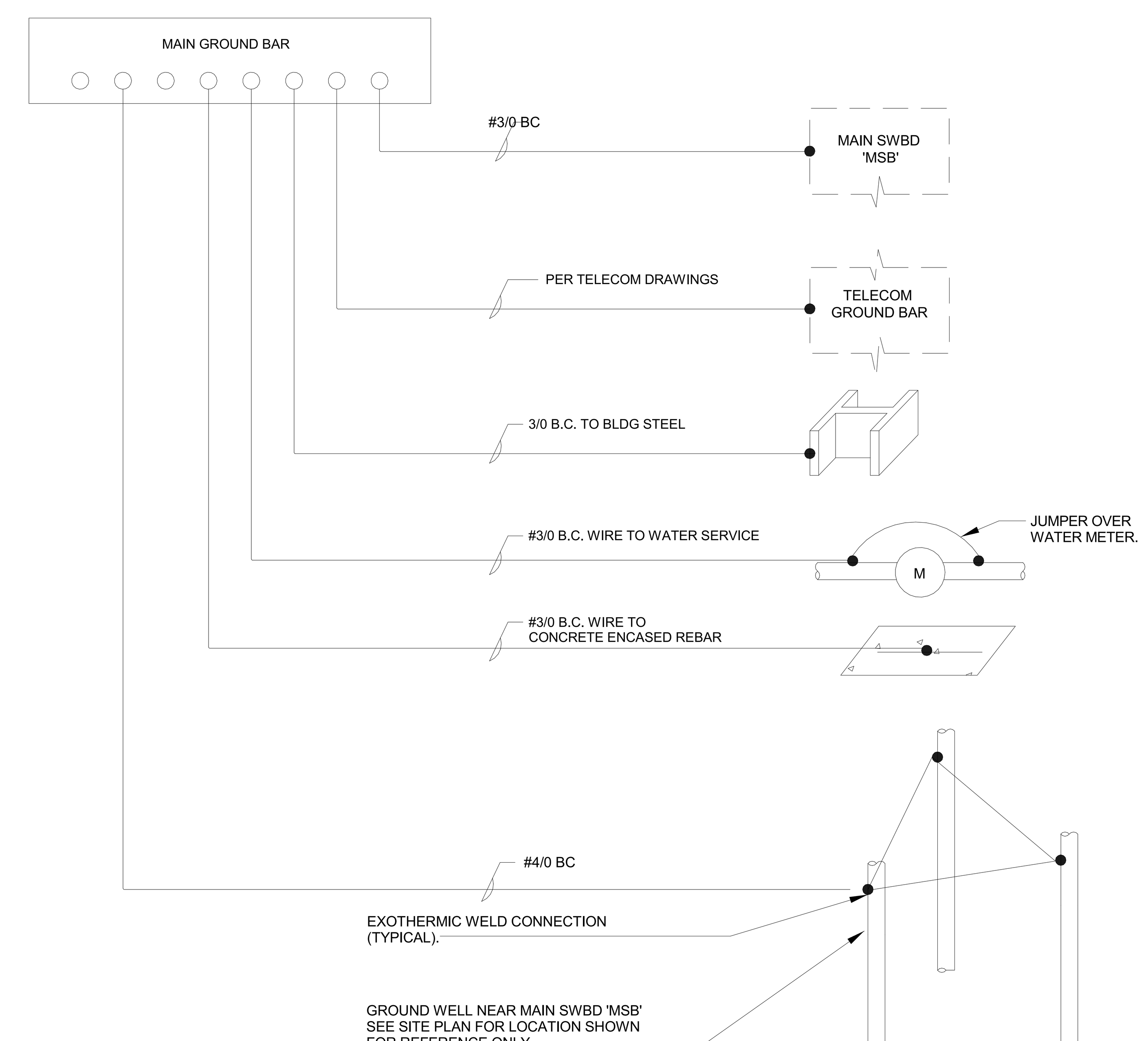

8 GROUNDING DETAIL
NOT TO SCALE

els architecture+ urban design
2040 Addison St, Berkeley, CA 94704
510.549.2929 | elsarch.com

PROJECT:
PIEDMONT COMMUNITY POOL
777 MAGNOLIA AVENUE PIEDMONT, CA 94611

CLIENT:
CITY OF PIEDMONT
120 VISTA AVENUE PIEDMONT, CA 94611

PROJECT TEAM:

ARCHITECT:
ELS ARCHITECTURE AND URBAN DESIGN
2040 Addison Street
Berkeley, CA 94704
P: 510.549.2929

CIVIL ENGINEER:
BKF ENGINEERS
4670 Willow Road, Suite 250
Pleasanton, CA 94588
P: (925) 396-7704

LANDSCAPE ARCHITECT:
SWA
2200 Bridgeway
Sausalito, CA 94965
P: 415.332.5100

STRUCTURAL ENGINEER:
FORELL/ELSESSER ENGINEERS, INC.
160 Pine Street, 6th Floor
San Francisco, CA 94111
P: 415.837.0700

MEP / FIRE PROTECTION:
GUTTMANN & BLAEVOET
1620 Montgomery Street, Suite 230
San Francisco, CA 94111
P: 415.655.4000

AQUATICS:
AQUATICS DESIGN GROUP
2226 Faraday Avenue
Carlsbad, CA 92008
P: 760.438.8400

SPECIFICATIONS
TOPFLIGHT SPECS
49 Geary Street, Suite 230
San Francisco, CA 94108-5748
P: 415.546.6033

REVISION

NUMBER	DATE	DESCRIPTION

ISSUE:
100% DESIGN DEVELOPMENT
DATE:
APRIL 30, 2022
STAMP:
NOT FOR CONSTRUCTION

SHEET TITLE:
DETAILS

SHEET NUMBER:
E701

GENERAL NOTES

1. THE PURPOSE OF THIS SHEET IS TO ILLUSTRATE AND DEFINE TYPICAL SYMBOLS, AND SYSTEMS OF SYMBOLS, WHICH MAY OCCUR ON THE TELECOMMUNICATIONS DRAWINGS. THE ILLUSTRATION OF A SYMBOL, OR SYSTEM OF SYMBOLS, ON THIS SHEET DOES NOT NECESSARILY INDICATE THAT THE BUILDING ITEM OF THE DESCRIBED SYSTEM BY THE SYMBOL IS USED AS PART OF THIS PROJECT. REFER TO THE PLANS, ELEVATIONS, SECTIONS, SCHEDULES, DETAILS, AND SPECIFICATIONS TO DETERMINE THE SCOPE OF THE WORK.
2. THE WORK - INCLUDING MATERIALS, METHODS, ASSEMBLIES, ETC - SHALL COMPLY WITH THE MINIMUM REQUIREMENTS OF THE GOVERNING LAWS, ORDINANCES, AND REGULATIONS OF ALL FEDERAL, STATE, AND LOCAL AUTHORITIES HAVING JURISDICTION OVER THE PROJECT, AS WELL AS THOSE GREATER REQUIREMENTS INDICATED BY THE CONTRACT DOCUMENTS. NO PART OF THE CONTRACT DOCUMENTS MAY BE CONSTRUED TO REQUIRE OR PERMIT WORK CONTRARY TO A GOVERNING LAW, ORDINANCE, OR REGULATION.
3. THE TELECOMMUNICATIONS DRAWINGS ARE PART OF THE OVERALL PROJECT DRAWINGS WHICH, WHEN COMPLETE, CONSISTS OF DRAWINGS LISTED BY THE "INDEX OF DRAWINGS". THE WORK DESCRIBED BY THE DRAWINGS OF ANY ONE DISCIPLINE MAY BE AFFECTED BY THE WORK AND REQUIREMENTS DESCRIBED ON DRAWINGS OF ANOTHER DISCIPLINE AND MAY REQUIRE REFERENCE TO THE DRAWINGS OF ANOTHER DISCIPLINE. PARTIAL SETS OF DRAWINGS ARE INCOMPLETE AND SHOULD NOT BE DISTRIBUTED OR UTILIZED BY THE CONTRACTOR. MANAGE, SUPERVISE, REVIEW, AND COORDINATE THE WORK OF SUB-CONTRACTORS, TRADES, AND SUPPLIERS WITH THE REQUIREMENTS OF THE CONTRACT DOCUMENTS BEFORE COMMENCING CONSTRUCTION AND TO ASSURE THAT PARTIES ARE AWARE OF REQUIREMENTS, REGARDLESS OF WHERE THE REQUIREMENTS OCCUR IN THE CONTRACT DOCUMENTS, WHICH MAY AFFECT THE WORK OF THAT PARTY.
4. THE ARCHITECTURAL DRAWINGS ESTABLISH AND COORDINATE THE FINISHED APPEARANCE AND EXACT LOCATION OF EXPOSED ELEMENTS OF THE WORK OF TRADES, INCLUDING THAT WORK THAT IS ILLUSTRATED PRIMARILY ON THESE DRAWINGS. LOCATIONS SHOWN ON THESE DRAWINGS ARE DIAGRAMMATIC. REFER TO ARCHITECTURAL DRAWINGS FOR DIMENSIONED LOCATIONS.
5. MAINTAIN A COPY OF THE SPECIFICATIONS AND DRAWINGS AT THE JOB SITE. PRESENT THE SPECIFICATIONS AND DRAWINGS UPON REQUEST. MAINTAIN DAILY MARKUPS OF ACTUAL INSTALLATION AND PRESENT FOR REVIEW UPON REQUEST.
6. REFER TO WRITTEN SPECIFICATIONS FOR PROJECT SCOPE, GENERAL REQUIREMENTS, PRODUCT SPECIFICATIONS, AND INSTALLATION REQUIREMENTS. WHERE QUANTITY AND QUALITY DIFFER, THE HIGHER OF EACH SHALL PREVAIL.
7. PROVIDE NECESSARY EQUIPMENT AND ACCESSORIES FOR A FULLY FUNCTIONAL SYSTEM THAT MEETS INTENDED DESIGN WHETHER EXPRESSLY SPECIFIED OR NOT AND ALL INCIDENTALS PERTAINING TO THE INSTALLATION TO FORM A COMPLETE AND WORKING SYSTEM.
8. PROVIDE MATERIALS AND EQUIPMENT LISTED BY UNDERWRITERS LABORATORIES FOR THE PURPOSE USED AND BEARING THEIR LABEL.
9. PRIOR TO PERFORMING WORK, IMMEDIATELY NOTIFY THE OWNER, OR OWNER'S REPRESENTATIVE, IN WRITING OF OBSERVATIONS OR CONDITIONS DISCOVERED THAT WOULD PREVENT INSTALLATION ACCORDING TO DRAWINGS AND SPECIFICATIONS.
10. BRING A SET OF MARKED UP PLANS TO WEEKLY CONSTRUCTION MEETINGS FOR OWNER'S, OR OWNER'S REPRESENTATIVE'S, APPROVAL PRIOR TO PRODUCTION OF AS-BUILT DRAWINGS FOR RECORD DOCUMENTATION.
11. REMOVE ABANDONED CABLING LEFT OVER CONDUIT, WIRE, SCRAPS, ETC. LEAVE PREMISES CLEAN AND FREE OF TRASH OR DEBRIS RESULTING FROM WORK. AND PROPERLY RECYCLE APPLICABLE MATERIAL ACCORDING TO ALL CODE REQUIREMENTS FOR SUCH MATERIAL.
12. INSTALL EQUIPMENT, DEVICES, AND PATHWAYS, SUCH AS CABLE TRAY, RUNWAY, CONDUITS, CABLE HANGERS, AND PULLBOXES, ETC., ACCORDING TO STATE AND LOCAL CODES AND REGULATORY REQUIREMENTS FOR SEISMIC BRACING.
13. CONDUIT ROUTING, WHERE SHOWN ON DRAWINGS, IS DIAGRAMMATIC IN NATURE. FIELD DETERMINE CONDUIT ROUTES TO SUIT FIELD CONDITIONS WHILE CONFORMING TO SPECIFICATIONS. PREPARE SHOP DRAWINGS SHOWING EXACT CONDUIT ROUTES, INDICATING PENETRATION TYPES (e.g., FRAMED WALL, CONCRETE WALL, ETC.). COORDINATE REQUIREMENTS WITH OTHER TRADES.
14. INSTALL CONDUIT PATHWAYS PER TIA/EIA-568-B AND BICSI TDMM AND BEST INDUSTRY STANDARDS AND PRACTICES.
15. ROUTE CONDUIT, CABLE TRAYS, J-HOOKS AND OTHER PATHWAYS PERPENDICULAR OR PARALLEL TO BUILDING LINES, IN GENERAL. CABLING INSTALLED AT ANGLES AND SKEWED ABOVE CEILINGS WILL NOT BE ALLOWED.
16. CONDUITS WITH LESS THEN 2" INSIDE DIAMETER WILL HAVE A BEND RADIUS OF NO LESS THAN 6 TIMES THE INSIDE DIAMETER. CONDUITS WITH A 2" OR GREATER INSIDE DIAMETER WILL HAVE A BEND RADIUS OF NO LESS THAN 10 TIMES THE INSIDE DIAMETER.
17. CONDUIT RUNS SHALL NOT EXCEED 180 DEGREES OR TWO 90-DEGREE BENDS WITHOUT AN APPROPRIATE NEMA RATED PULL BOX OR/AND INCREASE CONDUIT BY ONE TRADE SIZE FOR EACH ADDITIONAL BEND OF UP TO 90 DEGREES, UNLESS LAST BEND IS WITHIN 12 INCHES OF THE CONDUIT END.
18. WHEN ROUTING CONDUIT IN CONCRETE, MAINTAIN A GRADUATED BEND RADIUS TO MAINTAIN CONDUIT CAPACITY. THE USE OF 90-DEGREE 'ELBOW' FITTINGS IS EXPRESSLY PROHIBITED UNLESS PRIOR AUTHORIZATION IS RECEIVED FROM OWNER, OR OWNER'S REPRESENTATIVE, IN WRITING.
19. PROPERLY FIRE SEAL CONDUIT AND RACEWAY PENETRATIONS THROUGH FIRE RATED WALLS AND FLOORS TO MAINTAIN THE FIRE SEPARATION RATING. PROVIDE FIRE SEALING ASSEMBLIES THAT ARE UL LISTED FOR THE APPLICATION. COORDINATE REQUIREMENTS WITH LOCAL FIRE MARSHALL PRIOR TO INSTALLATION. DO NOT MIX PRODUCTS BETWEEN MANUFACTURED ASSEMBLIES.
20. PROVIDE EXPANSION/DEFLECTION FITTINGS FOR CONDUITS AT STRUCTURAL EXPANSION JOINT CROSSINGS.
21. PROVIDE PLASTIC BUSHINGS ON EXPOSED ENDS OF CONDUIT AND SLEEVES, WHETHER VISIBLE OR NOT.
22. PROVIDE EMT 4" TRADE SIZE CONDUITS FOR BACKBONE PATHWAYS WITH 40" MINIMUM BEND RADIUS FITTINGS, UON.
23. PROVIDE MINIMUM OF 1 INCH SIZE CONDUIT FOR HORIZONTAL DISTRIBUTION AND TELECOMMUNICATIONS DEVICES. CONSOLIDATION OF CONDUITS IS ALLOWED WHEN EQUAL OR GREATER CONSOLIDATED AREA IS PROVIDED.
24. PROVIDE DEDICATED CONDUIT STUB PER TELECOMMUNICATIONS DEVICE BOX. DAISY-CHAINING DEVICE BOXES IS PROHIBITED UNLESS SPECIFICALLY NOTED ON FLOOR PLANS.
25. CONDULET ("LB", ETC.) FITTINGS ARE EXPRESSLY PROHIBITED FOR TELECOMMUNICATIONS SYSTEM PATHWAYS.
26. PROVIDE A PULL STRING OR PULL ROPE IN EMPTY/UNUSED DISTRIBUTION CONDUITS AND CONDUITS SERVING TELECOMMUNICATIONS DEVICES SUITABLE FOR A 200 LB PULL TENSION MINIMUM.
27. PROVIDE DEDICATED SUPPORTS (e.g., CLIPS & WIRES) FOR CABLE SUPPORT HANGERS (OR SIMILAR PATHWAY COMPONENTS) INTENDED FOR TELECOMMUNICATIONS CABLES.

GENERAL NOTES

28. DO NOT SHARE SUPPORTS WITH OTHER TRADES/SYSTEMS, INCLUDING SECURITY AND/OR AUDIOVISUAL SYSTEMS. PROVIDE WIRES, HANGERS, ETC. SEPARATE FROM THE CEILING SUPPORT SYSTEM AND OTHER INSTALLED SYSTEMS, A DEDICATED SUPPORT SYSTEM IS REQUIRED FOR TELECOMMUNICATIONS CABLING.
29. PROVIDE TELECOMMUNICATION CONDUITS FOR CABLING ROUTED THROUGH NON-ACCESSIBLE CEILING SPACE (e.g., 'HARD LID' CEILING), UON. SIZE CONDUITS TO MAINTAIN A FILL CAPACITY NO LESS THAN 40% PLUS 50% SPARE CAPACITY.
30. INSTALL TELECOMMUNICATIONS DEVICES AT HEIGHTS NOTED ON SYMBOLS LIST OR DEVICE SCHEDULE, UNLESS OTHERWISE SHOWN ON THE DRAWINGS OR STATED IN SPECIFICATIONS. MOUNTING HEIGHTS ARE FROM FINISHED FLOOR TO THE CENTERLINE OF THE DEVICE. REFER TO ARCHITECTURAL ELEVATION DRAWINGS FOR ADDITIONAL INFORMATION OR EXACT LOCATIONS OF WALL/CEILING/FLOOR MOUNTED DEVICES. VERIFY HEIGHTS ARE THE SAME AS ACCOMPANYING POWER RECEPTACLES AND NOTIFY OWNER, OR OWNER'S REPRESENTATIVE OF ANY DISCREPANCY.
31. PROVIDE A 24" MINIMUM SEPARATION BETWEEN 'BACK-TO-BACK' TELECOMMUNICATION POWER OR SIGNAL DEVICES IN FRAMED WALLS.
32. DO NOT TIE CABLES TO OTHER STRUCTURES NOT INTENDED FOR THIS SPECIFIC USE. DO NOT TIE CABLES TO CABLE TRAY.
33. ROUTE TELECOMMUNICATIONS CABLES PERPENDICULAR OR PARALLEL TO BUILDING LINES, IN GENERAL. ROUTE TELECOMMUNICATIONS CABLES NO LESS THAN 6 INCHES FROM ANY POWER SOURCE OR FLORESCENT LIGHTING FIXTURE, AND NO LESS THAN 4 FEET FROM ANY TRANSFORMER OR MOTOR.
34. GROUP AND DRESS EXPOSED TELECOMMUNICATIONS CABLE GROUPS USING VELCRO TIES, UON. GROUP NO MORE THAN 20 CABLES IN A SINGLE BUNDLE AS ESTABLISHED FOR PoE EQUIPMENT.
35. LABEL TELECOMMUNICATIONS CABLES ACCORDING TO SPECIFICATIONS. PROVIDE LABELS AT BOTH ENDS, FACEPLATES, PATCH PANELS, ETC. LABELING SCHEMA SHALL BE COORDINATED SO THAT ALL LABELING, WHETHER ON FACEPLATE OR CABLE MATCHES CABLE DESCRIPTORS END TO END. PROVIDE SAMPLE LABELS TO THE OWNER, OR OWNER'S REPRESENTATIVE AND OBTAIN WRITTEN APPROVAL PRIOR TO LABELING (VERIFY FORMAT AND REQUIRED FIELDS OF INFORMATION).
36. COMPONENTS NOT RELATED TO THE SUPPORT OF THE TELECOMMUNICATIONS ROOM(S) FUNCTION (E.G.,PIPING, DUCTWORK, PNEUMATIC TUBING, ETC.) SHALL NOT BE INSTALLED IN, PASS THROUGH, OR ENTER THE TELECOMMUNICATIONS ROOM.
37. IT IS FORBIDDEN TO ROUTE ANY LIQUID CARRYING SYSTEMS, INCLUDING VALVES OR RUBBER TUBING COMPONENTS CONTAINING LIQUID THROUGH TELECOM ROOMS AND SPACES
38. CONDUIT AND INFRASTRUCTURE FOR TELECOM SHALL BE COORDINATED BETWEEN ELECTRICAL CONTRACTOR AND TELECOM CONTRACTOR

SCOPE OF WORK TELECOM

THIS PROJECT CONSISTS OF NEW CABLING INFRASTRUCTURE, CONSISTING OF CAT-6A HORIZONTAL CABLING TO ALL LOCATIONS SHOWN ON THE DRAWINGS. EACH STATION IS TO RECEIVE A COMPLIMENT OF 2 NETWORK CABLES AS LISTED WITHIN THE PROJECT SPECIFICATIONS. CABLING SHALL ROUTE TO THE MDF/IDF TERMINATION ROOM, WHERE IT SHALL BE CONNECTED TO CATEGORY 6A PATCH PANELS, ALONG WITH INTERMEDIATE PATCH PANELS FOR VOICE PATCHING.
NEW J-HOOKS SHALL BE PROVIDED AND INSTALLED TO SUPPORT CABLING WITHIN THE BUILDING.

ALL CABLING SHALL BE TERMINATED, TESTED AND CERTIFIED PER EIA/TIA STANDARDS AND PROJECT SPECIFICATIONS.

SCOPE OF WORK PAGING

THIS PROJECT CONSISTS OF NEW ZONED PAGING / PUBLIC ADDRESS SYSTEM WHICH SHALL INCLUDE ALL AMPLIFIERS, ZONE CONTROLLERS, CABLING, INDOOR AND OUTDOOR SURFACE OR FLUSH MOUNTED SPEAKERS. PROVIDE ALL CONDUIT INFRASTRUCTURE TO SUPPORT THE PAGING SYSTEM.

CABLING AND AREAS SHALL BE ZONED FOR INTERIOR , EXTERIOR AND ALL CALL AREAS VIA THE ZONE CONTROLLER AND SYSTEM AMPLIFIERS.

THE SYSTEM SHALL OPERATE ON 25V OR 70V CONSTANT VOLTAGE TYPE SPEAKERS.

A ZONE CONTROLLER DIAL UP INTERFACE SHALL BE PROVIDED VIA PHONE AT THE RECEPTION STATION AS WELL AS A TELEPHONE INTERFACE TO THE ANALOG OR IP BASED CUSTOMER PHONE SYSTEM

DRAWING LIST

SYSTEMS LEGEND/SYMBOLS

SYMBOL	DESCRIPTION	MODEL #	MANUFACTURER	BACK BOX	NOTES
	DATA OUTLET(S) WALL MOUNT, 3 CAT6A ACTIVATIONS PER LOCATION U.O.N.			1¼" CONDUIT STUB TO CEILING SPACE OR J-HOOK PATH	ROUTE DIRECT TO IDF/MPOE ROOM
	DATA OUTLETS FLOOR MOUNTED 3 CAT6A ACTIVATIONS	EVOLUTION 8AT	WIREMOLD/LEGRAND	(2) 1¼" CONDUIT STUB TO CEILING SPACE FOR TELECOM AND AV	ROUTE DIRECT TO IDF/MPOE ROOM
(EMER)	EMERGENCY PHONE DIALER, SEE SPECS			1" CONDUIT STUB TO CEILING SPACE	ROUTE DIRECT TO IDF/MPOE ROOM
	DATA OUTLET, WALL PHONE 630B8 MOUNT STYLE WITH CAT6A AND RJ45 OUTLET, STUB TO CEILING AND ACCESSIBLE SPACE.			1" CONDUIT STUB TO CEILING SPACE	ROUTE DIRECT TO IDF/MPOE ROOM
	WALL MOUNTED WIRELESS ACCESS POINT ENCLOSURE & CAT-6A DROP	WAP-ENCL OR EQUAL	WIREMOLD/LEGRAND		ROUTE DIRECT TO IDF/MPOE ROOM
	CEILING MOUNTED WIRELESS ACCESS POINT ENCLOSURE & CAT-6A DROP	WAP-ENCL OR EQUAL	WIREMOLD/LEGRAND		ROUTE DIRECT TO IDF/MPOE ROOM
	TYPICAL XX" X 2" WIRE BASKET CABLE TRAY OR AS NOTED				SEISMIC BRACE AS REQUIRED
	TYPICAL 19" OPEN FRAME 4 POST TELECOM RACK				
	TYPICAL XX" X 2" LADDER RACK CABLE TRAY OR AS NOTED		BLINE OR EQUAL		SEISMIC BRACE AS REQUIRED
	TYPICAL J-HOOK PATH WAY ABOVE CEILING		BLINE OR EQUAL		
	TYPICAL FIRE SLEEVE THROUGH WALL, 4" MINIMUM	FS SERIES	WIREMOLD FLAMESTOPPER		
	TYIPCAL 6" WIDE VERTICAL CABLE MANAGER		BLINE, CHATSWORTH OR PANDUIT		
	TYPICAL 19" OPEN FRAME TELECOM RACK		BLINE, CHATSWORTH OR PANDUIT		
	TYPICAL FIRE RATED PLYWOOD IN TELECOM ROOMS				
	TYPICAL 18" LADDER RACK WALL BRACKET SUPPORT		BLINE, CHATSWORTH OR PANDUIT		
	TYPICAL 15" CENTER HUNG LADDER RACK SUPPORT		BLINE, CHATSWORTH OR PANDUIT		
	GROUND VALUT OR MANHOLE , SEE PLANS FOR TYPE & SIZE		CHRISTY OR EQUAL		
	DAS ANTENNA LOCATION				
	DATA DROP FOR CCTV POE CAMERA CAT6A ACTIVATION, SEE PLANS FOR HT.		FUTURE CAMERA LOCATION PROVIDE PULL STRINGS	1" CONDUITS, DATA OUTLET SHALL TERMINATE WITHIN 24" OF CAMERA	ROUTE DIRECT TO IDF/MPOE ROOM
TGMB	MAIN TELECOMMUNICATIONS GROUND BUSS BAR				
S	PAGING AND MUSIC SYSTEM OVERHEAD CEILING SPEAKER				CEILING
S TYPE AV	AV SYSTEM OVERHEAD SPEAKER CEILING MOUNTED				CEILING
S	PAGING OR MUSIC SYSTEM WALL OR SURFACE SPEAKER				+96" TO +108"
S WP	PAGING OR MUSIC SYSTEM WALL OUTDOOR SURFACE MOUNTED SPEAKER				+96" TO +108"
	DESK MOUNTED MULTI ZONE MICROPHONE				DESK

els architecture+ urban design
2040 Addison St, Berkeley, CA 94704
510.549.2929 | elsarch.com

PROJECT:

PIEDMONT COMMUNITY POOL

777 MAGNOLIA AVENUE PIEDMONT, CA 94611

CLIENT:

CITY OF PIEDMONT

120 VISTA AVENUE PIEDMONT, CA 94611

PROJECT TEAM:

ARCHITECT:
ELS ARCHITECTURE AND URBAN DESIGN
2040 Addison Street
Berkeley, CA 94704
P: 510.549.2929

CIVIL ENGINEER:
BKF ENGINEERS
4670 Willow Road, Suite 250
Pleasanton, CA 94588
P: (925) 396-7704

LANDSCAPE ARCHITECT:
SWA
2200 Bridgeway
Sausalito, CA 94965
P: 415.332.5100

STRUCTURAL ENGINEER:
FORELL/ELSESSER ENGINEERS, INC.
160 Pine Street, 6th Floor
San Francisco, CA 94111
P: 415.837.0700

MEP / FIRE PROTECTION:
GUTTMANN & BLAEVOET
1620 Montgomery Street, Suite 230
San Francisco, CA 94111
P: 415.655.4000

AQUATICS:
AQUATICS DESIGN GROUP
2226 Faraday Avenue
Carlsbad, CA 92008
P: 760.438.8400

SPECIFICATIONS
TOPFLIGHT SPECS
49 Geary Street, Suite 230
San Francisco, CA 94108-5748
P: 415.546.6033

REVISION

NUMBER	DATE	DESCRIPTION

ISSUE:
100% DESIGN DEVELOPMENT

DATE:
APRIL 30, 2022

STAMP:

NOT FOR CONSTRUCTION

SHEET TITLE:
SYMBOLS, ABBREVIATIONS, GENERAL NOTES AND DRAWING LIST

SHEET NUMBER:
T001

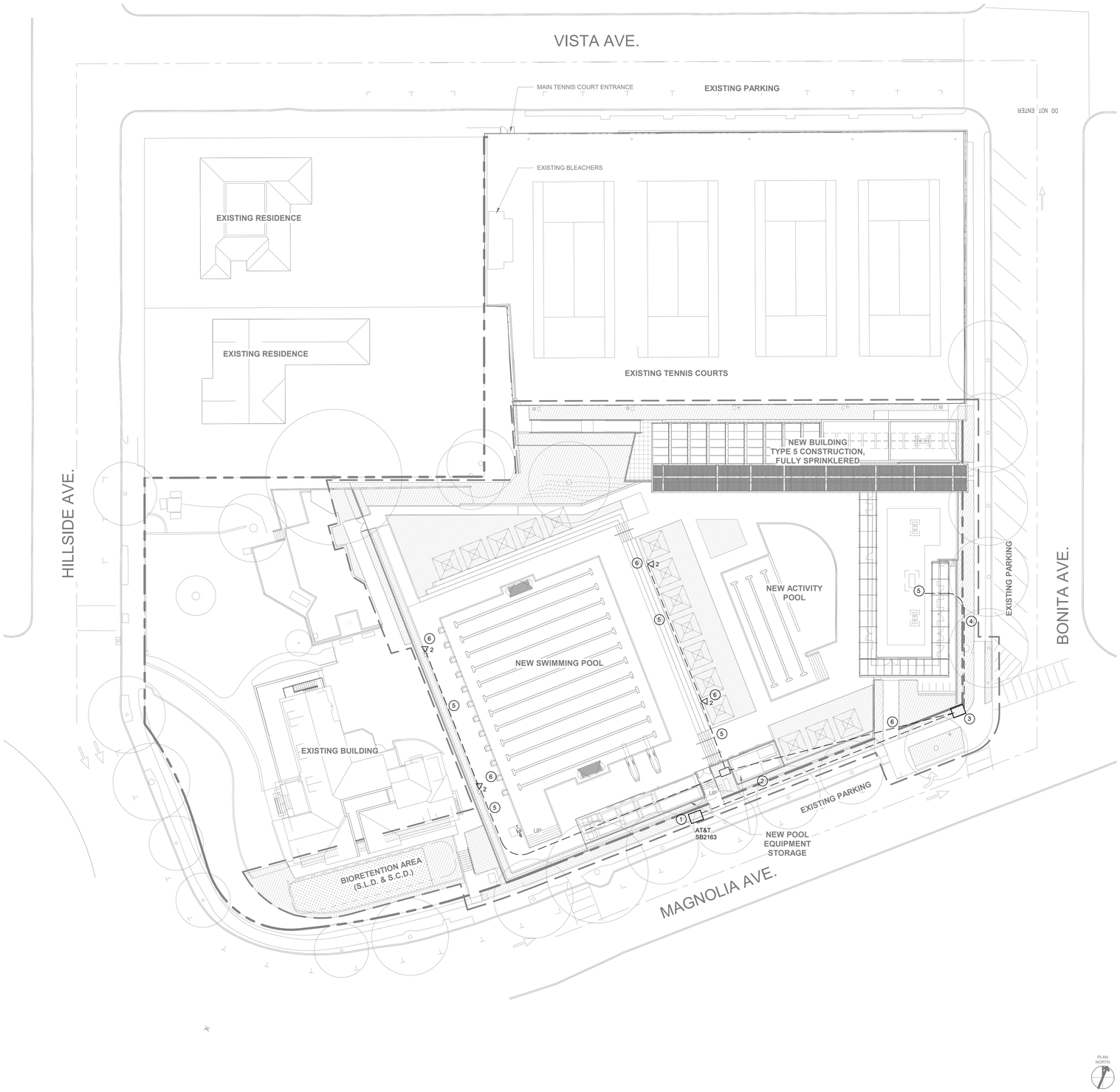

1 SITE PLAN - TELECOM
1" = 20'-0"

GENERAL NOTES

SHEET NOTES

1. APROXIAMTE LOCATION FOR AT&T GROUND BOX CONNECT TO EXISTING BOX WITH NEW CONDUIT
2. NEW 3" CONDUIT FROM EXISTING GROUND BOX TO TELECOM BACKBOARD
3. NEW GROUND / PULL BOX SECTION FOR TELECOM
4. NEW 2" AND 3" CONDUIT TO TELECOM BACK BOARD LOCATION
5. NEW 1 1/2" CONDUITS UNDERGROUND FOR WIFI AND AUDIO VISUAL CABLING TO POLES
6. TYPICAL DATA OUTLETS FOR WI-FI AND CCTV CAMERAS AT POLES

LEGEND

els architecture+ urban design
2040 Addison St, Berkeley, CA 94704
510.549.2929 | elsarch.com

PROJECT:

PIEDMONT COMMUNITY POOL

777 MAGNOLIA AVENUE PIEDMONT, CA 94611

CLIENT:

CITY OF PIEDMONT

120 VISTA AVENUE PIEDMONT, CA 94611

PROJECT TEAM:

ARCHITECT:
ELS ARCHITECTURE AND URBAN DESIGN
2040 Addison Street
Berkeley, CA 94704
P: 510.549.2929

CIVIL ENGINEER:
BKF ENGINEERS
4670 Willow Road, Suite 250
Pleasanton, CA 94588
P: (925) 396-7704

LANDSCAPE ARCHITECT:
SWA
2200 Bridgeway
Sausalito, CA 94965
P: 415.332.5100

STRUCTURAL ENGINEER:
FORELL/ELSESSER ENGINEERS, INC.
160 Pine Street, 6th Floor
San Francisco, CA 94111
P: 415.837.0700

MEP / FIRE PROTECTION:
GUTTMANN & BLAEVOET
1620 Montgomery Street, Suite 230
San Francisco, CA 94111
P: 415.655.4000

AQUATICS:
AQUATICS DESIGN GROUP
2226 Faraday Avenue
Carlsbad, CA 92008
P: 760.438.8400

SPECIFICATIONS
TOPFLIGHT SPECS
49 Geary Street, Suite 230
San Francisco, CA 94108-5748
P: 415.546.6033

REVISION

NUMBER	DATE	DESCRIPTION

ISSUE:
100% DESIGN DEVELOPMENT

DATE:
APRIL 30, 2022

STAMP:

NOT FOR CONSTRUCTION

SHEET TITLE:
SITE PLAN-TELECOM

SHEET NUMBER:
T101

1 FLOOR PLAN - LEVEL 1 - TELECOM
1/8" = 1'-0"

PLAN NORTH

KEYNOTES

1. TYPICAL WALL MOUNTED DATA OUTLETS
2. TYPICAL DATA OUTLET FOR CCTV SECURITY CAMERA
3. TYPICAL DATA OUTLET FOR WIRELESS ACCESS POINT IN CEILING
4. TYPICAL DATA OUTLET FOR CEILING MOUNTED CCTV CAMERA
5. TYPICAL ABOVE COUNTER DATA OUTLET
6. TYPICAL DATA OUTLET FOR ELECTRICAL MSB
7. TYPICAL DATA OUTLET AT FIRE ALARM PANEL
8. TYPICAL DATA OUTLET FOR DIGITAL SIGNAGE
9. TYPICAL FLOOR DATA OUTLETS IN OFFICE
10. TELECOM BACKBOARD ON THIS WALL 8' WIDE 96" TALL
11. TELECOM DATA RACK WITH A/V AND SECURITY EQUIPMENT

GENERAL NOTES

els architecture+ urban design
2040 Addison St, Berkeley, CA 94704
510.549.2929 | elsarch.com

PROJECT:

PIEDMONT COMMUNITY POOL

777 MAGNOLIA AVENUE PIEDMONT, CA 94611

CLIENT:

CITY OF PIEDMONT

120 VISTA AVENUE PIEDMONT, CA 94611

PROJECT TEAM:

ARCHITECT:
ELS ARCHITECTURE AND URBAN DESIGN
2040 Addison Street
Berkeley, CA 94704
P: 510.549.2929

CIVIL ENGINEER:
BKF ENGINEERS
4670 Willow Road, Suite 250
Pleasanton, CA 94588
P: (925) 396-7704

LANDSCAPE ARCHITECT:
SWA
2200 Bridgeway
Sausalito, CA 94965
P: 415.332.5100

STRUCTURAL ENGINEER:
FORELL/ELSESSER ENGINEERS, INC.
160 Pine Street, 6th Floor
San Francisco, CA 94111
P: 415.837.0700

MEP / FIRE PROTECTION:
GUTTMANN & BLAEVOET
1620 Montgomery Street, Suite 230
San Francisco, CA 94111
P: 415.655.4000

AQUATICS:
AQUATICS DESIGN GROUP
2226 Faraday Avenue
Carlsbad, CA 92008
P: 760.438.8400

SPECIFICATIONS
TOPFLIGHT SPECS
49 Geary Street, Suite 230
San Francisco, CA 94108-5748
P: 415.546.6033

REVISION

NUMBER	DATE	DESCRIPTION

ISSUE:
100% DESIGN DEVELOPMENT

DATE:
APRIL 30, 2022

STAMP:

NOT FOR CONSTRUCTION

SHEET TITLE:
FLOOR PLAN - LEVEL 1 TELECOM

SHEET NUMBER:
T201

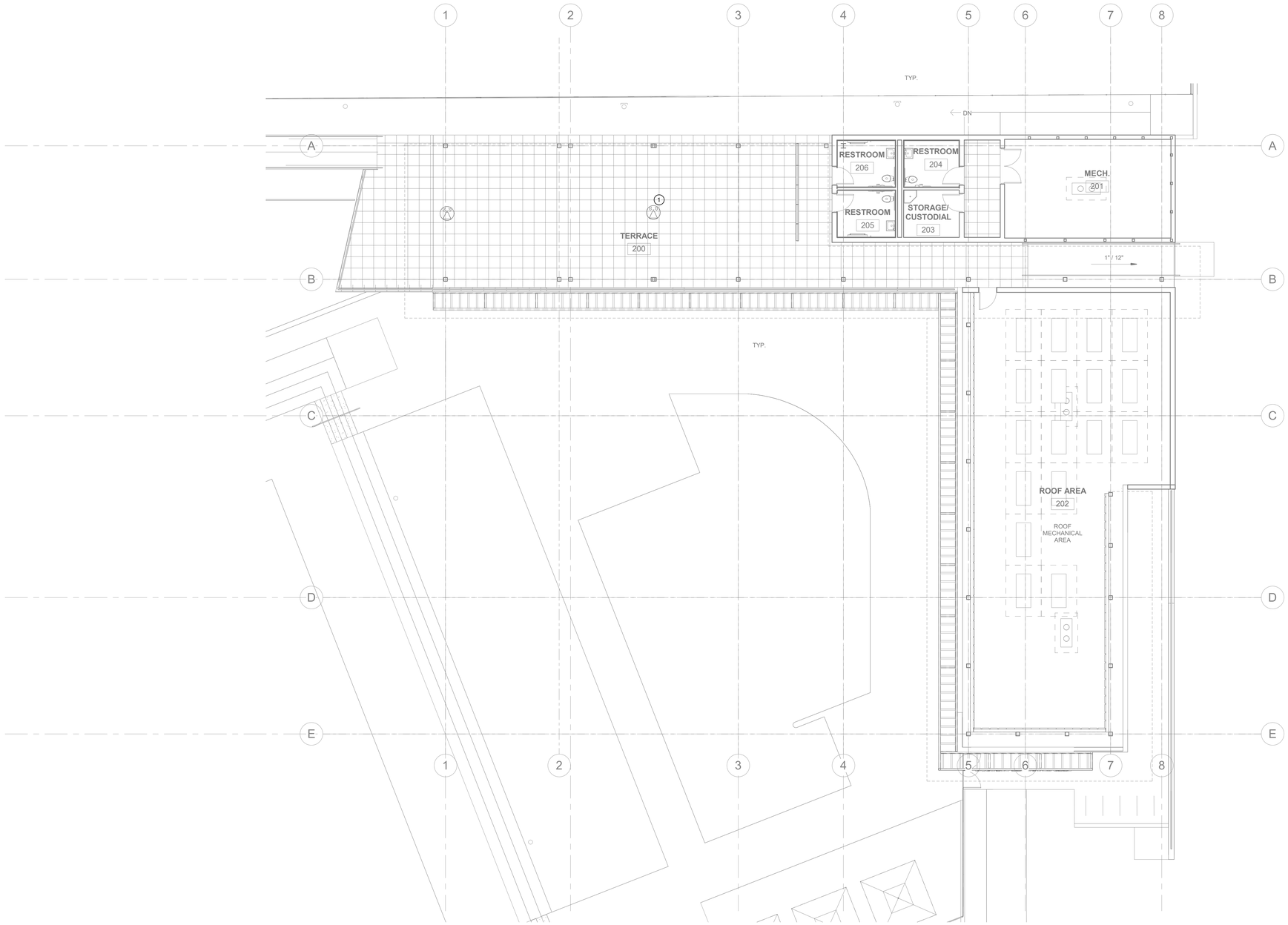

1 HIGH ROOF PLAN - TELECOM
1/8" = 1'-0"

PLAN NORTH

KEYNOTES

1. TYPICAL WIRELESS ACCESS POINT OUTLET AND HOUSING FOR WIRELESS AP BY OTHERS

GENERAL NOTES

els architecture+ urban design
2040 Addison St, Berkeley, CA 94704
510.549.2929 | elsarch.com

PROJECT:

PIEDMONT COMMUNITY POOL

777 MAGNOLIA AVENUE PIEDMONT, CA 94611

CLIENT:

CITY OF PIEDMONT

120 VISTA AVENUE PIEDMONT, CA 94611

PROJECT TEAM:

ARCHITECT:
ELS ARCHITECTURE AND URBAN DESIGN
2040 Addison Street
Berkeley, CA 94704
P: 510.549.2929

CIVIL ENGINEER:
BKF ENGINEERS
4670 Willow Road, Suite 250
Pleasanton, CA 94588
P: (925) 396-7704

LANDSCAPE ARCHITECT:
SWA
2200 Bridgeway
Sausalito, CA 94965
P: 415.332.5100

STRUCTURAL ENGINEER:
FORELL/ELSESSER ENGINEERS, INC.
160 Pine Street, 6th Floor
San Francisco, CA 94111
P: 415.837.0700

MEP / FIRE PROTECTION:
GUTTMANN & BLAEVOET
1620 Montgomery Street, Suite 230
San Francisco, CA 94111
P: 415.655.4000

AQUATICS:
AQUATICS DESIGN GROUP
2226 Faraday Avenue
Carlsbad, CA 92008
P: 760.438.8400

SPECIFICATIONS
TOPFLIGHT SPECS
49 Geary Street, Suite 230
San Francisco, CA 94108-5748
P: 415.546.6033

REVISION

NUMBER	DATE	DESCRIPTION

ISSUE:
100% DESIGN DEVELOPMENT

DATE:
APRIL 30, 2022

STAMP:

NOT FOR CONSTRUCTION

SHEET TITLE:
ROOF PLAN - TELECOM

SHEET NUMBER:
T205

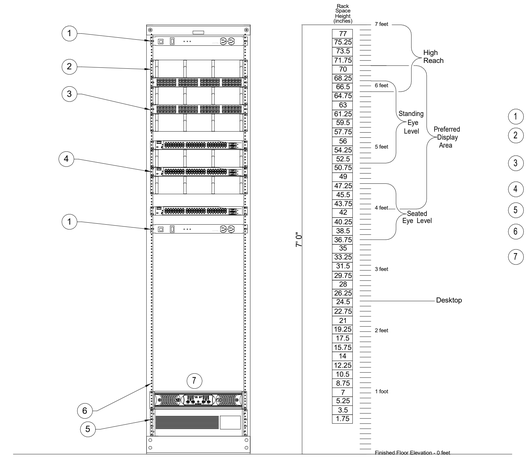

1 - DATA RACK EQUIPMENT ELEVATION

SCALE: NONE

1. RACK POWER PDU
2. TYPICAL 2RU CABLE MANAGER
3. TYPICAL 1 RU HIGH DENSITY PATCH PANEL 48 PORT
4. TYPICAL OFOI 1 RU SWITCH 48 PORT
5. 3 RU UPS OFOI
6. 19" RACK / FRAME / CABINET
7. PAGING EQUIPMENT MOUNTS BELOW DATA CABLING

els architecture+ urban design
2040 Addison St, Berkeley, CA 94704
510.549.2929 | elsarch.com

PROJECT:

PIEDMONT COMMUNITY POOL

777 MAGNOLIA AVENUE PIEDMONT, CA 94611

CLIENT:

CITY OF PIEDMONT

120 VISTA AVENUE PIEDMONT, CA 94611

PROJECT TEAM:

ARCHITECT:
ELS ARCHITECTURE AND URBAN DESIGN
2040 Addison Street
Berkeley, CA 94704
P: 510.549.2929

CIVIL ENGINEER:
BKF ENGINEERS
4670 Willow Road, Suite 250
Pleasanton, CA 94588
P: (925) 396-7704

LANDSCAPE ARCHITECT:
SWA
2200 Bridgeway
Sausalito, CA 94965
P: 415.332.5100

STRUCTURAL ENGINEER:
FORELL/ELSESSER ENGINEERS, INC.
160 Pine Street, 6th Floor
San Francisco, CA 94111
P: 415.837.0700

MEP / FIRE PROTECTION:
GUTTMANN & BLAEVOET
1620 Montgomery Street, Suite 230
San Francisco, CA 94111
P: 415.655.4000

AQUATICS:
AQUATICS DESIGN GROUP
2226 Faraday Avenue
Carlsbad, CA 92008
P: 760.438.8400

SPECIFICATIONS
TOPFLIGHT SPECS
49 Geary Street, Suite 230
San Francisco, CA 94108-5748
P: 415.546.6033

REVISION

NUMBER	DATE	DESCRIPTION

ISSUE:
100% DESIGN DEVELOPMENT

DATE:
APRIL 30, 2022

STAMP:

NOT FOR CONSTRUCTION

SHEET TITLE:

TELECOM BLOCK RISER DIAGRAMS

SHEET NUMBER:

T501

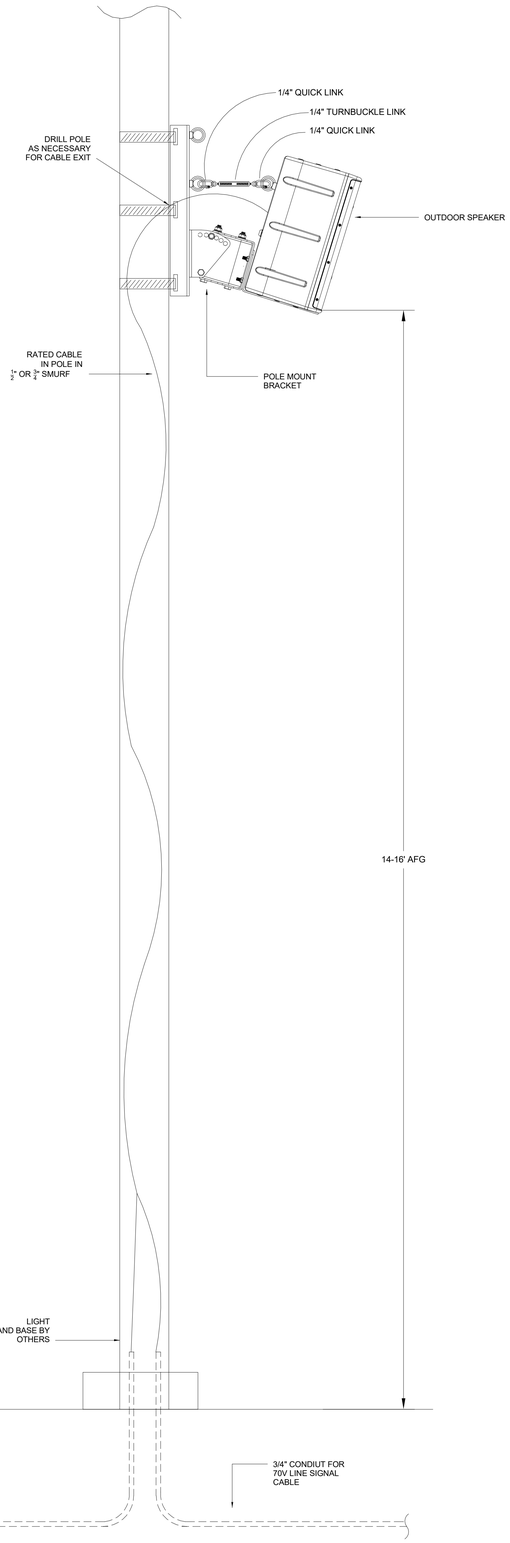

8 TYPICAL POLE MOUNTED OUTDOOR SPEAKER DETAIL
SCALE: NONE

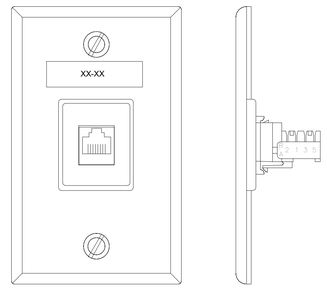

5 TYPICAL WALL PHONE OUTLET - NEW
SCALE: NONE

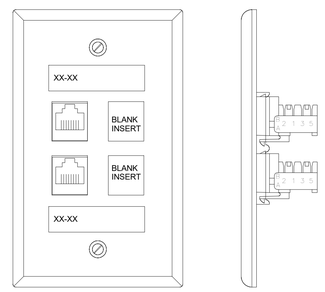

6 TYPICAL 2 PORT DATA OUTLET - NEW
SCALE: NONE

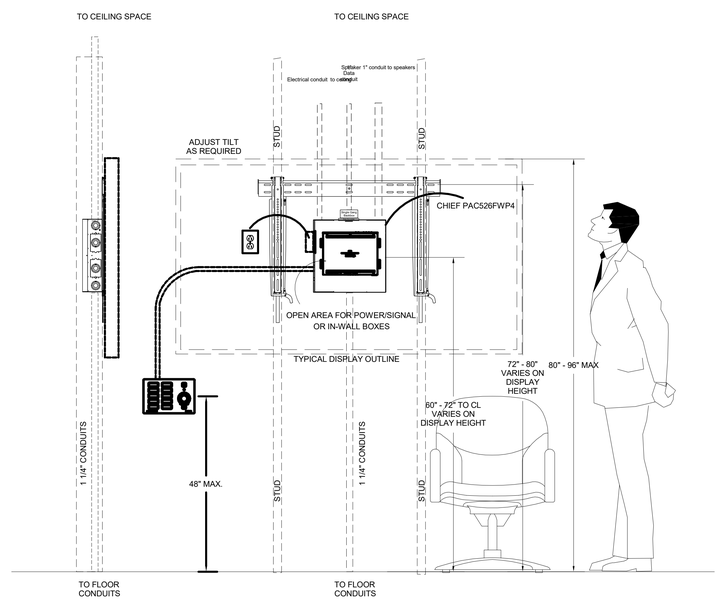

7 WALL DISPLAY TYPICAL MOUNTING AND CONNECTION DETAIL
SCALE: NONE

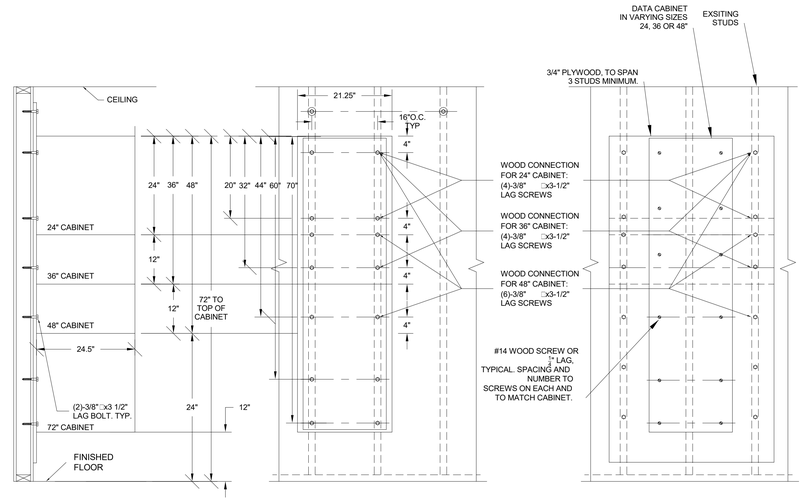

1 WALL RACK MOUNTING FOR STUD WALL - TYPICAL
SCALE: NONE

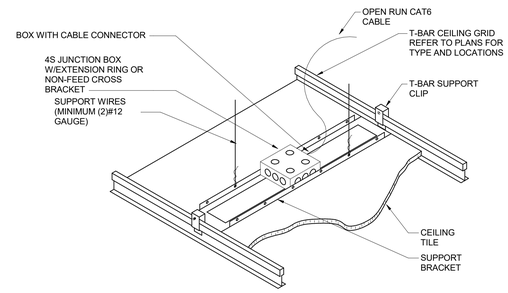

2 CEILING OUTLET SUPPORT/MOUNTING DETAIL
SCALE: NONE

3 NOT USED
SCALE: NONE

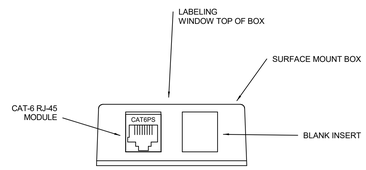

4 DATA OUTLET AT WAP
SCALE: NONE

els architecture+ urban design
2040 Addison St, Berkeley, CA 94704
510.549.2929 | elsarch.com

PROJECT:

PIEDMONT COMMUNITY POOL

777 MAGNOLIA AVENUE PIEDMONT, CA 94611

CLIENT:

CITY OF PIEDMONT

120 VISTA AVENUE PIEDMONT, CA 94611

PROJECT TEAM:

ARCHITECT:
ELS ARCHITECTURE AND URBAN DESIGN
2040 Addison Street
Berkeley, CA 94704
P: 510.549.2929

CIVIL ENGINEER:
BKF ENGINEERS
4670 Willow Road, Suite 250
Pleasanton, CA 94588
P: (925) 396-7704

LANDSCAPE ARCHITECT:
SWA
2200 Bridgeway
Sausalito, CA 94965
P: 415.332.5100

STRUCTURAL ENGINEER:
FORELL/ELSESSER ENGINEERS, INC.
160 Pine Street, 6th Floor
San Francisco, CA 94111
P: 415.837.0700

MEP / FIRE PROTECTION:
GUTTMANN & BLAEVOET
1620 Montgomery Street, Suite 230
San Francisco, CA 94111
P: 415.655.4000

AQUATICS:
AQUATICS DESIGN GROUP
2226 Faraday Avenue
Carlsbad, CA 92008
P: 760.438.8400

SPECIFICATIONS
TOPFLIGHT SPECS
49 Geary Street, Suite 230
San Francisco, CA 94108-5748
P: 415.546.6033

REVISION

NUMBER	DATE	DESCRIPTION

ISSUE:
100% DESIGN DEVELOPMENT

DATE:
APRIL 30, 2022

STAMP:

NOT FOR CONSTRUCTION

SHEET TITLE:
TELECOM DETAILS

SHEET NUMBER:
T701

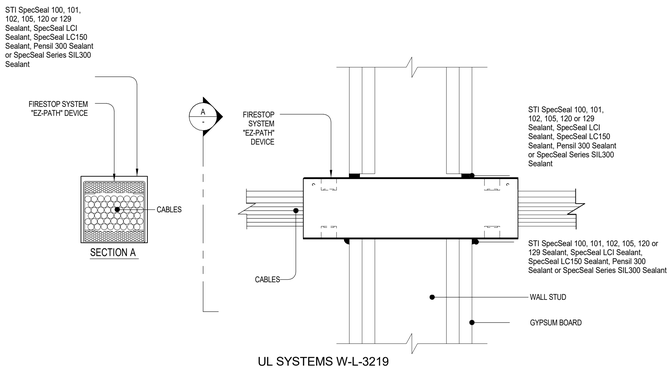

UL SYSTEMS W-L-3219

T = 3/4 OR 1 HR

F = 1 OR 2 HR

CONSULT CURRENT UNDERWRITERS LABORATORIES "FIRE RESISTANCE DIRECTORY" FOR DETAILS

5 - FIRESTOP FRAMED GYPSUM WALLS "EZ-PATH"

SCALE: NONE

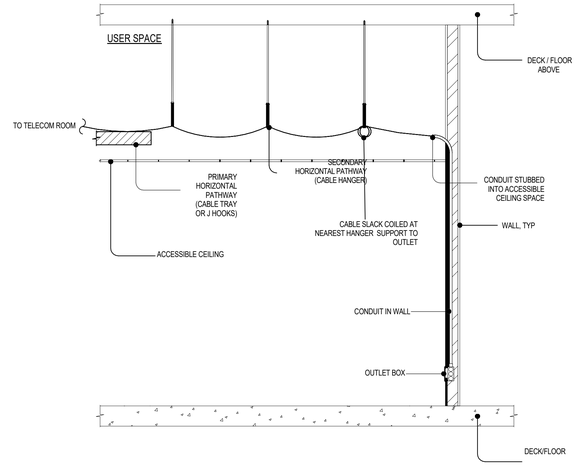

4 - HORIZONTAL CABLE ROUTING DIAGRAM

SCALE: NONE

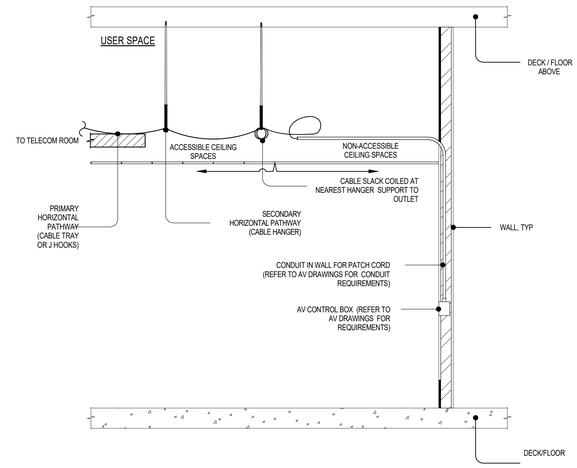

1 - HORIZONTAL CABLE ROUTING DIAGRAM

SCALE: NONE

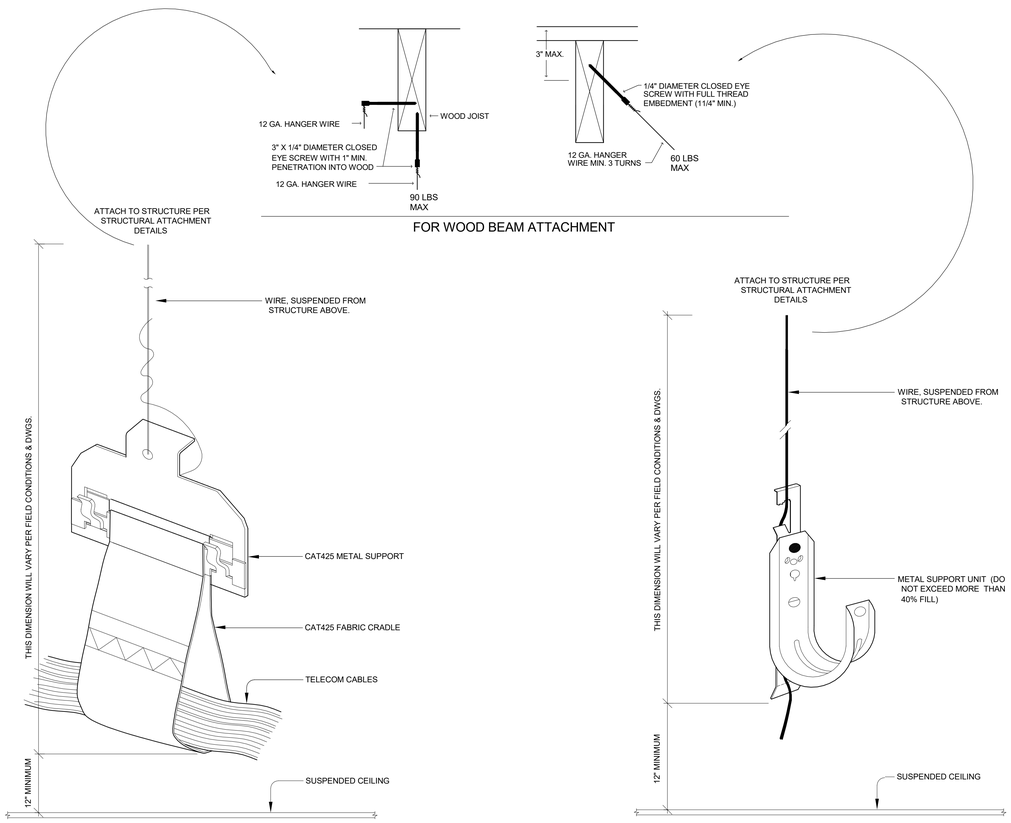

NOTE:
1. SPACE CABLE HANGERS A MAXIMUM 5'-0" ON CENTER WITHIN LAYOUT SHOWN ON FLOOR PLANS.
2. SECURE CABLE HANGER TO DECK, JOIST, BEAM, ETC. TO MEET LOCAL AND STATE SEISMIC CODES.
3. REFER TO STRUCTURAL DRAWINGS FOR DECK OR STRUCTURE TYPE. SHOWN HERE FOR CLARITY ONLY.
4. REFER TO ARCHITECTURAL DRAWINGS FOR SUSPENDED CEILING TYPE. SHOWN HERE FOR CLARITY ONLY.

NOTE:
1. SPACE CABLE HANGERS A MAXIMUM 5'-0" ON CENTER WITHIN LAYOUT SHOWN ON FLOOR PLANS.
2. SECURE CABLE HANGER TO DECK, JOIST, BEAM, ETC. TO MEET LOCAL AND STATE SEISMIC CODES.
3. REFER TO STRUCTURAL DRAWINGS FOR DECK OR STRUCTURE TYPE. SHOWN HERE FOR CLARITY ONLY.
4. REFER TO ARCHITECTURAL DRAWINGS FOR SUSPENDED CEILING TYPE. SHOWN HERE FOR CLARITY ONLY.

6 - NEW CABLE SADDLES AND J-HOOKS AND TELECOM CABLING SUPPORTS

SCALE: NONE

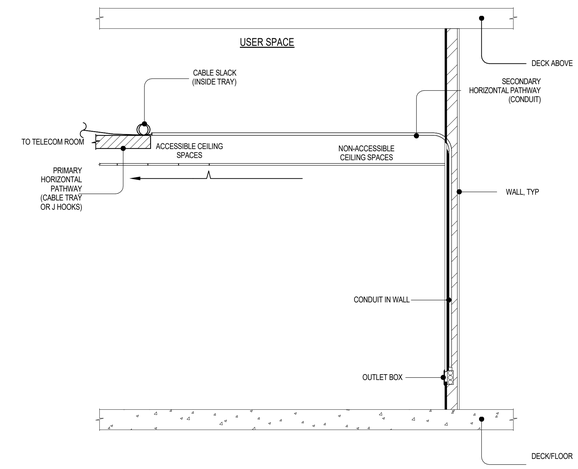

2 - HORIZONTAL CABLE ROUTING DIAGRAM (NON-ACCESSIBLE CEILING)

SCALE: NONE

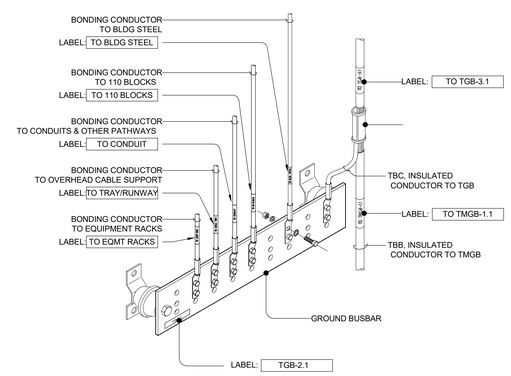

NOTES: REFER TO ROOM PLANS FOR BUSBAR MOUNTING LOCATION. REFER TO GROUNDING RISER DIAGRAM FOR LIST OF EQUIPMENT REQUIRING GROUNDING.
ITEMS SHOWN HERE ARE AN EXAMPLE.

3 - TGB BONDING AND LABELING

SCALE: NONE

els architecture+ urban design
2040 Addison St, Berkeley, CA 94704
510.549.2929 | elsarch.com

PROJECT:

PIEDMONT COMMUNITY POOL

777 MAGNOLIA AVENUE PIEDMONT, CA 94611

CLIENT:

CITY OF PIEDMONT

120 VISTA AVENUE PIEDMONT, CA 94611

PROJECT TEAM:

ARCHITECT:
ELS ARCHITECTURE AND URBAN DESIGN
2040 Addison Street
Berkeley, CA 94704
P: 510.549.2929

CIVIL ENGINEER:
BKF ENGINEERS
4670 Willow Road, Suite 250
Pleasanton, CA 94588
P: (925) 396-7704

LANDSCAPE ARCHITECT:
SWA
2200 Bridgeway
Sausalito, CA 94965
P: 415.332.5100

STRUCTURAL ENGINEER:
FORELL/ELSESSER ENGINEERS, INC.
160 Pine Street, 6th Floor
San Francisco, CA 94111
P: 415.837.0700

MEP / FIRE PROTECTION:
GUTTMANN & BLAEVOET
1620 Montgomery Street, Suite 230
San Francisco, CA 94111
P: 415.655.4000

AQUATICS:
AQUATICS DESIGN GROUP
2226 Faraday Avenue
Carlsbad, CA 92008
P: 760.438.8400

SPECIFICATIONS
TOPFLIGHT SPECS
49 Geary Street, Suite 230
San Francisco, CA 94108-5748
P: 415.546.6033

REVISION

NUMBER	DATE	DESCRIPTION

ISSUE:
100% DESIGN DEVELOPMENT

DATE:
APRIL 30, 2022

STAMP:

NOT FOR CONSTRUCTION

SHEET TITLE:

TELECOM DETAILS

SHEET NUMBER:

T702

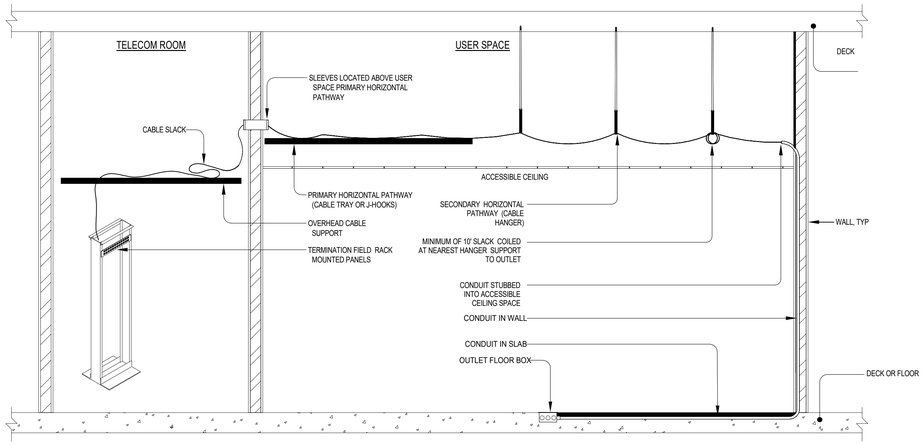

NOTE: EXCEEDING (2) 90 DEGREE CONDUIT BENDS IS NOT ALLOWED. IF (3) 90 DEGREE BENDS ARE REQUIRED INCREASE CONDUIT SIZE TO NEXT TRADE SIZE.

4 FLOOR BOX STATION CABLING ROUTING DIAGRAM (ACCESSIBLE CEILING)
SCALE: NONE

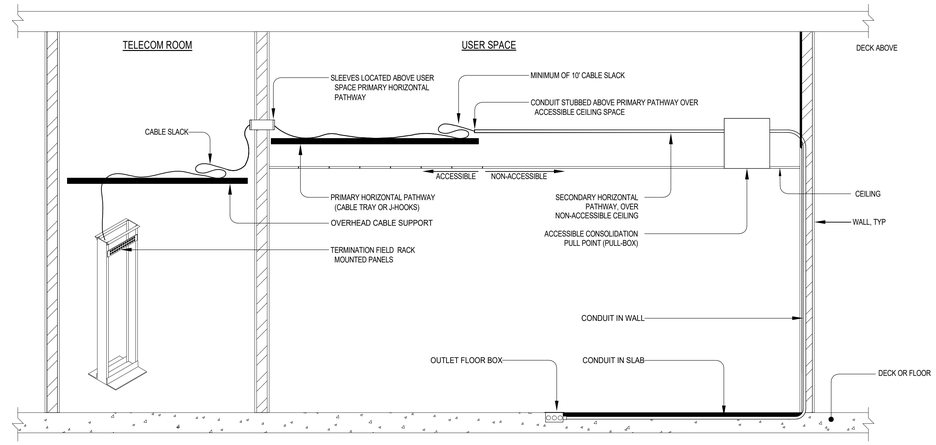

NOTE: EXCEEDING (2) 90 DEGREE CONDUIT BENDS IS NOT ALLOWED. IF (3) 90 DEGREE BENDS ARE REQUIRED INCREASE CONDUIT SIZE TO NEXT TRADE SIZE.

1 FLOOR BOX STATION CABLING ROUTING DIAGRAM
SCALE: NONE

1. ELECTRICAL MAIN BUILDING GROUND REFERENCE BUSBAR (MBGRB). SEE ELECTRICAL DRAWINGS FOR MBGRB LOCATION.
2. PROVIDE INSULATED GROUND CONDUCTOR AS BCT, IN 1-1/4" EMT CONDUIT FROM MBGRB TO TMGB-MPOE
3. PROVIDE "TMGB"-TYPE GROUNDING BUSBAR. REFER TO ROOM PLAN FOR INSTALLATION REQUIREMENTS.
4. PROVIDE "TGB"-TYPE GROUNDING BUSBAR. REFER TO ROOM PLANS FOR INSTALLATION REQUIREMENTS.
5. PROVIDE TBC FROM TMGB/TGB TO NEAREST BUILDING STEEL.
6. PROVIDE TBC FROM TMGB/TGB TO CONDUITS. CONDUITS MAY BE BONDED IN SERIES WITH 'LAST' CONDUIT BONDED TO TMGB/TGB. USE ONLY ONE GROUNDING LUG PER CONDUIT.
7. PROVIDE INSULATED GROUND CONDUCTOR FROM TMGB TO TGB. PROVIDE DEDICATED CONDUIT PATH FOR CONDUCTORS.
8. PROVIDE EXOTHERMIC WELD CONNECTING THE TBC TO THE TBB.
9. PROVIDE TBC FROM THE TBB TO TGB.
10. PROVIDE TBC FROM TMGB/TGB TO 110-BLOCK FRAMES. (BLOCK FRAMES AND WIRE MANANERS MAY BE BONDED IN SERIES WITH 'LAST' MANAGER BONDED TO TMGB/TGB.)
11. PROVIDE TBC FROM TMGB/TGB TO EQUIPMENT RACK BAYS. (RACKS MAY BE BONDED IN SERIES WITH 'LAST' RACK BONDED TO TMGB/TGB.)
12. PROVIDE TBC FROM TMGB/TGB TO OVERHEAD CABLE TRAY.
13. PROVIDE TBC FROM TMGB/TGB TO FIBER-OPTIC BACKBONE CABLE.

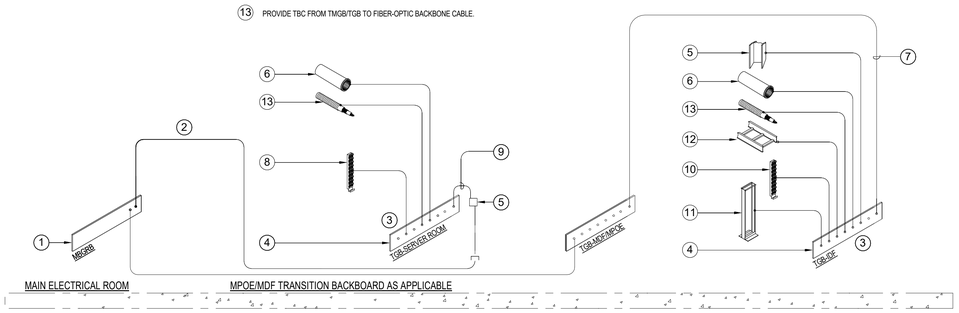

5 TELECOM GROUNDING RISER
SCALE: NOINE

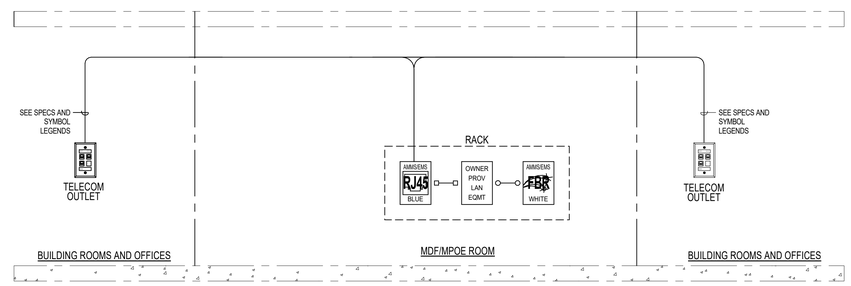

2 COPPER NETWORK RISER DIAGRAM
SCALE: NONE

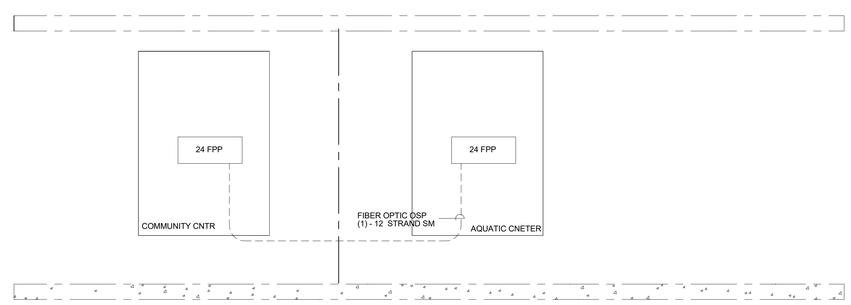

3 FIBER NETWORK RISER DIAGRAM
SCALE: NONE

els architecture+ urban design
2040 Addison St, Berkeley, CA 94704
510.549.2929 | elsarch.com

PROJECT:

PIEDMONT COMMUNITY POOL

777 MAGNOLIA AVENUE PIEDMONT, CA 94611

CLIENT:

CITY OF PIEDMONT

120 VISTA AVENUE PIEDMONT, CA 94611

PROJECT TEAM:

ARCHITECT:
ELS ARCHITECTURE AND URBAN DESIGN
2040 Addison Street
Berkeley, CA 94704
P: 510.549.2929

CIVIL ENGINEER:
BKF ENGINEERS
4670 Willow Road, Suite 250
Pleasanton, CA 94588
P: (925) 396-7704

LANDSCAPE ARCHITECT:
SWA
2200 Bridgeway
Sausalito, CA 94965
P: 415.332.5100

STRUCTURAL ENGINEER:
FORELL/ELSESSER ENGINEERS, INC.
160 Pine Street, 6th Floor
San Francisco, CA 94111
P: 415.837.0700

MEP / FIRE PROTECTION:
GUTTMANN & BLAEVOET
1620 Montgomery Street, Suite 230
San Francisco, CA 94111
P: 415.655.4000

AQUATICS:
AQUATICS DESIGN GROUP
2226 Faraday Avenue
Carlsbad, CA 92008
P: 760.438.8400

SPECIFICATIONS
TOPFLIGHT SPECS
49 Geary Street, Suite 230
San Francisco, CA 94108-5748
P: 415.546.6033

REVISION

NUMBER	DATE	DESCRIPTION

ISSUE:
100% DESIGN DEVELOPMENT

DATE:
APRIL 30, 2022

STAMP:

NOT FOR CONSTRUCTION

SHEET TITLE:
TELECOM DETAILS

SHEET NUMBER:
T703

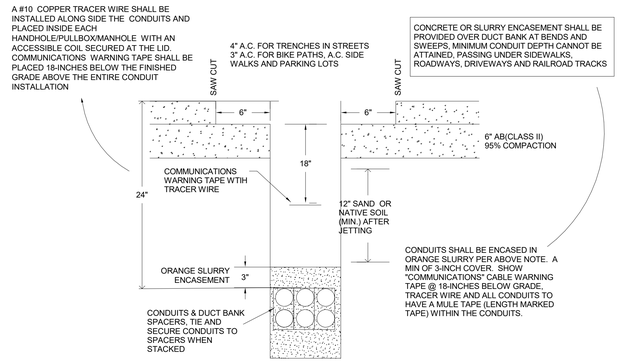

1 TRENCH CROSS-SECTION FOR PAVED AREAS

NO SCALE

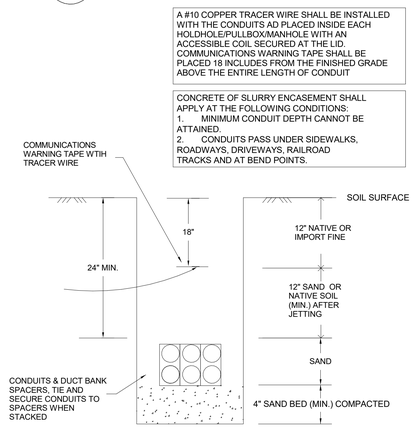

2 TRENCH CROSS-SECTION FOR NON-PAVED AREAS

NO SCALE

NO. 3660 ADJUSTABLE FRAME AND COVER ASSEMBLY AVAILABLE IN PEDESTRIAN OR INCIDENTAL TRAFFIC RATING

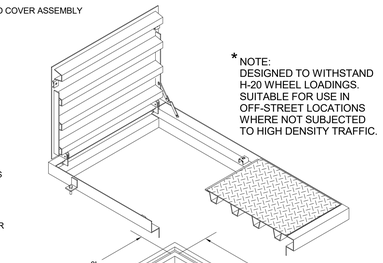

* NOTE:
DESIGNED TO WITHSTAND H-20 WHEEL LOADINGS. SUITABLE FOR USE IN OFF-STREET LOCATIONS WHERE NOT SUBJECTED TO HIGH DENSITY TRAFFIC.

COVER INCLUDES:

* HEIGHT ADJUSTMENT BRACKETS
* TORSION ASSIT OPENING
* GUARD BARS
* "PACIFIC BELL" NAMEPLATE
* SLIP RESISTANT COVERS (GALVANIZED STEEL OR POLYMER COVERS ALSO AVAILABLE)

VAULT INCLUDES:

* 7/8" DIA. PULL IRONS (4EA.)
* 12" DIA. X 2" SUMP (1EA.)
* 1/2" DIA. PLASTIC INSERTS (16EA.)
* TERM-A-DUCTS PER CURRENT PACIFIC BELL SPECIFICATIONS
* RACKING PACKAGE PER CURRENT PACIFIC BELL SPECIFICATIONS

VAULT WEIGHT
3,810 LBS.

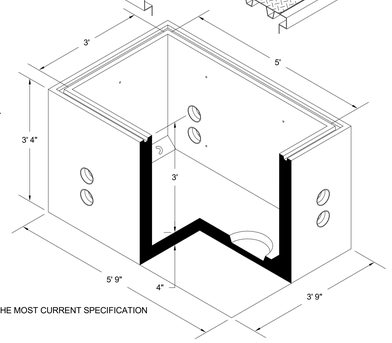

DRAWING MAY NOT CONFORM TO THE MOST CURRENT SPECIFICATION

3'-0" x 5'-0" x 3'-0" I.D.
AT&T / Pacific Bell

3 JENSEN PRECAST VAULT 3660

NO SCALE

els architecture+ urban design
2040 Addison St, Berkeley, CA 94704
510.549.2929 | elsarch.com

PROJECT:

PIEDMONT COMMUNITY POOL

777 MAGNOLIA AVENUE PIEDMONT, CA 94611

CLIENT:

CITY OF PIEDMONT

120 VISTA AVENUE PIEDMONT, CA 94611

PROJECT TEAM:

ARCHITECT:
ELS ARCHITECTURE AND URBAN DESIGN
2040 Addison Street
Berkeley, CA 94704
P: 510.549.2929

CIVIL ENGINEER:
BKF ENGINEERS
4670 Willow Road, Suite 250
Pleasanton, CA 94588
P: (925) 396-7704

LANDSCAPE ARCHITECT:
SWA
2200 Bridgeway
Sausalito, CA 94965
P: 415.332.5100

STRUCTURAL ENGINEER:
FORELL/ELSESSER ENGINEERS, INC.
160 Pine Street, 6th Floor
San Francisco, CA 94111
P: 415.837.0700

MEP / FIRE PROTECTION:
GUTTMANN & BLAEVOET
1620 Montgomery Street, Suite 230
San Francisco, CA 94111
P: 415.655.4000

AQUATICS:
AQUATICS DESIGN GROUP
2226 Faraday Avenue
Carlsbad, CA 92008
P: 760.438.8400

SPECIFICATIONS
TOPFLIGHT SPECS
49 Geary Street, Suite 230
San Francisco, CA 94108-5748
P: 415.546.6033

REVISION

NUMBER	DATE	DESCRIPTION

ISSUE:
100% DESIGN DEVELOPMENT

DATE:
APRIL 30, 2022

STAMP:

NOT FOR CONSTRUCTION

SHEET TITLE:

TELECOM DETAILS

SHEET NUMBER:

T704

GENERAL NOTES - AUDIO VISUAL

1. THE PURPOSE OF THIS SHEET IS TO ILLUSTRATE AND DEFINE TYPICAL SYMBOLS, AND SYSTEMS OF SYMBOLS, WHICH MAY OCCUR ON THE AUDIO VISUAL DRAWINGS. THE ILLUSTRATION OF A SYMBOL, OR SYSTEM OF SYMBOLS, ON THIS SHEET DOES NOT NECESSARILY INDICATE THAT THE BUILDING ITEM OF THE DESCRIBED SYSTEM BY THE SYMBOL IS USED AS PART OF THIS PROJECT. REFER TO THE PLANS, ELEVATIONS, SECTIONS, SCHEDULES, DETAILS, AND SPECIFICATIONS TO DETERMINE THE SCOPE OF THE WORK.
2. THE WORK - INCLUDING MATERIALS, METHODS, ASSEMBLIES, ETC - SHALL COMPLY WITH THE MINIMUM REQUIREMENTS OF THE GOVERNING LAWS, ORDINANCES, AND REGULATIONS OF ALL FEDERAL, STATE, AND LOCAL AUTHORITIES HAVING JURISDICTION OVER THE PROJECT, AS WELL AS THOSE GREATER REQUIREMENTS INDICATED BY THE CONTRACT DOCUMENTS. NO PART OF THE CONTRACT DOCUMENTS MAY BE CONSTRUED TO REQUIRE OR PERMIT WORK CONTRARY TO A GOVERNING LAW, ORDINANCE, OR REGULATION.
3. THE AUDIO VISUAL DRAWINGS ARE PART OF THE OVERALL PROJECT DRAWINGS WHICH, WHEN COMPLETE, CONSISTS OF DRAWINGS LISTED BY THE "INDEX OF DRAWINGS". THE WORK DESCRIBED BY THE DRAWINGS OF ANY ONE DISCIPLINE MAY BE AFFECTED BY THE WORK AND REQUIREMENTS DESCRIBED ON DRAWINGS OF ANOTHER DISCIPLINE AND MAY REQUIRE REFERENCE TO THE DRAWINGS OF ANOTHER DISCIPLINE. PARTIAL SETS OF DRAWINGS ARE INCOMPLETE AND SHOULD NOT BE DISTRIBUTED OR UTILIZED BY THE CONTRACTOR. MANAGE, SUPERVISE, REVIEW, AND COORDINATE THE WORK OF SUB-CONTRACTORS, TRADES, AND SUPPLIERS WITH THE REQUIREMENTS OF THE CONTRACT DOCUMENTS BEFORE COMMENCING CONSTRUCTION AND TO ASSURE THAT PARTIES ARE AWARE OF REQUIREMENTS, REGARDLESS OF WHERE THE REQUIREMENTS OCCUR IN THE CONTRACT DOCUMENTS, WHICH MAY AFFECT THE WORK OF THAT PARTY.
4. THE ARCHITECTURAL DRAWINGS ESTABLISH AND COORDINATE THE FINISHED APPEARANCE AND EXACT LOCATION OF EXPOSED ELEMENTS OF THE WORK OF TRADES, INCLUDING THAT WORK THAT IS ILLUSTRATED PRIMARILY ON THESE DRAWINGS. LOCATIONS SHOWN ON THESE DRAWINGS ARE DIAGRAMMATIC. REFER TO ARCHITECTURAL DRAWINGS FOR DIMENSIONED LOCATIONS.
5. MAINTAIN A COPY OF THE SPECIFICATIONS AND DRAWINGS AT THE JOB SITE. PRESENT THE SPECIFICATIONS AND DRAWINGS UPON REQUEST. MAINTAIN DAILY MARKUPS OF ACTUAL INSTALLATION AND PRESENT FOR REVIEW UPON REQUEST.
6. REFER TO WRITTEN SPECIFICATIONS FOR PROJECT SCOPE, GENERAL REQUIREMENTS, PRODUCT SPECIFICATIONS, AND INSTALLATION REQUIREMENTS. WHERE QUANTITY AND QUALITY DIFFER, THE HIGHER OF EACH SHALL PREVAIL.
7. PROVIDE NECESSARY EQUIPMENT AND ACCESSORIES FOR A FULLY FUNCTIONAL SYSTEM THAT MEETS INTENDED DESIGN WHETHER EXPRESSLY SPECIFIED OR NOT AND ALL INCIDENTALS PERTAINING TO THE INSTALLATION TO FORM A COMPLETE AND WORKING SYSTEM.
8. PROVIDE MATERIALS AND EQUIPMENT LISTED BY UNDERWRITERS LABORATORIES FOR THE PURPOSE USED AND BEARING THEIR LABEL.
9. PRIOR TO PERFORMING WORK, IMMEDIATELY NOTIFY THE OWNER, OR OWNER'S REPRESENTATIVE, IN WRITING OF OBSERVATIONS OR CONDITIONS DISCOVERED THAT WOULD PREVENT INSTALLATION ACCORDING TO DRAWINGS AND SPECIFICATIONS.
10. CONTRACTOR SHALL UPDATED A MARKED UP PLANS TO WEEKLY CONSTRUCTION MEETINGS FOR OWNER'S, OR OWNER'S REPRESENTATIVE'S, APPROVAL PRIOR TO PRODUCTION OF AS-BUILT DRAWINGS FOR RECORD DOCUMENTATION.
11. REMOVE ABANDONED CABLING LEFT OVER CONDUIT, WIRE, SCRAPS, ETC. LEAVE PREMISES CLEAN AND FREE OF TRASH OR DEBRIS RESULTING FROM WORK. AND PROPERLY RECYCLE APPLICABLE MATERIAL ACCORDING TO ALL CODE REQUIREMENTS FOR SUCH MATERIAL.
12. INSTALL EQUIPMENT, DEVICES, AND PATHWAYS, SUCH AS CABLE TRAY, RUNWAY, CONDUITS, CABLE HANGERS, AND PULLBOXES, ETC., ACCORDING TO STATE AND LOCAL CODES AND REGULATORY REQUIREMENTS FOR SEISMIC BRACING.
13. CONDUIT ROUTING, WHERE SHOWN ON DRAWINGS, IS DIAGRAMMATIC IN NATURE. FIELD DETERMINE CONDUIT ROUTES TO SUIT FIELD CONDITIONS WHILE CONFORMING TO SPECIFICATIONS. PREPARE SHOP DRAWINGS SHOWING EXACT CONDUIT ROUTES, INDICATING PENETRATION TYPES (e.g., FRAMED WALL, CONCRETE WALL, ETC.). COORDINATE REQUIREMENTS WITH OTHER TRADES.
14. INSTALL CONDUIT PATHWAYS PER TIA/EIA-568-B AND BICSI TDMM AND BEST INDUSTRY STANDARDS AND PRACTICES.
15. ROUTE CONDUIT, CABLE TRAYS, J-HOOKS AND OTHER PATHWAYS PERPENDICULAR OR PARALLEL TO BUILDING LINES, IN GENERAL. CABLING INSTALLED AT ANGLES AND SKEWED ABOVE CEILINGS WILL NOT BE ALLOWED.
16. CONDUITS WITH LESS THEN 2" INSIDE DIAMETER WILL HAVE A BEND RADIUS OF NO LESS THAN 6 TIMES THE INSIDE DIAMETER. CONDUITS WITH A 2" OR GREATER INSIDE DIAMETER WILL HAVE A BEND RADIUS OF NO LESS THAN 10 TIMES THE INSIDE DIAMETER.
17. CONDUIT RUNS SHALL NOT EXCEED 180 DEGREES OR TWO 90-DEGREE BENDS WITHOUT AN APPROPRIATE NEMA RATED PULL BOX OR/AND INCREASE CONDUIT BY ONE TRADE SIZE FOR EACH ADDITIONAL BEND OF UP TO 90 DEGREES, UNLESS LAST BEND IS WITHIN 12 INCHES OF THE CONDUIT END.
18. WHEN ROUTING CONDUIT IN CONCRETE SLABS, ETC., MAINTAIN A GRADUATED BEND RADIUS TO MAINTAIN CONDUIT CAPACITY. THE USE OF 90-DEGREE 'ELBOW' FITTINGS IS EXPRESSLY PROHIBITED UNLESS PRIOR AUTHORIZATION IS RECEIVED FROM OWNER, OR OWNER'S REPRESENTATIVE, IN WRITING.
19. PROPERLY FIRE SEAL CONDUIT AND RACEWAY PENETRATIONS THROUGH FIRE RATED WALLS AND FLOORS TO MAINTAIN THE FIRE SEPARATION RATING. PROVIDE FIRE SEALING ASSEMBLIES THAT ARE UL LISTED FOR THE APPLICATION. COORDINATE REQUIREMENTS WITH LOCAL FIRE MARSHALL PRIOR TO INSTALLATION. DO NOT MIX PRODUCTS BETWEEN MANUFACTURED ASSEMBLIES.
20. PROVIDE EXPANSION/DEFLECTION FITTINGS FOR CONDUITS AT STRUCTURAL EXPANSION JOINT CROSSINGS.
21. PROVIDE PLASTIC BUSHINGS ON EXPOSED ENDS OF CONDUIT AND SLEEVES, WHETHER VISIBLE OR NOT.
22. PROVIDE EMT 4" TRADE SIZE CONDUITS FOR BACKBONE PATHWAYS WITH 40" MINIMUM BEND RADIUS FITTINGS, UON.
23. PROVIDE MINIMUM TRADE SIZE OF 1" INCH CONDUIT FOR HORIZONTAL DISTRIBUTION OF CAT6 AUDIO VISUAL DEVICES. CONSOLIDATION OF CONDUITS IS ALLOWED WHEN EQUAL OR GREATER CONSOLIDATED AREA IS PROVIDED.
24. PROVIDE DEDICATED CONDUIT STUB PER AUDIO VISUAL DEVICE BOX. DAISY-CHAINING DEVICE BOXES IS PROHIBITED UNLESS SPECIFICALLY NOTED ON FLOOR PLANS.
25. CONDULET ("LB", ETC.) FITTINGS ARE EXPRESSLY PROHIBITED FOR AUDIO VISUAL SYSTEM PATHWAYS.
26. PROVIDE A PULL STRING OR PULL ROPE IN EMPTY/UNUSED DISTRIBUTION CONDUITS AND CONDUITS SERVING AUDIO VISUAL DEVICES SUITABLE FOR A 200 LB PULL TENSION MINIMUM.
27. PROVIDE DEDICATED SUPPORTS (e.g., CLIPS & WIRES) FOR CABLE SUPPORT HANGERS (OR SIMILAR PATHWAY COMPONENTS) INTENDED FOR AUDIO VISUAL CABLES.
28. ALL NEW AUDIO VISUAL DEVICES FOR NEW CONSTRUCTION SHALL BE FLUSH MOUNTED AND RECESSED IN WALLS, ALL CONDUITS, CABLING, ETC. SHALL BE CONCEALED IN WALLS AND ABOVE SUSPENDED AND HARD LID CEILINGS.
29. PROVIDE SLEEVES AS REQUIRED WHERE CABLES PASS THROUGH RATED WALLS
30. SURFACE WIREWAY OR DEVICES SHALL BE ALLOWED AS SHOWN ON DRAWINGS, U.O.N..
31. DO NOT SHARE SUPPORTS WITH OTHER TRADES/SYSTEMS, INCLUDING SECURITY AND/OR AUDIOVISUAL SYSTEMS. PROVIDE WIRES, HANGERS, ETC. SEPARATE FROM THE CEILING SUPPORT SYSTEM AND OTHER INSTALLED SYSTEMS, A DEDICATED SUPPORT SYSTEM IS REQUIRED FOR TELECOMMUNICATIONS CABLING.
32. PROVIDE AUDIO VISUAL CONDUITS FOR CABLING ROUTED THROUGH NON-ACCESSIBLE CEILING SPACE (e.g., 'HARD LID' CEILING), UON. SIZE CONDUITS TO MAINTAIN A FILL CAPACITY NO LESS THAN 40% PLUS 50% SPARE CAPACITY.
33. INSTALL AUDIO VISUAL DEVICES AT HEIGHTS NOTED ON SYMBOLS LIST OR DEVICE SCHEDULE, UNLESS OTHERWISE SHOWN ON THE DRAWINGS OR STATED IN SPECIFICATIONS. MOUNTING HEIGHTS ARE FROM FINISHED FLOOR TO THE CENTERLINE OF THE DEVICE. REFER TO ARCHITECTURAL ELEVATION DRAWINGS FOR ADDITIONAL INFORMATION OR EXACT LOCATIONS OF WALL/CEILING/FLOOR MOUNTED DEVICES. VERIFY HEIGHTS ARE THE SAME AS ACCOMPANYING POWER RECEPTACLES AND NOTIFY OWNER, OR OWNER'S REPRESENTATIVE OF ANY DISCREPANCY.
34. PROVIDE A 24" MINIMUM SEPARATION BETWEEN 'BACK-TO-BACK' TELECOMMUNICATION POWER OR SIGNAL DEVICES IN FRAMED WALLS.
35. DO NOT TIE CABLES TO OTHER STRUCTURES NOT INTENDED FOR THIS SPECIFIC USE. DO NOT TIE CABLES TO CABLE TRAY.
36. ROUTE AUDIO VISUAL CABLES PERPENDICULAR OR PARALLEL TO BUILDING LINES, IN GENERAL. ROUTE AUDIO VISUAL CABLES NO LESS THAN 6 INCHES FROM ANY POWER SOURCE OR FLORESCENT LIGHTING FIXTURE, AND NO LESS THAN 4 FEET FROM ANY TRANSFORMER OR MOTOR.
37. GROUP AND DRESS EXPOSED AUDIO VISUAL CABLE GROUPS USING VELCRO TIES, UON. GROUP NO MORE THAN 20 CABLES IN A SINGLE BUNDLE AS ESTABLISHED FOR PoE EQUIPMENT.
37. LABEL AUDIO VISUAL CABLES ACCORDING TO SPECIFICATIONS. PROVIDE LABELS AT BOTH ENDS, FACEPLATES, PATCH PANELS, ETC. LABELING SCHEMA SHALL BE COORDINATED SO THAT ALL LABELING, WHETHER ON FACEPLATE OR CABLE MATCHES CABLE DESCRIPTORS END TO END. PROVIDE SAMPLE LABELS TO THE OWNER, OR OWNER'S REPRESENTATIVE AND OBTAIN WRITTEN APPROVAL PRIOR TO LABELING (VERIFY FORMAT AND REQUIRED FIELDS OF INFORMATION).
38. COMPONENTS NOT RELATED TO THE SUPPORT OF THE AUDIO VISUAL ROOM(S) FUNCTION (E.G.,PIPING, DUCTWORK, PNEUMATIC TUBING, ETC.) SHALL NOT BE INSTALLED IN, PASS THROUGH, OR ENTER THE AUDIO VISUAL ROOM.
39. IT IS FORBIDDEN TO ROUTE ANY LIQUID CARRYING SYSTEMS, INCLUDING VALVES OR RUBBER TUBING COMPONENTS CONTAINING LIQUID THROUGH TELECOM OR A/V ROOMS AND SPACES
40. OUTLET AND DEVICE LOCATIONS SHOWN ARE APPROXIMATE AND SHALL BE COORDINATED IN THE FIELD WITH SFUSD. WIREWAY, CONDUITS, OUTLETS, ETC. WILL REQUIRE ADJUSTMENT IN PATHWAYS, FOR BUILDING FEATURES, ARCHITECTURAL FEATURES AND AVOIDING CONFLICT WITH FURNITURE, SHELVING, DESKS, ETC. WIREWAYS,CONDUITS , ETC. SHALL BE ROUTED IN A MANNER TO COORDINATE WITH ALL EXISTING CONDITIONS ON SITE.

ABBREVIATIONS

A	AMPERES
ACAMS	ACCESS CONTROL AND ALARM MONITORING SYSTEM
AFF	ABOVE FINISHED FLOOR
AWG	AMERICAN WIRE GAUGE
BAS	BUILDING AUTOMATION SYSTEM
BDF	BUILDING DISTRIBUTION FACILITY
C	CONDUIT
CAT3	CATEGORY 3 TWISTED PAIR UTP CABLE
CAT5E	CATEGORY 5E TWISTED PAIR UTP CABLE
CAT6	CATEGORY 6 TWISTED PAIR UTP CABLE
CATV	COMMUNITY ANTENNA TELEVISION
CEC	CCTV EQUIPMENT CABINET
DIV	DIVISION
(E)	EXISTING
EC	ELECTRICAL CONTRACTOR
EMS	ELECTRIC MANAGEMENT SYSTEM
EMT	ELECTRICAL METALLIC TUBING
(F)	FUTURE
FACP	FIRE ALARM CONTROL PANEL
FATC	FIRE ALARM TERMINAL CABINET
FO	FIBER OPTIC
GC	GENERAL CONTRACTOR
IDF	INTERMEDIATE DISTRIBUTION FACILITY
JB	JUNCTION BOX
LCP	LIGHTING CONTRAOL PANEL
MDF	MAIN DISTRIBUTION FACILITY
MH	MAINTENANCE HOLE
MM	MULTIMODE FIBER OPTIC CABLE
MPOE	MINIMUM POINT OF ENTRY
MT	EMPTY
N	NEW
NC	NORMALLY CLOSED
NO	NORMALLY CLOSED
NTS	NOT TO SCALE
OC	ON CENTER
OSP	OUTSIDE PLANT
PB	PULL BOX
PNL	PANEL
PR	PAIR (OF COPPER CONDUCTORS)
PVC	POLYVINYL CHLORIDE
REX	REQUEST TO EXIT
SAD	SEE ARCHITECTURAL DRAWINGS
SEC	SECURITY EQUIPMENT CABINET
SM	SINGLEMODE OPTICAL FIBER
SCTP	SCREENED TWISTED PAIR
STR	STRAND(S) OF FIBER
STP	SHEILDED TWISTED PAIR
TBB	TELECOM BONDING BACKBONE
TBC	TELECOM BONDING CONDUCTOR
TGB	TELECOM GROUNDING BUSBAR
TMGB	TELECOM MAIN GROUNDING BUSBAR
TYP	TYPICAL
UON	UNLESS OTHERWISE NOTED
UPS	UNINTERRUPTIBLE POWER SUPPLY
UTP	UNSHEILDED TWISTED PAIR
V	VOLTS
WP	WEATHERPROOF

NOT ALL ABBREV. MAY BE USED ON THIS PROJECT

SYSTEMS LEGEND/SYMBOLS

SYMBOL	DESCRIPTION	MODEL #	MANUFACTURER	BACK BOX	NOTES
SCR	MOTORIZED ELECTRIC SCREEN WITH LOW VOLTAGE CONTROL ORDER WITH 6-12" OF ADDITIONAL BLACK DROP	24846L +	DA-LITE		
AV HDMI IN	A/V WALL BOX WITH HDMI INPUT PLATE	WP-211T	KRAMER	SINGLE GANG	
AV HDMI OUT	A/V WALL BOX WITH HDMI OUTPUT PLATE	TP-580R	KRAMER	SINGLE GANG	
AV HDBT OUT	A/V WALL BOX WITH HDBT OUTPUT PLATE		KRAMER	SINGLE GANG	
	CEILING PROJECTOR AND MOUNT ASSEMBLY PROJECTOR WITH CHIEF MOUNT AND BRACKETS	VIVITEK	VIVITEK	CEILING MOUNTED	
S CX AV	CEILING MOUNTED 2 WAY SPEAKER, OR COAXIAL SPEAKER HIGH FIDELITY TYPE	SAROS ICE8LPT-W-T	CRESTRON	NONE	
AVR	A/V RACK WITH CONTROLLER AND INPUTS/ OUTPUTS, ETC.	MFR-1627G(X)	MIDDLE ATLANTIC	NONE	
S	SURFACE MOUNTED 2 WAY SPEAKER WITH L BRACKET	M801 H-BR 2X M 801	RCF USA	SINGLE GANG	
	RF REMOTE ANTENNA FOR WIRELESS MIC	BLX24R/SM58	SHURE		CEILING OR WALL
	RF REMOTE ANTENNA FOR ADA HEARING SYSTEM	ADA SYSTEM LT-800-072 LR-300-072	LISTEN TECH		
	CONDUIT RUN				
	CONDUIT TURNED DOWN				
	CONDUIT TURNED UP				
1	DETAIL ANNOTION				
XX	KEYED NOTE ANNOTATION				
X XX	FOCUS DETAIL ANNOTATION CALLOUTS				
X	WORK SCOPE CALL OUT / NOTE				
	CABLE SPIRAL OR TRAVELLER TYPE CABLE/WIRE ASSEMBLY				
$	REMOTE CONTROL WALL SWITCH/DESK OR WALL MOUNT				

CONDUIT WIRE FILL TABLE

Conduit Capacity Chart — *Technical Reference*

Conduit Size		1/2	3/4	1	1 1/4	1 1/2	2	2 1/2	3	3 1/2	4
I.D. Inches		.622	.824	1.049	1.380	1.610	2.067	2.469	3.068	3.548	4.026
Permissible Area*		0.12	0.21	0.34	0.60	0.82	1.34	1.92	2.95	3.96	5.09
Cable O.D. Inch	Cable Area sq. Inch										
.100	.00785	15	27	44	76	103	171	298	450	588	751
.125	.01227	10	17	28	48	66	109	191	288	376	481
.150	.01767	7	12	19	34	46	76	132	200	261	334
.175	.02405	5	9	14	25	34	56	97	147	192	245
.200	.03142	4	6	11	19	26	42	74	112	147	188
.225	.03976	3	5	8	15	20	33	59	89	116	148
.250	.04909	2	4	7	12	16	27	47	72	94	120
.275	.0594	1	3	6	10	13	22	39	59	77	99
.300	.07069	1	3	5	8	11	19	33	50	65	83
.325	.08296	1	2	4	7	10	16	28	42	55	71
.350	.09621	1	1	3	6	8	14	24	36	48	61
.375	.011045	1	1	3	5	7	12	21	32	42	53
.400	.012566	1	1	2	4	6	10	18	28	36	47
.425	.14186	1	1	2	4	5	9	16	25	32	41
.450	.15904	1	1	1	3	5	8	14	22	29	37
.475	.17721	1	1	1	3	4	7	13	20	26	33
.500	.19635	1	1	1	3	4	7	12	18	23	30
.525	.21648	0	1	1	2	3	6	11	16	21	27
.550	.23758	0	1	1	2	3	5	10	15	19	25
.575	.25967	0	1	1	1	3	5	9	13	17	22
.600	.28274	0	1	1	1	3	4	8	12	16	21
.625	.3068	0	1	1	1	2	4	7	11	15	19
.650	.33183	0	1	1	1	2	4	7	10	14	17
.675	.35785	0	0	1	1	1	3	6	10	13	16
.700	.38484	0	0	1	1	1	3	6	9	12	15
.725	.41282	0	0	1	1	1	3	5	8	11	14
.750	.44179	0	0	1	1	1	3	5	8	10	13
.775	.47173	0	0	1	1	1	3	5	7	9	12
.800	.50265	0	0	1	1	1	2	4	7	9	11

EXAMPLES:

Example A.

Sample Cable:
.227- .260" O.D.

Go down the Cable O.D. inch col-umn. Find the number equal to or greater than the cable O.D. Go across to find the number of cables in the appropriate conduit size.

.269"- Closest .275"

13 in a 11/2" Conduit.

Example B.
Three different Cables:

.227 - .260" sqd. = .0676
D434 - .411" sqd. = .1689
6350 - .275" sqd. = .0756
+
.3169
x .7854
.2489

On the Permissible Area- equal to or greater. The closest area is .034 Use a 1" Conduit

Important Note: This conduit capacity chart is to be used as a general guideline. Because local codes can vary from the NEC- West Penn Wire cannot be held responsible for this information as it pertains to your installation. Proper conduit fill is the sole responsibilty of the installer and it is your responsibility to see that your installation will pass local codes.

WEST PENN WIRE — *CABLE WITH CONFIDENCE*

els architecture+ urban design
2040 Addison St, Berkeley, CA 94704
510.549.2929 | elsarch.com

PROJECT:

PIEDMONT COMMUNITY POOL

777 MAGNOLIA AVENUE PIEDMONT, CA 94611

CLIENT:

CITY OF PIEDMONT

120 VISTA AVENUE PIEDMONT, CA 94611

PROJECT TEAM:

ARCHITECT:
ELS ARCHITECTURE AND URBAN DESIGN
2040 Addison Street
Berkeley, CA 94704
P: 510.549.2929

CIVIL ENGINEER:
BKF ENGINEERS
4670 Willow Road, Suite 250
Pleasanton, CA 94588
P: (925) 396-7704

LANDSCAPE ARCHITECT:
SWA
2200 Bridgeway
Sausalito, CA 94965
P: 415.332.5100

STRUCTURAL ENGINEER:
FORELL/ELSESSER ENGINEERS, INC.
160 Pine Street, 8th Floor
San Francisco, CA 94111
P: 415.837.0700

MEP / FIRE PROTECTION:
GUTTMANN & BLAEVOET
1620 Montgomery Street, Suite 230
San Francisco, CA 94111
P: 415.655.4000

AQUATICS:
AQUATICS DESIGN GROUP
2226 Faraday Avenue
Carlsbad, CA 92008
P: 760.438.8400

SPECIFICATIONS
TOPFLIGHT SPECS
49 Geary Street, Suite 230
San Francisco, CA 94108-5748
P: 415.546.6033

REVISION

NUMBER	DATE	DESCRIPTION

ISSUE:
100% DESIGN DEVELOPMENT

DATE:
APRIL 30, 2022

STAMP:

NOT FOR CONSTRUCTION

SHEET TITLE:

SYMBOLS, ABBREVIATIONS, GENERAL NOTES AND DRAWING LIST

SHEET NUMBER:

TV001

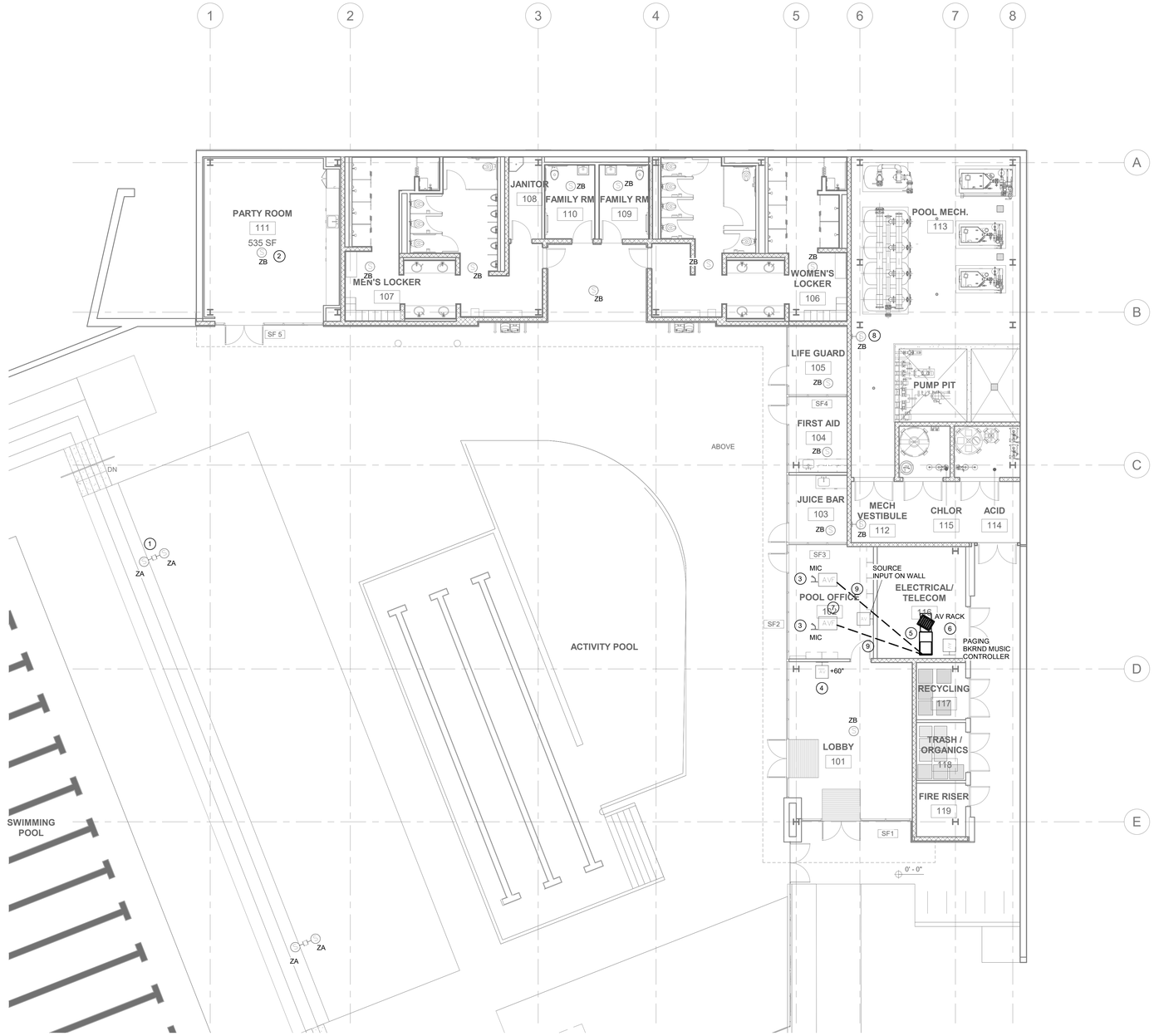

1 FLOOR PLAN - LEVEL 1 - AUDIO VISUAL
1/8" = 1'-0"

KEYNOTES

1. TYPICAL POLE MOUNTED WEATHER PROOF 2 - WAY SPEAKER ASSEMBLY 2 SPEAKERS PER POLE
2. TYPICAL IN CEILING PAGING AND BACKGROUND MUSIC SPEAKER
3. TYPICAL ZONE MIC PAGING UNIT
4. TYPICAL DIGITAL MEDIA/DIGITAL SIGNAGE PLAYER AND LED TV DISPLAY 55"
5. AV RACK TO HOUSE AUDIO EQUIPMENT, SECURITY EQUIPMENT AND TELECOM PATCHING
6. AV ZONE PAGING UNIT WALL MOUNTED
7. AV MUSIC INPUT SOURCE FOR BACKGROUND MUSIC
8. TYPICAL WALL MOUNTED PAGING SYSTEM SPEAKER
9. 1" A/V CONDUIT FOR PAGING MICS TO BACK BOARD

GENERAL NOTES

els architecture+ urban design
2040 Addison St, Berkeley, CA 94704
510.549.2929 | elsarch.com

PROJECT:

PIEDMONT COMMUNITY POOL

777 MAGNOLIA AVENUE PIEDMONT, CA 94611

CLIENT:

CITY OF PIEDMONT

120 VISTA AVENUE PIEDMONT, CA 94611

PROJECT TEAM:

ARCHITECT:
ELS ARCHITECTURE AND URBAN DESIGN
2040 Addison Street
Berkeley, CA 94704
P: 510.549.2929

CIVIL ENGINEER:
BKF ENGINEERS
4670 Willow Road, Suite 250
Pleasanton, CA 94588
P: (925) 396-7704

LANDSCAPE ARCHITECT:
SWA
2200 Bridgeway
Sausalito, CA 94965
P: 415.332.5100

STRUCTURAL ENGINEER:
FORELL/ELSESSER ENGINEERS, INC.
160 Pine Street, 6th Floor
San Francisco, CA 94111
P: 415.837.0700

MEP / FIRE PROTECTION:
GUTTMANN & BLAEVOET
1620 Montgomery Street, Suite 230
San Francisco, CA 94111
P: 415.655.4000

AQUATICS:
AQUATICS DESIGN GROUP
2226 Faraday Avenue
Carlsbad, CA 92008
P: 760.438.8400

SPECIFICATIONS
TOPFLIGHT SPECS
49 Geary Street, Suite 230
San Francisco, CA 94108-5748
P: 415.546.6033

REVISION

NUMBER	DATE	DESCRIPTION

ISSUE:
100% DESIGN DEVELOPMENT

DATE:
APRIL 30, 2022

STAMP:

NOT FOR CONSTRUCTION

SHEET TITLE:
FLOOR PLAN - LEVEL 1 AUDIO VISUAL

SHEET NUMBER:
TV201

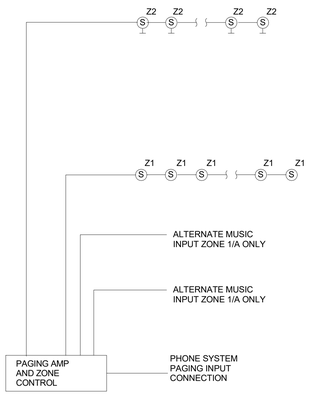

3 - PAGING SYSTEM ZONING RISER

SCALE: NONE

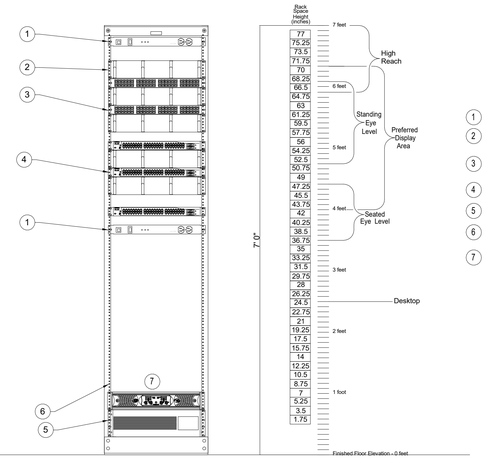

1 RACK POWER PDU

2 TYPICAL 2RU CABLE MANAGER

3 TYPICAL 1 RU HIGH DENSITY PATCH PANEL 48 PORT

4 TYPICAL OFOI 1 RU SWITCH 48 PORT

5 3 RU UPS OFOI

6 19" RACK / FRAME / CABINET

7 PAGING EQUIPMENT MOUNTS BELOW DATA CABLING

1 - DATA RACK EQUIPMENT ELEVATION

SCALE: NONE

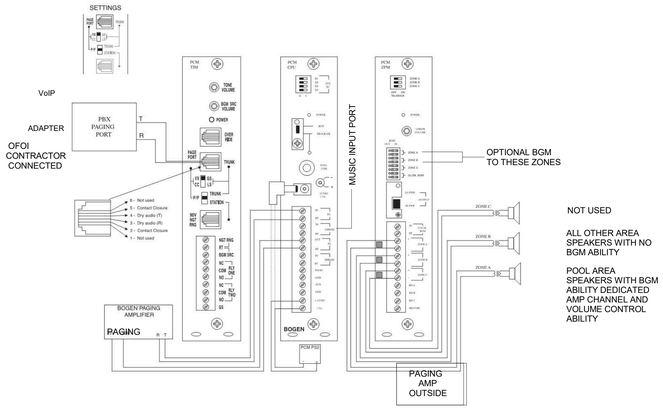

2 - BOGEN ZONE PAGING SYSTEM BLOCK RISER DIAGRAM

SCALE: NONE

els architecture+ urban design
2040 Addison St, Berkeley, CA 94704
510.549.2929 | elsarch.com

PROJECT:

PIEDMONT COMMUNITY POOL

777 MAGNOLIA AVENUE PIEDMONT, CA 94611

CLIENT:

CITY OF PIEDMONT

120 VISTA AVENUE PIEDMONT, CA 94611

PROJECT TEAM:

ARCHITECT:
ELS ARCHITECTURE AND URBAN DESIGN
2040 Addison Street
Berkeley, CA 94704
P: 510.549.2929

CIVIL ENGINEER:
BKF ENGINEERS
4670 Willow Road, Suite 250
Pleasanton, CA 94588
P: (925) 396-7704

LANDSCAPE ARCHITECT:
SWA
2200 Bridgeway
Sausalito, CA 94965
P: 415.332.5100

STRUCTURAL ENGINEER:
FORELL/ELSESSER ENGINEERS, INC.
160 Pine Street, 6th Floor
San Francisco, CA 94111
P: 415.837.0700

MEP / FIRE PROTECTION:
GUTTMANN & BLAEVOET
1620 Montgomery Street, Suite 230
San Francisco, CA 94111
P: 415.655.4000

AQUATICS:
AQUATICS DESIGN GROUP
2226 Faraday Avenue
Carlsbad, CA 92008
P: 760.438.8400

SPECIFICATIONS
TOPFLIGHT SPECS
49 Geary Street, Suite 230
San Francisco, CA 94108-5748
P: 415.546.6033

REVISION

NUMBER	DATE	DESCRIPTION

ISSUE:
100% DESIGN DEVELOPMENT

DATE:
APRIL 30, 2022

STAMP:

NOT FOR CONSTRUCTION

SHEET TITLE:

AUDIO VISUAL BLOCK RISER DIAGRAMS

SHEET NUMBER:

TV501

GENERAL NOTES

1. REFER TO WRITTEN SPECIFICATIONS FOR PROJECT SCOPE, GENERAL REQUIREMENTS, PRODUCT SPECS, AND INSTALLATION REQUIREMENTS.
2. DRAWINGS INDICATE APPROXIMATE LOCATIONS OF CEILING MOUNTED DEVICES. REFER TO ARCHITECTURAL REFLECTED CEILING PLANS AND COORDINATE EXACT LOCATIONS WITH LIGHT FIXTURES AND OTHER DEVICES.
3. MOUNTING HEIGHTS SHOWN ARE FROM FINISHED FLOOR TO THE CENTERLINE OF THE DEVICE. MOUNTING HEIGHTS SHALL BE AS SHOWN ON THE SYMBOLS LIST UNLESS OTHERWISE NOTED ON THE PLANS OR IN THE SPECIFICATIONS. REFER TO ARCHITECTURAL DRAWINGS FOR ADDITIONAL INFORMATION.
4. ELECTRICAL MATERIALS AND EQUIPMENT SHALL BE LISTED BY UNDERWRITERS LABORATORIES AND BEAR THEIR LABEL, UON.
5. REPORT TO THE ENGINEER ANY OBSERVATIONS OF CONDITIONS WHICH ARE DISCOVERED IN THE BUILDING WHICH WOULD PREVENT THE CORRECT INSTALLATION OF THE DESIGNED SYSTEM.
6. CONDUIT ROUTING (WHERE SHOWN) IS ESSENTIALLY DIAGRAMMATIC.
7. SEAL CONDUIT AND RACEWAY PENETRATIONS THROUGH FIRE RATED WALLS TO MAINTAIN THE FIRE SEPARATION RATING.
8. REFER TO ARCHITECTURAL ELEVATIONS FOR EXACT LOCATIONS OF WALL MOUNTED DEVICES. DRAWINGS INDICATE APPROXIMATE LOCATIONS ONLY.
9. PROVIDE NECESSARY EQUIPMENT AND/OR ACCESSORIES FOR A FULLY FUNCTIONAL SYSTEM THAT MEETS INTENDED DESIGN WHETHER EXPRESSLY SPECIFIED OR NOT.
10. PROVIDE REQUIRED CONDUIT, BACKBOXES, JUNCTION BOXES, AND SECURITY EQUIPMENT ENCLOSURES, WHETHER ON DRAWINGS OR NOT, UON.
11. MAINTAIN A COPY OF THE SPECIFICATIONS ACCOMPANYING DRAWINGS ON THE JOB SITE AT ALL TIMES FOR REFERENCE. BE ABLE TO PRESENT THE SPECIFICATIONS UPON REQUEST.
12. REFERENCE OTHER TRADE'S DRAWINGS AND SPECIFICATIONS (E.G., TELECOM) FOR ADDITIONAL INFORMATION AND REQUIREMENTS.
13. PROVIDE PLASTIC BUSHINGS ON EXPOSED ENDS OF CONDUIT AND SLEEVES.
14. PROVIDE APPROPRIATE NYLON PULL ROPE IN CONDUITS.
15. PROVIDE CONDUIT PLUGS IN ALL OSP SECURITY CONDUITS ACCORDING TO THE CABLE USE AND USE BLANK PLUGS FOR UNUSED CONDUITS.
16. MOUNT EQUIPMENT OR DEVICES, SUCH AS RUNWAY, CONDUITS, J-HANGER, AND PULL BOXES ACCORDING TO STATE AND LOCAL CODES FOR SEISMIC BRACING.
17. LABEL SECURITY CABLES ACCORDING TO SPECIFICATIONS. PROVIDE LABELS AT BOTH ENDS. VERIFY FORMAT AND INFORMATION FIELDS WITH AND RECEIVE APPROVAL FROM OWNER PRIOR TO LABELING.
18. LABEL ALL SECURITY CONDUITS AT EACH END OF THE CONDUIT IDENTIFYING THE DESTINATION AND USE AS "SECURITY". REFER TO ELECTRICAL SPECIFICATIONS AND DRAWINGS FOR ADDITIONAL INFORMATION.
19. REFER TO ELECTRICAL SYSTEMS DRAWINGS FOR SECURITY CONDUIT LAYOUT.
20. REFER TO SECTION 08 71 00 FOR EXIT DEVICE HARDWARE REQUIRING A LOCAL POWER SUPPLY. INTERCONNECT LOW VOLTAGE CABLES BETWEEN SYSTEM AND LOCKS.
21. SECURITY DOOR HARDWARE TO FAIL SECURE, UON.
22. EXIT DEVICE ELECTRIC HARDWARE TO HAVE MANUFACTURERS POWER SUPPLIES AND BACK-UP BATTERIES WHERE REQUIRED FOR NORMAL AND EMERGENCY OPERATION.
23. EGRESS HARDWARE SHALL BE OPERABLE AT ALL TIMES. SECURITY HARDWARE SHALL NOT PROHIBIT DIRECT EGRESS.
24. INTERFACE SECURITY CONTROLLED DOOR HARDWARE WITH THE FIRE ALARM SYSTEM AS TO NOT IMPEDE EXITING UNDER FIRE ALARM CONDITIONS
25. PROVIDE EXPANSION/DEFLECTION FITTING FOR CONDUITS CROSSING EXPANSION JOINTS.
26. CONDUIT AND INFRASTRUCTURE FOR SECURITY SYSTEMS SHALL BE COORDINATED BETWEEN ELECTRICAL CONTRACTOR AND SECURITY CONTRACTOR

SCOPE OF WORK

THIS PROJECT CONSISTS OF NEW INTRUSION ALARM SYSTEM AND CCTV CAMERA SYSTEM. PROVIDE NEW PANELS, POWER SUPPLIES, CONDUIT , WIRING, DOOR POSITION CONTACTS AND ALL ASSOCIATED WIRING AND CABLING. POWER SHALL BE PROVIDED BY ELECTRICAL CONTRACTOR.

CONTROL EQUIPMENT SHALL BE LOCATED IN THE MPOE ELECTRICAL ROOM, ALONG WITH POWER SUPPLIES . ALL CABLING SHALL BE INSTALLED IN CONDUIT STUBS FROM DEVICES TO ACCESSIBLE CEILING SPACE AND RUN OPEN TO MPOE ROOM VIA A DEDICATED J-HOOK SYSTEM OR SHARE CABLE TRAY SYSTEMS.

NEW SECURITY CAMERA LOCATIONS ARE SHOWN AS ROUGH IN CONDUIT AND BOXES ONLY. PROVIDE PULL STRINGS IN ALL CONDUITS AND FINISH PLATES TO MATCH SURFACES ON ALL BOXES. FOR OUTDOOR LOCATIONS, PROVIDE GASKETED AND SEALED WETHER PROOF COVERS.

DRAWING LIST

ABBREVIATIONS

A	AMPERES	MT	EMPTY
ACAMS	ACCESS CONTROL AND ALARM MONITORING SYSTEM	N	NEW
AFF	ABOVE FINISHED FLOOR	NC	NORMALLY CLOSED
AWG	AMERICAN WIRE GAUGE	NO	NORMALLY CLOSED
BAS	BUILDING AUTOMATION SYSTEM	NTS	NOT TO SCALE
BDF	BUILDING DISTRIBUTION FACILITY	OC	ON CENTER
C	CONDUIT	OSP	OUTSIDE PLANT
CAT3	CATEGORY 3 TWISTED PAIR UTP CABLE	PB	PULL BOX
CAT5E	CATEGORY 5E TWISTED PAIR UTP CABLE	PNL	PANEL
CAT6	CATEGORY 6 TWISTED PAIR UTP CABLE	PR	PAIR (OF COPPER CONDUCTORS)
CATV	COMMUNITY ANTENNA TELEVISION	PVC	POLYVINYL CHLORIDE
CEC	CCTV EQUIPMENT CABINET	REX	REQUEST TO EXIT
DIV	DIVISION	SAD	SEE ARCHITECTURAL DRAWINGS
(E)	EXISTING	SEC	SECURITY EQUIPMENT CABINET
EC	ELECTRICAL CONTRACTOR	SM	SINGLEMODE OPTICAL FIBER
EMS	ELECTRIC MANAGEMENT SYSTEM	SCTP	SCREENED TWISTED PAIR
EMT	ELECTRICAL METALLIC TUBING	STR	STRAND(S) OF FIBER
(F)	FUTURE	STP	SHEILDED TWISTED PAIR
FACP	FIRE ALARM CONTROL PANEL	TBB	TELECOM BONDING BACKBONE
FATC	FIRE ALARM TERMINAL CABINET	TBC	TELECOM BONDING CONDUCTOR
FO	FIBER OPTIC	TGB	TELECOM GROUNDING BUSBAR
GC	GENERAL CONTRACTOR	TMGB	TELECOM MAIN GROUNDING BUSBAR
IDF FACILITY	INTERMEDIATE DISTRIBUTION	TYP	TYPICAL
JB	JUNCTION BOX	UON	UNLESS OTHERWISE NOTED
LCP	LIGHTING CONTRAOL PANEL	UPS	UNINTERRUPTIBLE POWER SUPPLY
MDF	MAIN DISTRIBUTION FACILITY	UTP	UNSHEILDED TWISTED PAIR
MH	MAINTENANCE HOLE	V	VOLTS
MM	MULTIMODE FIBER OPTIC CABLE	WP	WEATHERPROOF
MPOE	MINIMUM POINT OF ENTRY		

SYSTEMS LEGEND/SYMBOLS

SYMBOL	DESCRIPTION	MODEL #	REMARKS	MANUFACTURER	MT. HEIGHT
SEC PWR	ACCESS CONTROL/SECURITY POWER SUPPLY PANEL	SEE SPECIFICATIONS			AS REQUIRED
SEC CNTL	DOOR CONTROLLER PANEL	SEE SPECIFICATIONS			AS REQUIRED
SEC STC	SECURITY TERMINAL CABINET 24X24X8 NEMA 1 TELEHPHONE TYPE WITH LOCKING FRONT DOOR	NONE			AS REQUIRED
R	STANDARD CARD READER ASSEMBLY, SEE SPECIFICATIONS	SEE SPECIFICATIONS			+48" TO CL OF OPERABLE CONTROL
R M	MULLION MOUNT CARD READER ASSEMBLY, SEE SPECIFICATIONS	SEE SPECIFICATIONS			+48" TO CL OF OPERABLE CONTROL
R B	BOLLARD MOUNTED STANDARD CARD READER ASSEMBLY	SEE SPECIFICATIONS			+48" TO CL OF OPERABLE CONTROL
	DOOR POSITION MAGNETIC CONTACT	SEE SPECIFICATIONS 1076C AND/OR 4191SN			SEE DETAIL SHEETS
D	DOOR POSITION MAGNETIC CONTACT - DPST	SEE SPECIFICATIONS 1076C AND/OR 4191SN			SEE DETAIL SHEETS
X	CEILING OR WALL MOUNTED REQUEST TO EXIT SENSOR OR CONNECTION TO REX SWITCH IN DOOR HARDWARE	SEE SPECIFICATIONS			SEE DETAIL SHEETS
S	DOOR STRIKE / ELECTRIFIED HARDWARE CONNECTION	SEE SPECIFICATIONS			SEE DETAIL SHEETS
DA PED	DURESS ALARM / EMERGENCY CALL PEDESTAL STATION WITH EMERGENCY DIALER AND ALARM LAMP	SEE SPECIFICATIONS			+48" TO CL OF OPERABLE CONTROL
DA U	DURESS ALARM PUSHBUTTON ASSEMBLY UNDER DESK MOUNT	SEE SPECIFICATIONS			UNDER DESK
DA	DURESS ALARM PUSHBUTTON ASSEMBLY	SEE SPECIFICATIONS			+48" TO CL OF OPERABLE CONTROL
	SECURITY MOTION SENSOR	SEE SPECIFICATIONS VPLEX DT8050A-SN			+96" TO +108"
	SECURITY MOTION SENSOR 360 DEGREE COVERAGE	SEE SPECIFICATIONS			CEILING MOUNTED
K	SECURITY ALARM KEYPAD STATION	SEE SPECIFICATIONS VISTA 6160			+48" TO CL OF OPERABLE CONTROL
RR	SECURITY REMOTE DOOR RELEASE	SEE SPECIFICATIONS			+48" TO CL OF OPERABLE CONTROL
IC CA	SECURITY VIDEO INTERCOM STATION	SEE SPECIFICATIONS			+48" TO CL OF OPERABLE CONTROL
IC M	SECURITY VIDEO INTERCOM MASTER	SEE SPECIFICATIONS			+96" TO +108"
	EMERGENCY DOOR LOCK DOWN STATION	RMS-6T-LP-KL-Y KEY #211		RELIABLE SECURITY GROUP	+48" TO CL OF OPERABLE CONTROL
GB	SECURITY GLASS BREAK DETECTOR	SEE SPECIFICATIONS VPLEX FG1625SN			
NVR	CCTV SURVEILLANCE CONTROL/SECURITY NETWORK VIDEO RECORDER, RACK MOUNTED	SEE SPECIFICATIONS	FUTURE NVR LOCATION	OFOI	RACK MOUNTED
X	DOME FIXED "IP" CAMERA LOCATION INTERIOR OR EXTERIOR "X" DENOTES CAMERA RESOLUTION IN MEGAPIXELS	SEE SPECIFICATIONS	FUTURE CAMERA LOCATION PROVIDE PULL STRING	OFOI	+96" TO +108" WALL OR CEILING MOUNTED
	PTZ "IP" CAMERA LOCATION EXTERIOR POLE MOUNT	SEE SPECIFICATIONS	FUTURE CAMERA LOCATION PROVIDE PULL STRING	OFOI	
180 M	MULTI VIEW "IP" CAMERA LOCATION 180 DEGREES VIEW	SEE SPECIFICATIONS	FUTURE CAMERA LOCATION PROVIDE PULL STRING	OFOI	+96" TO +108" WALL OR CEILING MOUNTED
270 M	MULTI VIEW "IP" CAMERA LOCATION 270 DEGREES VIEW	SEE SPECIFICATIONS	FUTURE CAMERA LOCATION PROVIDE PULL STRING	OFOI	+96" TO +108" WALL OR CEILING MOUNTED
360 M	MULTI VIEW "IP" CAMERA LOCATION 360 DEGREES VIEW	SEE SPECIFICATIONS	FUTURE CAMERA LOCATION PROVIDE PULL STRING	OFOI	+96" TO +108" WALL OR CEILING MOUNTED
xx	SECURITY CAMERA FIELD OF VIEW APPROX. "FOV"	NA			
LR PED	PEDESTAL MOUNTED LONG RANGE CARD READER ASSEMBLY	SEE SPECIFICATIONS			+48" TO CL OF OPERABLE CONTROL
RR	SECURITY REMOTE DOOR RELEASE/UNLOCK	SEE SPECIFICATIONS			
SEC PANEL	SECURITY ALARM PANEL	SEE SPECIFICATIONS VISTA 128BPT/LTE			

els architecture+ urban design
2040 Addison St, Berkeley, CA 94704
510.549.2929 | elsarch.com

PROJECT:

PIEDMONT COMMUNITY POOL

777 MAGNOLIA AVENUE PIEDMONT, CA 94611

CLIENT:

CITY OF PIEDMONT

120 VISTA AVENUE PIEDMONT, CA 94611

PROJECT TEAM:

ARCHITECT:
ELS ARCHITECTURE AND URBAN DESIGN
2040 Addison Street
Berkeley, CA 94704
P: 510.549.2929

CIVIL ENGINEER:
BKF ENGINEERS
4670 Willow Road, Suite 250
Pleasanton, CA 94588
P: (925) 396-7704

LANDSCAPE ARCHITECT:
SWA
2200 Bridgeway
Sausalito, CA 94965
P: 415.332.5100

STRUCTURAL ENGINEER:
FORELL/ELSESSER ENGINEERS, INC.
160 Pine Street, 6th Floor
San Francisco, CA 94111
P: 415.837.0700

MEP / FIRE PROTECTION:
GUTTMANN & BLAEVOET
1620 Montgomery Street, Suite 230
San Francisco, CA 94111
P: 415.655.4000

AQUATICS:
AQUATICS DESIGN GROUP
2226 Faraday Avenue
Carlsbad, CA 92008
P: 760.438.8400

SPECIFICATIONS
TOPFLIGHT SPECS
49 Geary Street, Suite 230
San Francisco, CA 94108-5748
P: 415.546.6033

REVISION

NUMBER	DATE	DESCRIPTION

ISSUE:
100% DESIGN DEVELOPMENT

DATE:
APRIL 30, 2022

STAMP:

NOT FOR CONSTRUCTION

SHEET TITLE:

SYMBOLS, ABBREVIATIONS, GENERAL NOTES AND DRAWING LIST

SHEET NUMBER:

TS001

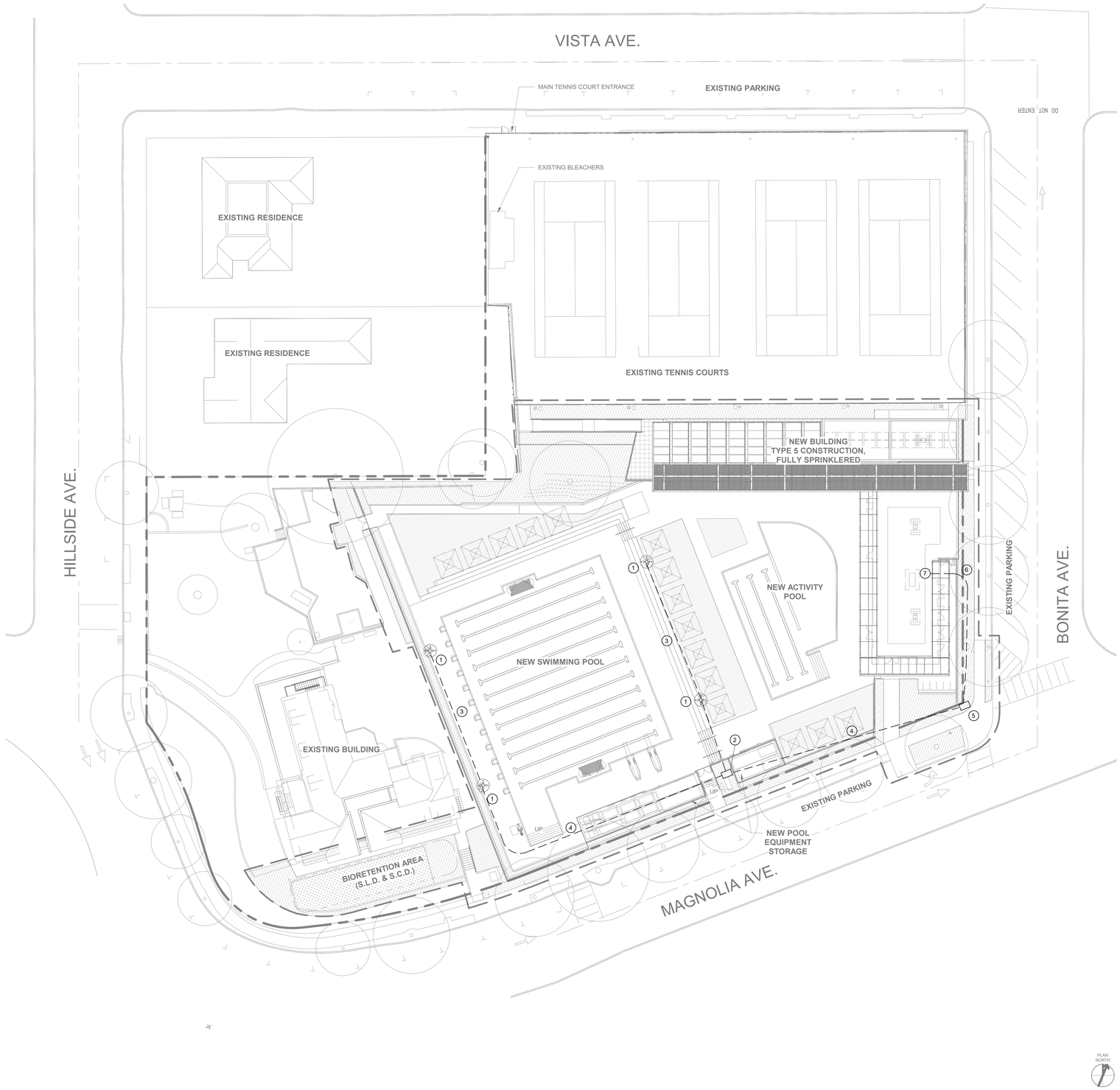

1 SITE PLAN - SECURITY
1" = 20'-0"

GENERAL NOTES

SHEET NOTES

1. TYPICAL NEW 360 VIEW POLE MOUNTED CCTV CAMERA POE POWERED
2. NEW GROUND BOX N48 TELECOM TYPE
3. NEW 1 1/2" UNDERGROUND CONDUIT
4. NEW 2" UNDERGROUND CONDUIT
5. CONNECT TO TELECOM PULL BOX AT THIS LOCATION
6. NEW 2" CONDUIT TO TELECOM BACK BOARD
7. TERMINATE CONDUIT AT TELECOM BACK BOARD AREA

LEGEND

els architecture+ urban design
2040 Addison St, Berkeley, CA 94704
510.549.2929 | elsarch.com

PROJECT:

PIEDMONT COMMUNITY POOL

777 MAGNOLIA AVENUE PIEDMONT, CA 94611

CLIENT:

CITY OF PIEDMONT

120 VISTA AVENUE PIEDMONT, CA 94611

PROJECT TEAM:

ARCHITECT:
ELS ARCHITECTURE AND URBAN DESIGN
2040 Addison Street
Berkeley, CA 94704
P: 510.549.2929

CIVIL ENGINEER:
BKF ENGINEERS
4670 Willow Road, Suite 250
Pleasanton, CA 94588
P: (925) 396-7704

LANDSCAPE ARCHITECT:
SWA
2200 Bridgeway
Sausalito, CA 94965
P: 415.332.5100

STRUCTURAL ENGINEER:
FORELL/ELSESSER ENGINEERS, INC.
160 Pine Street, 6th Floor
San Francisco, CA 94111
P: 415.837.0700

MEP / FIRE PROTECTION:
GUTTMANN & BLAEVOET
1620 Montgomery Street, Suite 230
San Francisco, CA 94111
P: 415.655.4000

AQUATICS:
AQUATICS DESIGN GROUP
2226 Faraday Avenue
Carlsbad, CA 92008
P: 760.438.8400

SPECIFICATIONS
TOPFLIGHT SPECS
49 Geary Street, Suite 230
San Francisco, CA 94108-5748
P: 415.546.6033

REVISION

NUMBER	DATE	DESCRIPTION

ISSUE:
100% DESIGN DEVELOPMENT

DATE:
APRIL 30, 2022

STAMP:

NOT FOR CONSTRUCTION

SHEET TITLE:
SITE PLAN-SECURITY

SHEET NUMBER:
TS101

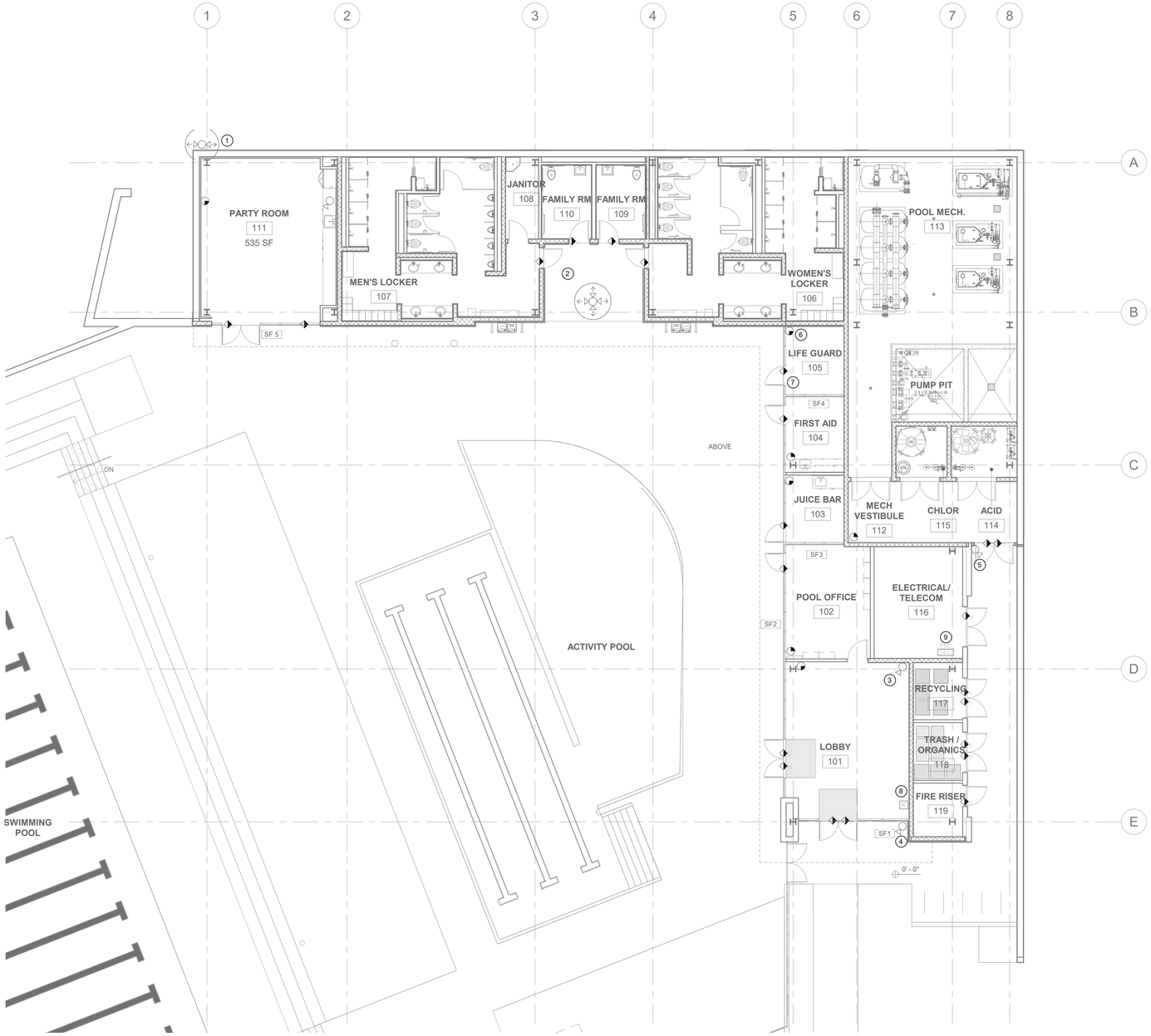

1 FLOOR PLAN - LEVEL 1 - SECURITY
1/8" = 1'-0"

KEYNOTES

1. TYPICAL 180 DEGREE VIEW WALL OR CEILING MOUNTED CAMERA
2. TYPICAL 360 DEGREE VIEW CEILING MOUNTED CAMERA
3. TYPICAL CORNER MOUNTED CCTV WALL CAMERA
4. TYPICAL EXTERIOR WALL OR CEILING MOUNTED CCTV CAMERA
5. WALL MOUNTED CCTV CAMERA
6. WALL MOUNTED SECURITY MOTION SENSOR
7. TYPICAL DUAL CONTACT DOOR POSITION SENSOR
8. WALL MOUNTED SECURITY ALARM KEYPAD
9. SECURITY ALARM CONTROL PANEL WITH LTE DIALER

GENERAL NOTES

els architecture+ urban design
2040 Addison St, Berkeley, CA 94704
510.549.2929 | elsarch.com

PROJECT:

PIEDMONT COMMUNITY POOL

777 MAGNOLIA AVENUE PIEDMONT, CA 94611

CLIENT:

CITY OF PIEDMONT

120 VISTA AVENUE PIEDMONT, CA 94611

PROJECT TEAM:

ARCHITECT:
ELS ARCHITECTURE AND URBAN DESIGN
2040 Addison Street
Berkeley, CA 94704
P: 510.549.2929

CIVIL ENGINEER:
BKF ENGINEERS
4670 Willow Road, Suite 250
Pleasanton, CA 94588
P: (925) 396-7704

LANDSCAPE ARCHITECT:
SWA
2200 Bridgeway
Sausalito, CA 94965
P: 415.332.5100

STRUCTURAL ENGINEER:
FORELL/ELSESSER ENGINEERS, INC.
160 Pine Street, 6th Floor
San Francisco, CA 94111
P: 415.837.0700

MEP / FIRE PROTECTION:
GUTTMANN & BLAEVOET
1620 Montgomery Street, Suite 230
San Francisco, CA 94111
P: 415.655.4000

AQUATICS:
AQUATICS DESIGN GROUP
2226 Faraday Avenue
Carlsbad, CA 92008
P: 760.438.8400

SPECIFICATIONS
TOPFLIGHT SPECS
49 Geary Street, Suite 230
San Francisco, CA 94108-5748
P: 415.546.6033

REVISION

NUMBER	DATE	DESCRIPTION

ISSUE:
100% DESIGN DEVELOPMENT

DATE:
APRIL 30, 2022

STAMP:

NOT FOR CONSTRUCTION

SHEET TITLE:
FLOOR PLAN - LEVEL 1 SECURITY

SHEET NUMBER:
TS201

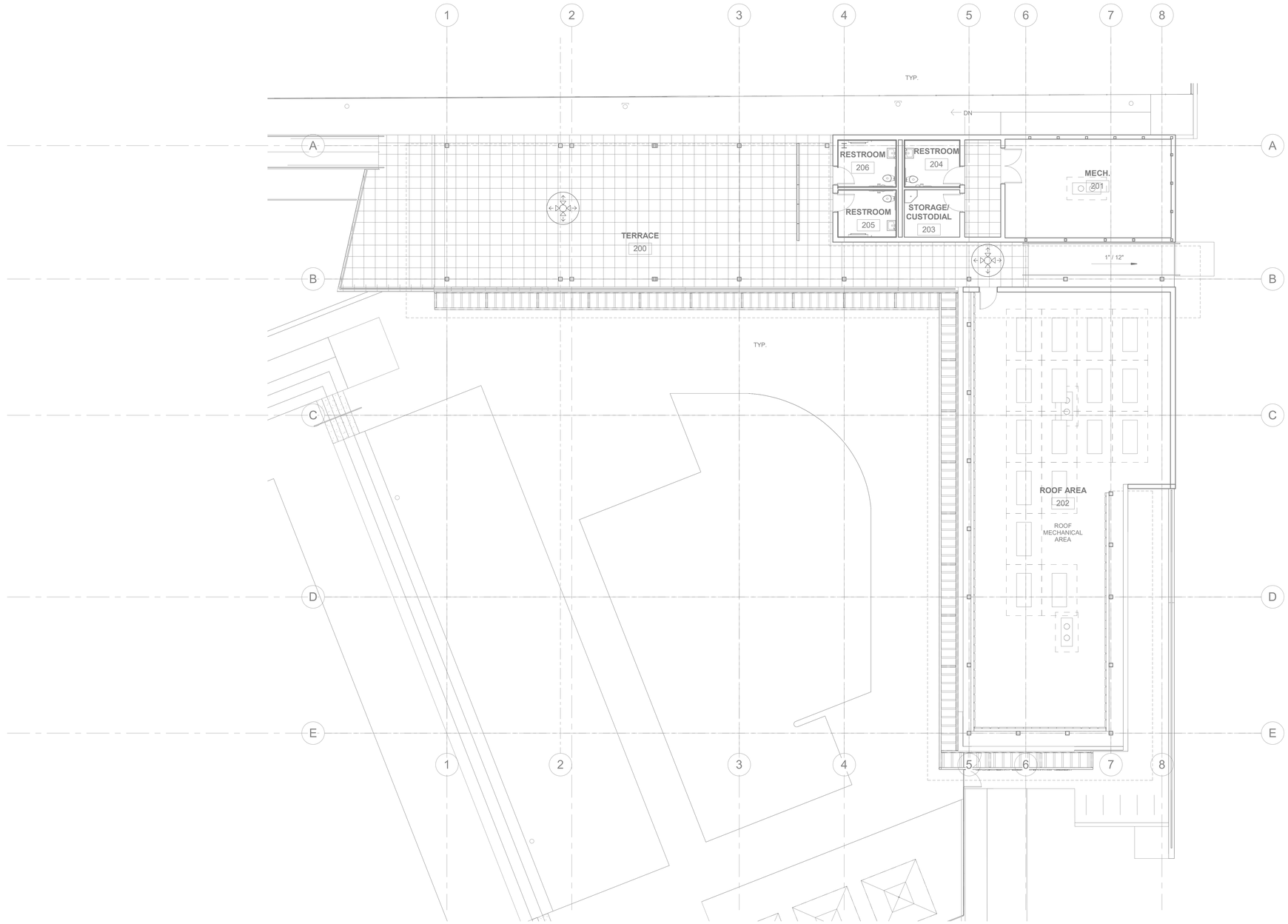

1 HIGH ROOF PLAN - SECURITY
1/8" = 1'-0"

KEYNOTES

GENERAL NOTES

els architecture+ urban design
2040 Addison St, Berkeley, CA 94704
510.549.2929 | elsarch.com

PROJECT:

PIEDMONT COMMUNITY POOL

777 MAGNOLIA AVENUE PIEDMONT, CA 94611

CLIENT:

CITY OF PIEDMONT

120 VISTA AVENUE PIEDMONT, CA 94611

PROJECT TEAM:

ARCHITECT:
ELS ARCHITECTURE AND URBAN DESIGN
2040 Addison Street
Berkeley, CA 94704
P: 510.549.2929

CIVIL ENGINEER:
BKF ENGINEERS
4670 Willow Road, Suite 250
Pleasanton, CA 94588
P: (925) 396-7704

LANDSCAPE ARCHITECT:
SWA
2200 Bridgeway
Sausalito, CA 94965
P: 415.332.5100

STRUCTURAL ENGINEER:
FORELL/ELSESSER ENGINEERS, INC.
160 Pine Street, 6th Floor
San Francisco, CA 94111
P: 415.837.0700

MEP / FIRE PROTECTION:
GUTTMANN & BLAEVOET
1620 Montgomery Street, Suite 230
San Francisco, CA 94111
P: 415.655.4000

AQUATICS:
AQUATICS DESIGN GROUP
2226 Faraday Avenue
Carlsbad, CA 92008
P: 760.438.8400

SPECIFICATIONS
TOPFLIGHT SPECS
49 Geary Street, Suite 230
San Francisco, CA 94108-5748
P: 415.546.6033

REVISION

NUMBER	DATE	DESCRIPTION

ISSUE:
100% DESIGN DEVELOPMENT

DATE:
APRIL 30, 2022

STAMP:

NOT FOR CONSTRUCTION

SHEET TITLE:
ROOF PLAN - SECURITY

SHEET NUMBER:
TS205

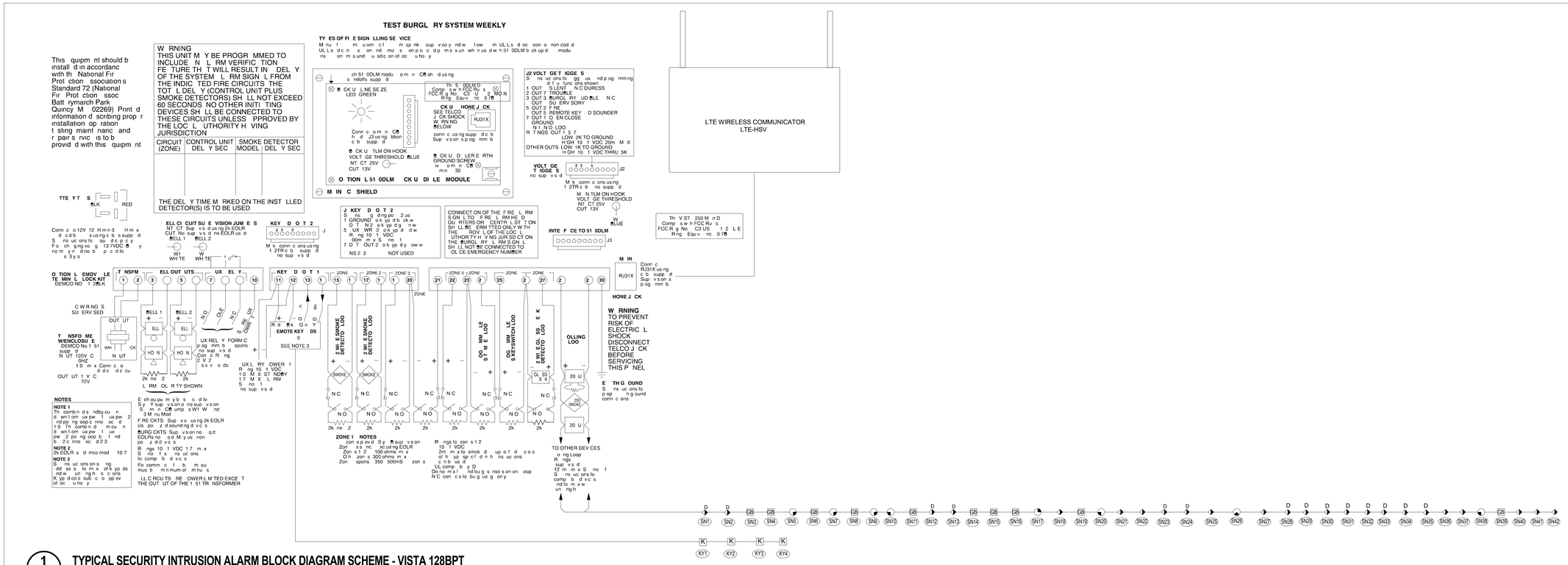

1 - TYPICAL SECURITY INTRUSION ALARM BLOCK DIAGRAM SCHEME - VISTA 128BPT

SCALE: NONE

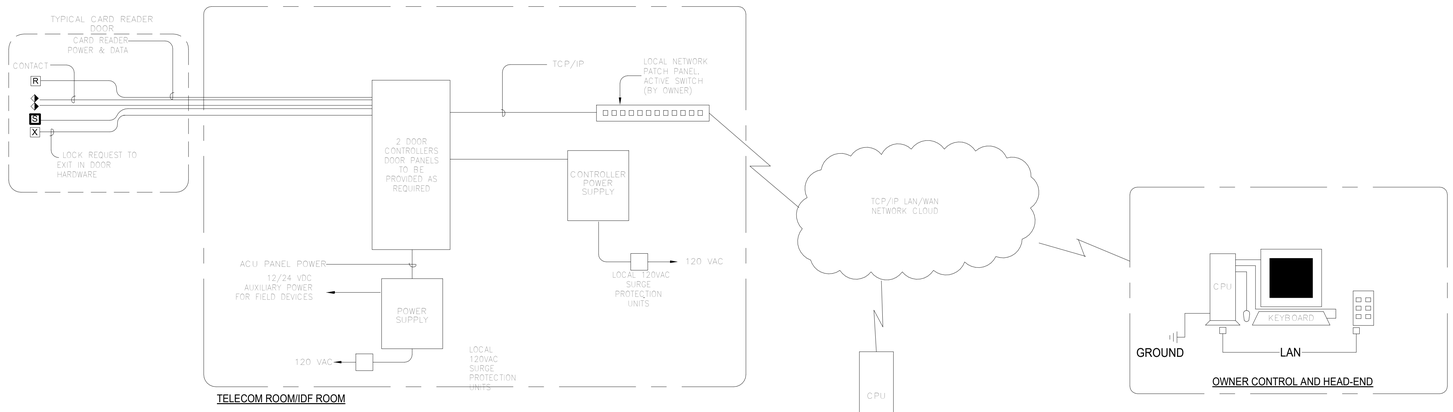

3 - DOOR SECURITY REQUIREMENTS

SCALE: NONE

2 - TYPICAL SECURITY CARD ACCESS BLOCK DIAGRAM SCHEME

SCALE: NONE

els architecture+ urban design
2040 Addison St, Berkeley, CA 94704
510.549.2929 | elsarch.com

PROJECT:

PIEDMONT COMMUNITY POOL

777 MAGNOLIA AVENUE PIEDMONT, CA 94611

CLIENT:

CITY OF PIEDMONT

120 VISTA AVENUE PIEDMONT, CA 94611

PROJECT TEAM:

ARCHITECT:
ELS ARCHITECTURE AND URBAN DESIGN
2040 Addison Street
Berkeley, CA 94704
P: 510.549.2929

CIVIL ENGINEER:
BKF ENGINEERS
4670 Willow Road, Suite 250
Pleasanton, CA 94588
P: (925) 396-7704

LANDSCAPE ARCHITECT:
SWA
2200 Bridgeway
Sausalito, CA 94965
P: 415.332.5100

STRUCTURAL ENGINEER:
FORELL/ELSESSER ENGINEERS, INC.
160 Pine Street, 6th Floor
San Francisco, CA 94111
P: 415.837.0700

MEP / FIRE PROTECTION:
GUTTMANN & BLAEVOET
1620 Montgomery Street, Suite 230
San Francisco, CA 94111
P: 415.655.4000

AQUATICS:
AQUATICS DESIGN GROUP
2226 Faraday Avenue
Carlsbad, CA 92008
P: 760.438.8400

SPECIFICATIONS
TOPFLIGHT SPECS
49 Geary Street, Suite 230
San Francisco, CA 94108-5748
P: 415.546.6033

REVISION

NUMBER	DATE	DESCRIPTION

ISSUE:
100% DESIGN DEVELOPMENT

DATE:
APRIL 30, 2022

STAMP:

NOT FOR CONSTRUCTION

SHEET TITLE:

SECURITY BLOCK RISER DIAGRAMS

SHEET NUMBER:

TS501

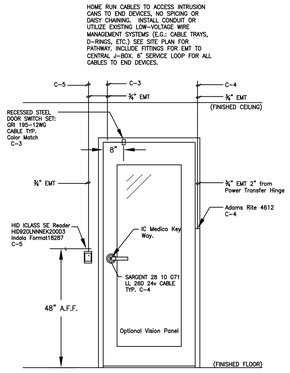

SEE ARCHITECTURAL PLANS FOR DOOR SCHEDULE
FOR ADDITIONAL INFORMATION

9 SINGLE DOOR LEFT HAND
SCALE: NONE

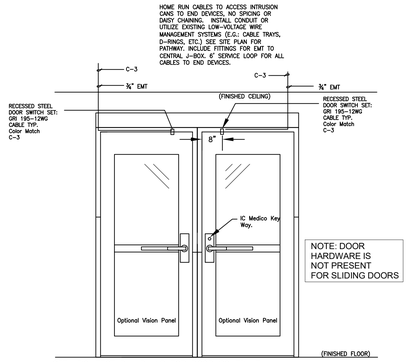

SEE ARCHITECTURAL PLANS FOR DOOR SCHEDULE
FOR ADDITIONAL INFORMATION

6 DOUBLE OR SLIDER WITH OPENER
SCALE: NONE

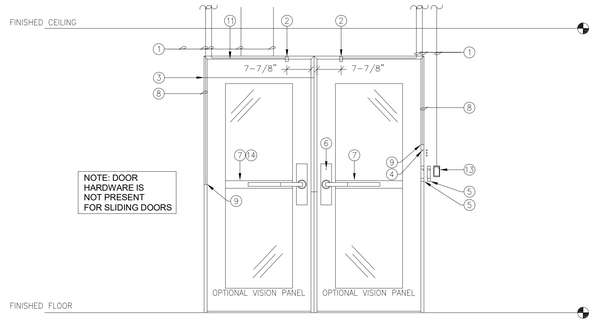

NOTE:
1) HOME RUN CABLES TO ACCESS INTRUSION CANS TO END DEVICES, NO SPLICING OR DAISY CHAINING.
2) INSTALL CONDUIT OR UTILIZE EXISTING LOW-VOLTAGE WIRE MANAGEMENT SYSTEMS (E.G. CABLE TRAY, D-RINGS, ETC.), SEE SITE PLAN FOR PATHWAYS.
3) INCLUDE FITTINGS FOR EMT TO CENTRAL J-BOX. 3" SERVICE LOOP FOR ALL CABLES TO END DEVICES.
4) SEE DOOR SCHEDULE FOR ADDITIONAL INFORMATION

3 DOUBLE OR SLIDER DOOR WITH OPENER
SCALE: NONE

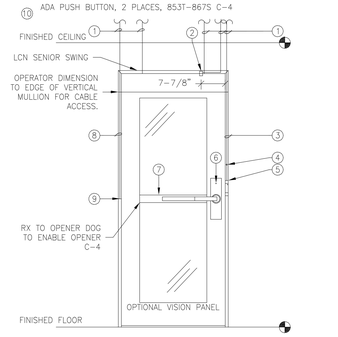

NOTE:
1) HOME RUN CABLES TO ACCESS INTRUSION CANS TO END DEVICES, NO SPLICING OR DAISY CHAINING.
2) INSTALL CONDUIT OR UTILIZE EXISTING LOW-VOLTAGE WIRE MANAGEMENT SYSTEMS (E.G. CABLE TRAY, D-RINGS, ETC.), SEE SITE PLAN FOR PATHWAYS.
3) INCLUDE FITTINGS FOR EMT TO CENTRAL J-BOX. 3" SERVICE LOOP FOR ALL CABLES TO END DEVICES.
4) SEE DOOR SCHEDULE FOR ADDITIONAL INFORMATION

1 SINGLE DOOR W/OPENER - LEFT HAND
SCALE: NONE

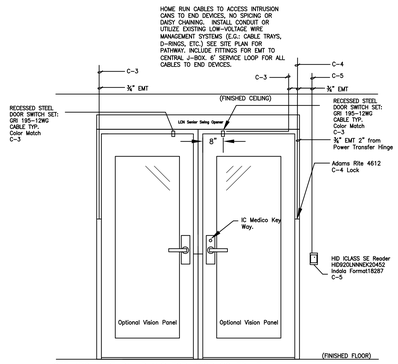

SEE ARCHITECTURAL PLANS FOR DOOR SCHEDULE
FOR ADDITIONAL INFORMATION

7 DOUBLE OR SLIDER WITH OPENER
SCALE: NONE

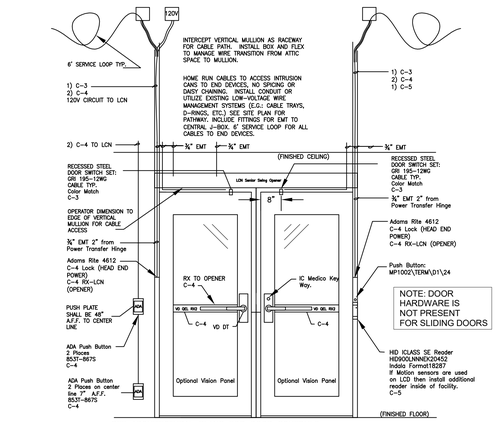

SEE ARCHITECTURAL PLANS FOR DOOR SCHEDULE
FOR ADDITIONAL INFORMATION

4 STOREFRONT DOUBLE OR SLIDER WITH OPENER
SCALE: NONE

1 3/4" EMT
2 RECESSED STEEL DOOR SWITCH SET: GRI 195-12WG CABLE TYP. COLOR MATCH C-3
3 3/4" EMT 2" FROM READER
4 PUSH BUTTON: MP1002/TERM/D4 C-3
5 HID ICLASS SE READER HID900LNNNEK20452 INDALA FORMAT18287 C-5
6 IC MEDICO KEY WAY
7 SARGENT 28 10 G71 LL 26D 24V CABLE TYP. C-4
8 3/4" EMT 2" FROM POWER TRANSFER HINGE
9 AR 4612 OR COMMAND ACCESS HINGE #ETH12WH C-4

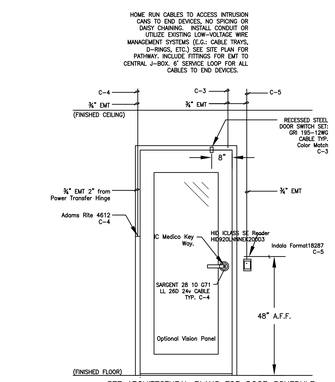

SEE ARCHITECTURAL PLANS FOR DOOR SCHEDULE
FOR ADDITIONAL INFORMATION

8 SINGLE DOOR - RIGHT HAND
SCALE: NONE

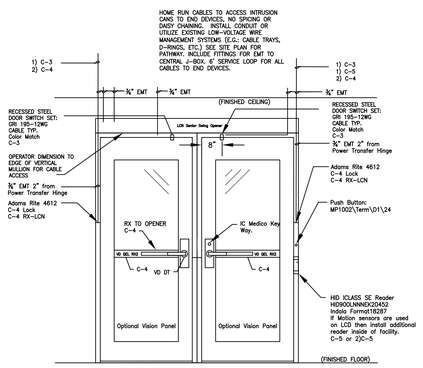

SEE ARCHITECTURAL PLANS FOR DOOR SCHEDULE
FOR ADDITIONAL INFORMATION

5 DOUBLE DOOR
SCALE: NONE

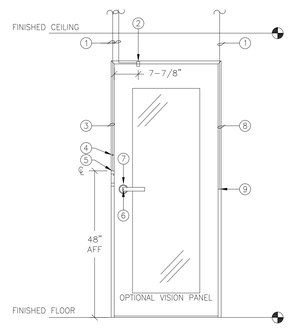

NOTE:
1) HOME RUN CABLES TO ACCESS INTRUSION CANS TO END DEVICES, NO SPLICING OR DAISY CHAINING.
2) INSTALL CONDUIT OR UTILIZE EXISTING LOW-VOLTAGE WIRE MANAGEMENT SYSTEMS (E.G. CABLE TRAY, D-RINGS, ETC.), SEE SITE PLAN FOR PATHWAYS.
3) INCLUDE FITTINGS FOR EMT TO CENTRAL J-BOX. 3" SERVICE LOOP FOR ALL CABLES TO END DEVICES.
4) SEE DOOR SCHEDULE FOR ADDITIONAL INFORMATION

2 SINGLE DOOR - RIGHT HAND
SCALE: NONE

els architecture+ urban design
2040 Addison St, Berkeley, CA 94704
510.549.2929 | elsarch.com

PROJECT:

PIEDMONT COMMUNITY POOL

777 MAGNOLIA AVENUE PIEDMONT, CA 94611

CLIENT:

CITY OF PIEDMONT

120 VISTA AVENUE PIEDMONT, CA 94611

PROJECT TEAM:

ARCHITECT:
ELS ARCHITECTURE AND URBAN DESIGN
2040 Addison Street
Berkeley, CA 94704
P: 510.549.2929

CIVIL ENGINEER:
BKF ENGINEERS
4670 Willow Road, Suite 250
Pleasanton, CA 94588
P: (925) 396-7704

LANDSCAPE ARCHITECT:
SWA
2200 Bridgeway
Sausalito, CA 94965
P: 415.332.5100

STRUCTURAL ENGINEER:
FORELL/ELSESSER ENGINEERS, INC.
160 Pine Street, 6th Floor
San Francisco, CA 94111
P: 415.837.0700

MEP / FIRE PROTECTION:
GUTTMANN & BLAEVOET
1620 Montgomery Street, Suite 230
San Francisco, CA 94111
P: 415.655.4000

AQUATICS:
AQUATICS DESIGN GROUP
2226 Faraday Avenue
Carlsbad, CA 92008
P: 760.438.8400

SPECIFICATIONS
TOPFLIGHT SPECS
49 Geary Street, Suite 230
San Francisco, CA 94108-5748
P: 415.546.6033

REVISION

NUMBER	DATE	DESCRIPTION

ISSUE:
100% DESIGN DEVELOPMENT

DATE:
APRIL 30, 2022

STAMP:

NOT FOR CONSTRUCTION

SHEET TITLE:
SECURITY DETAILS

SHEET NUMBER:
TS701

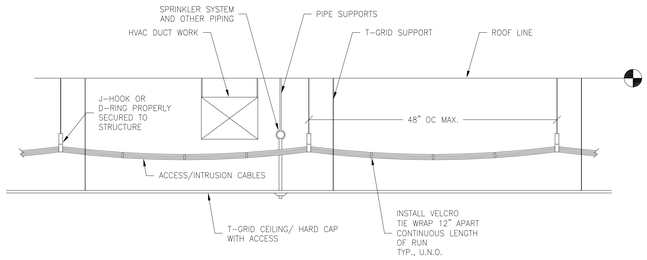

9 - J-HOOK AND D-RING PATHWAY ABOVE SUSPENDED CEILINGS
SCALE: NONE

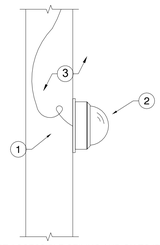

NOTES TO DETAIL:

1. ROUTE CABLING TO NEAREST ACCESSIBLE CEILING AND ON TO IDF ROOMS OR HOME RUN TO NEAREST SECURITY RISER LOCATION (UNLESS NOTED OTHERWISE).
2. CCTV CAMERA, ENCLOSURE, MOUNT AND MOUNTING SUPPORT HARDWARE AS REQUIRED BY THE MANUFACTURER.
3. CONTRACTOR SHALL WORK WITH TELECOM CABLING INSTALLER FOR CABLING REQUIREMENTS AND FOR ADEQUATE SPARE CABLE LENGTH TO ALLOW CAMERA RELOCATION WITHIN A 10' RADIUS OF CURRENT LOCATION. INSTRUCT TELECOM CONTRACTOR TO LEAVE A 10' SERVICE LOOP AT CAMERA LOCATIONS WHERE SUSPENDED OR ACCESSIBLE CEILING IS FOUND.

GENERAL NOTE:

A. DETAIL REPRESENTS TYPICAL REQUIREMENTS. SEE THE SECURITY PLANS AND SPECIFICATIONS FOR EXACT REQUIREMENTS AT EACH CAMERA.

B. REFERENCE SECURITY LEGEND FOR DEVICE CONDUIT AND BACKBOX REQUIREMENTS.

10 - TYPICAL DOME CAMERA MOUNTING / CABLING ACCESSIBLE WALL
SCALE: NONE

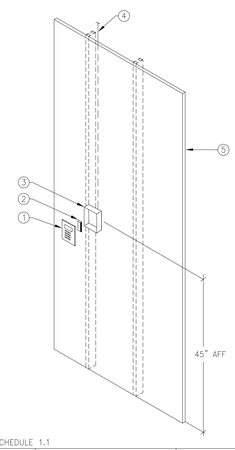

SCHEDULE 1.1

KEYNOTE	DESCRIPTION	MFR./PART NO.
1	KEYPAD	SEE DETAIL/HARDWARE SECTION FOR ADDITIONAL INFORMATION
2	CARD READER (MOUNT BEHIND KEYPAD)	
3	KEYPAD BACK BOX	
4	FISH CABLE DOWN WALL	
5	WALL AS OCCURS	

11 - CARD READER OR KEYPAD DETAIL
SCALE: NONE

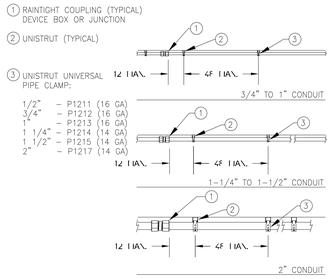

5 - CONDUIT SPACING STRAPPING DETAILS / UNISTRUT
SCALE: NONE

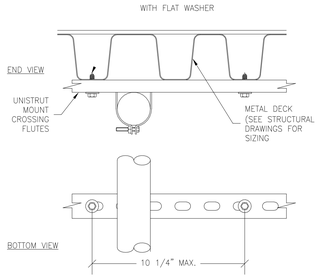

6 - CONDUIT TO CORRUGATED METAL DECKING
SCALE: NONE

NOTE:
ALL CABLES TO BE LABELED AS FOLLOWS:
(HEAD-END BUILDING NUMBER)-(CABINET (SPECIFY ELK/IMRON)),
-(DEVICE BUILDING NUMBER)-(DOOR ID)
(EXAMPLE: 1-ELK-2-A027)

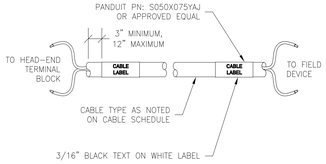

7 - SECURITY CABLE LABELING DETAIL
SCALE: NONE

1. STUD WALL PER ARCHITECTURAL
2. 3/4" FIRE RETARDANT PLYWOOD BACKPLANE CUT TO FIT
3. #9x1" ITW BUILDEX TRUEGRIP GT OF EQUAL AT EACH CORNER OF CABINET INTO PLYWOOD.
4. #14X 1" OVAL HEAD WOOD SCREW INTO PLYWOOD
5. PLYWOOD BACKPLANE TO STUD CENTERS USE; #12x2-1/2" COARSE WOOD SCREWS AT 12" O.C. AT PERIMETER STUDS AND 24" O.C. TO FIELD STUDS. PRE-DRILL AND VERIFY CENTER LINE TO STUD.

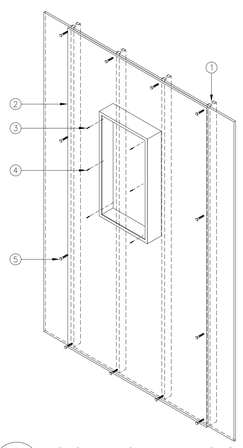

8 - SECURITY CABINET ANCHOR DETAIL
SCALE: NONE

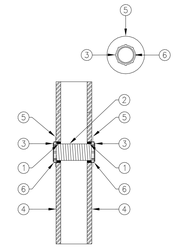

1. CAULK ACCORDING TO DETAIL (#) IF FIRE RATED PENETRATION.
2. THREADED, RIGID, OR IMC CONDUIT
3. SCREW ON BUSHING
4. WALL
5. REDUCING WASHER OR PLATE
6. SCREW ON LOCKING RINGS FRONT & BACK (TYP.)

1 - CONDUIT STUB PENETRATION DETAIL
SCALE: NONE

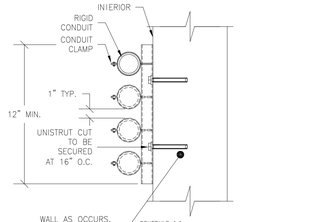

SCHEDULE 1.1

WALL TYPE	ANCHOR/FASTERNER	MIN. EMBED
WOOD	3/8"X2-1/2" LAG	1-1/2"
LIGHT GAUGE	#12X1-1/2" STS	N/A
CMU/MASONRY *	5/16" X 2-1/2"	1-1/2"

* EPOXY ANCHOR, WASHER AS REQ'D

2 - MULTIPLE VERTICAL CONDUIT SUPPORT DETAIL
SCALE: NONE

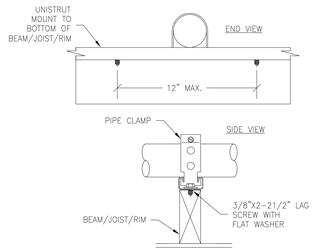

3 - CONDUIT MOUNTING ON ROOF BLOCKING
SCALE: NONE

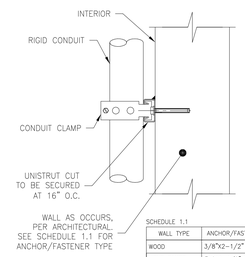

SCHEDULE 1.1

WALL TYPE	ANCHOR/FASTERNER	MIN. EMBED
WOOD	3/8"X2-1/2" LAG	1-1/2"
LIGHT GAUGE	#12X1-1/2" STS	N/A
CMU/MASONRY *	5/16" X 2-1/2"	1-1/2"

* EPOXY ANCHOR, WASHER AS REQ'D

4 - VERTICAL CONDUIT SUPPORT DETAIL
SCALE: NONE

els architecture+ urban design
2040 Addison St, Berkeley, CA 94704
510.549.2929 | elsarch.com

PROJECT:

PIEDMONT COMMUNITY POOL

777 MAGNOLIA AVENUE PIEDMONT, CA 94611

CLIENT:

CITY OF PIEDMONT

120 VISTA AVENUE PIEDMONT, CA 94611

PROJECT TEAM:

ARCHITECT:
ELS ARCHITECTURE AND URBAN DESIGN
2040 Addison Street
Berkeley, CA 94704
P: 510.549.2929

CIVIL ENGINEER:
BKF ENGINEERS
4670 Willow Road, Suite 250
Pleasanton, CA 94588
P: (925) 396-7704

LANDSCAPE ARCHITECT:
SWA
2200 Bridgeway
Sausalito, CA 94965
P: 415.332.5100

STRUCTURAL ENGINEER:
FORELL/ELSESSER ENGINEERS, INC.
160 Pine Street, 6th Floor
San Francisco, CA 94111
P: 415.837.0700

MEP / FIRE PROTECTION:
GUTTMANN & BLAEVOET
1620 Montgomery Street, Suite 230
San Francisco, CA 94111
P: 415.655.4000

AQUATICS:
AQUATICS DESIGN GROUP
2226 Faraday Avenue
Carlsbad, CA 92008
P: 760.438.8400

SPECIFICATIONS
TOPFLIGHT SPECS
49 Geary Street, Suite 230
San Francisco, CA 94108-5748
P: 415.546.6033

REVISION

NUMBER	DATE	DESCRIPTION

ISSUE:
100% DESIGN DEVELOPMENT

DATE:
APRIL 30, 2022

STAMP:

NOT FOR CONSTRUCTION

SHEET TITLE:
SECURITY DETAILS

SHEET NUMBER:
TS702

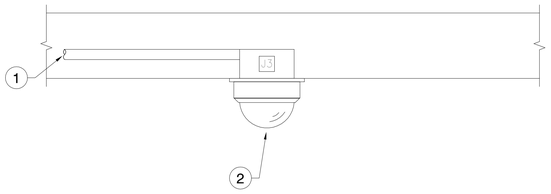

NOTES TO DETAIL:

1. ROUTE CONDUIT TO NEAREST CABLE TRAY OR HOME RUN TO NEAREST SECURITY RISER LOCATION (UNLESS NOTED OTHERWISE).

2. CCTV CAMERA, ENCLOSURE, MOUNT AND MOUNTING SUPPORT HARDWARE AS REQUIRED BY THE MANUFACTURER.

GENERAL NOTE:

A. DETAIL REPRESENTS TYPICAL REQUIREMENTS. SEE THE SECURITY PLANS AND SPECIFICATIONS FOR EXACT REQUIREMENTS AT EACH CAMERA.

B. REFERENCE SECURITY LEGEND FOR DEVICE CONDUIT AND BACKBOX REQUIREMENTS.

2 - INTERIOR CEILING FLUSH MOUNTED DOME CAMERA CONDUIT ROUGH-IN

SCALE: NONE

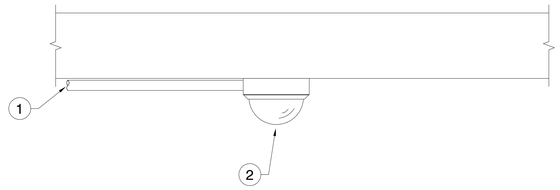

NOTES TO DETAIL:

1. ROUTE CONDUIT TO NEAREST CABLE TRAY OR HOME RUN TO NEAREST SECURITY RISER LOCATION (UNLESS NOTED OTHERWISE).

2. CCTV CAMERA, ENCLOSURE, MOUNT AND MOUNTING SUPPORT HARDWARE AS REQUIRED BY THE MANUFACTURER.

GENERAL NOTE:

A. DETAIL REPRESENTS TYPICAL REQUIREMENTS. SEE THE SECURITY PLANS AND SPECIFICATIONS FOR EXACT REQUIREMENTS AT EACH CAMERA.

B. REFERENCE SECURITY LEGEND FOR DEVICE CONDUIT AND BACKBOX REQUIREMENTS.

1 - EXTERIOR CEILING SURFACE MOUNTED DOME CAMERA CONDUIT ROUGH-IN

SCALE: NONE

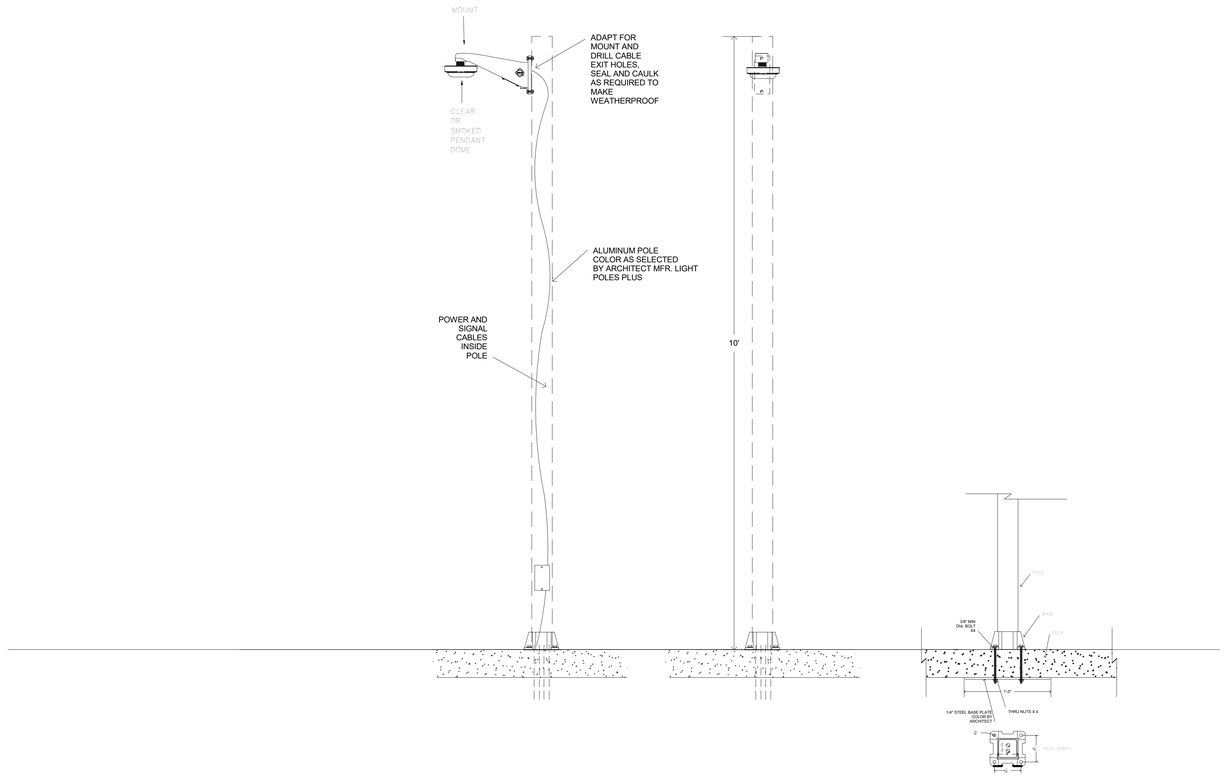

3 - EXTERIOR CEILING POLE MOUNTED MULTI VIEW CAMERA CONDUIT ROUGH-IN

SCALE: NONE

els architecture+ urban design
2040 Addison St, Berkeley, CA 94704
510.549.2929 | elsarch.com

PROJECT:

PIEDMONT COMMUNITY POOL

777 MAGNOLIA AVENUE PIEDMONT, CA 94611

CLIENT:

CITY OF PIEDMONT

120 VISTA AVENUE PIEDMONT, CA 94611

PROJECT TEAM:

ARCHITECT:
ELS ARCHITECTURE AND URBAN DESIGN
2040 Addison Street
Berkeley, CA 94704
P: 510.549.2929

CIVIL ENGINEER:
BKF ENGINEERS
4670 Willow Road, Suite 250
Pleasanton, CA 94588
P: (925) 396-7704

LANDSCAPE ARCHITECT:
SWA
2200 Bridgeway
Sausalito, CA 94965
P: 415.332.5100

STRUCTURAL ENGINEER:
FORELL/ELSESSER ENGINEERS, INC.
160 Pine Street, 6th Floor
San Francisco, CA 94111
P: 415.837.0700

MEP / FIRE PROTECTION:
GUTTMANN & BLAEVOET
1620 Montgomery Street, Suite 230
San Francisco, CA 94111
P: 415.655.4000

AQUATICS:
AQUATICS DESIGN GROUP
2226 Faraday Avenue
Carlsbad, CA 92008
P: 760.438.8400

SPECIFICATIONS
TOPFLIGHT SPECS
49 Geary Street, Suite 230
San Francisco, CA 94108-5748
P: 415.546.6033

REVISION

NUMBER	DATE	DESCRIPTION

ISSUE:
100% DESIGN DEVELOPMENT

DATE:
APRIL 30, 2022

STAMP:

NOT FOR CONSTRUCTION

SHEET TITLE:
SECURITY DETAILS

SHEET NUMBER:
TS703

DRAWING LIST

CONTRACTOR DESIGN REQUIREMENTS

CONTRACTOR DESIGN REQUIREMENTS ENGINEER OF RECORD ASSIGNMENT

THE FIRE ALARM SYSTEM SHALL MEET AND COMPLY WITH ALL NATIONAL AND LOCAL FIRE ALARM CODES. THE CONTRACTOR SHALL PROVIDE ALL ENGINEERING AND DESIGN SERVICES TO SUBMIT FULL WORKING DRAWINGS TO THE LOCAL OR DESIGNATED AHJ FOR DEFERRED APPROVALS. THE FIRE ALARM SYSTEM AS SHOWN IN DIAGRAMMATIC IN NATURE AND HAS NOT BEEN REVIEWED FOR CONFORMANCE TO CODES.

THE CONTRACTOR BY SUBMITTING DRAWINGS SHALL BECOME THE RECOGNIZED ENGINEER AND DESIGNER OF RECORD FOR THE ENTIRE FIRE ALARM DESIGN , LAYOUT, AND SUBSEQUENT APPROVALS.

ALL DRAWINGS SUBMITTED FOR DEFERRED APPROVALS SHALL BEAR THE CONTRACTORS NAME, LICENSE NUMBER, AND SHALL BE SIGNED BY A LICENSED ELECTRICAL OR FIRE PROTECTION ENGINEER , LICENSED IN THE STATE OF CALIFORNIA, WITH VALID AND CURRENT CERTIFICATION.

THE CONTRACTOR SHALL REVIEW ALL ARCHITECTURAL DRAWINGS, MECHANICAL AND PLUMBING DRAWINGS, ALONG WITH ELECTRICAL TO FORMULATE A DESIGN AND BY SUBMITTING BIDS , ACKNOWLEDGES THEIR ROLES AND RESPONSIBILITY FOR ENGINEERING DESIGN AND SUBSEQUENT APPROVALS FOR THE FIRE ALARM SYSTEM.

FIRE ALARM SYSTEM IS DEFERRED APPROVAL AND REQUIRES FULL DESIGN DRAWINGS, CALCULATIONS AND SUBMITTALS

SCOPE OF WORK

THE SCOPE OF THIS PROJECT IS TO PROVIDE A NEW ADDRESSABLE FIRE ALARM SYSTEM

THIS FIRE ALARM SYSTEM INCLUDES:

-MAIN FIRE ALARM CONTROL PANEL
-ADDRESSABLE SMOKE DETECTORS
-ADDRESSABLE MANUAL PULL STATIONS
-ADDRESSABLE DUCT SMOKE DETECTORS
-ADDRESSABLE CONTROL MODULES AND MONITOR MODULE FOR DUCT SMOKE
-ADDRESSABLE DETECTORS FOR HVAC FAN SHUTDOWN.
-AUDIBLE SPEAKER/VISUAL NOTIFICATION APPLIANCES
-NAC BOOSTER POWER SUPPLIES
-CONTROL MODULES FOR THE ACTIVATION OF FIRE SMOKE DAMPERS
-CONTROL, RELAY AND MONITORY MODULES FOR ELEVATOR CONTROL AND ASSOCIATED SHUNT TRIP SYSTEMS
-ADDRESSABLE MODULES FOR MONITORING SPRINKLER VALVE TAMPER, WATER FLOW AND PIV MONITORING

DEVICE IDENTIFICATION CHART

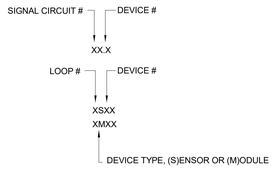

STYLE/CIRCUIT DESIGNATIONS

PER NFPA 72

NAC = STYLE Y (CLASS B)

SLC = STYLE 4 (CLASS B)

IDC = STYLE B (CLASS B)

GENERAL SYSTEM OPERATION

THE OPERATION OF A MANUAL PULL STATION, SMOKE DETECTOR, DUCT SMOKE DETECTOR, HEAT DETECTOR OR FLOW SWITCH SHALL CAUSE:

1. ALL AUDIBLE INDICATING APPLIANCES TO SOUND IN A TEMPORAL 3 CALIFORNIA CODE PATTERN, AND ALL STROBE LAMPS TO FLASH.

2. INDICATE WITHIN THE CONTROL PANEL THE ZONE OR DEVICE IN ALARM CONDITION OR ON ANY REMOTE (IF SHOWN) ANNUNCIATORS THE ZONE OR DEVICE IN ALARM CONDITION.

3. PERFORM ANY ADDITIONAL FUNCTION AS SPECIFIED HEREIN OR AS SHOWN ON THE PLANS.

4. SUMMON THE FIRE DEPARTMENT VIA TELEPHONE OR AUTO DIALER.

GENERAL SYSTEM OPERATION

1. WHEN THE OPERATED DEVICE IS RESTORED TO NORMAL, THE CONTROL PANEL SHALL BE MANUALLY RESET, EXCEPT THAT THE ALARMS MAY BE SILENCED AS DESCRIBED ELSEWHERE IN THESE SPECIFICATIONS.

2. AN ALARM SHALL BE SILENCED BY A SWITCH OR KEYPAD BUTTON LOCATED ON THE ALARMING ZONE CARD, IN THE CONTROL PANEL OR AT THE REMOTE ANNUNCIATOR. WHEN SILENCED, THIS SHALL NOT PREVENT THE RESOUNDING OF SUBSEQUENT ALARMS IF ANOTHER ZONE(S) SHOULD ALARM (SUBSEQUENT ALARM FEATURE).

3. WHEN ALARMS ARE SILENCED, THE ZONE INDICATING LED'S OR TEXT ON THE ANNUNCIATOR AT THE CONTROL PANEL OR ON ANY REMOTE ANNUNCIATORS, SHALL REMAIN LIT, UNTIL THE OPERATED DEVICE IS RETURNED TO NORMAL, AND THE CONTROL PANEL IS MANUALLY RESET.

TROUBLE OR SUPERVISORY CONDITIONS

1. WHEN THE SYSTEM DETECTS ANY OPENS, SHORTS, OR GROUNDS OF THE FIELD WIRING,OR LOSS OF AC SUPPLY POWER OR BATTERY TROUBLE, THE PANEL SHALL SOUND A TROUBLE ALARM AT THE PANEL AND REMOTE ANNUNCIATORS UNTIL ACKNOWLEDGED. A CORRESPONDING SIGNAL SHALL BE SENT TO THE 24 HOUR MONITORING STATION ANNUNCIATING THE CONDITION. RESTORATION OF THE SYSTEM SHALL CAUSE THE TROUBLE TO RESOUND INDICATING A RESTORAL AND RETURN THE PANEL TO NORMAL OPERATION.

2. WHEN THE SYSTEM DETECTS ANY SUPERVISORY CONDITIONS OF VALVES, TAMPERS, OPEN CIRCUITS OR GROUNDS IN ANY OF THE SUPERVISORY CIRCUITS, (I.E., GATE VALVES, SUPPLY SHUT OFF VALVES, POST INDICATOR VALVES, ETC.) THE PANEL SHALL SOUND A TROUBLE ALARM AT THE PANEL AND REMOTE ANNUNCIATORS. A CORRESPONDING SIGNAL SHALL BE SENT TO THE 24 HOUR MONITORING STATION ANNUNCIATING THE CONDITION.

REMOTE SUPERVISING STATION

AUTOMATIC FIRE ALARM SYSTEMS SHALL TRANSMIT THE ALARM, SUPERVISORY AND TROUBLE SIGNALS TO CALIFORNIA SECURITY UL#S3537 SUPERVISING STATION AS REQUIRED BY NFPA 72, AS AMENDED BY ARTICLE 91. THE SUPERVISORY STATION SHALL BE LISTED AS EITHER UUFX OR UUJS BY UNDERWRITER LABORATORY OR SHALL MEET THE REQUIREMENTS OF FACTORY MUTUAL RESEARCH APPROVAL STANDARD 3011.

FIRE ALARM SYSTEM LEGEND/SYMBOLS

SYMBOL	DESCRIPTION	MODEL #	CSFM #	BACK BOX	MANUFACTURER
FACP	FIRE ALARM CONTROL PANEL W WITH LTE MODEM/DIALER INTERFACE				
FAAN	FIRE ALARM REMOTE ANNUNCIATOR VP INDICATES VOICE ANNOUNCE PANEL/ANNUNCIATOR				
C	CONTROL / RELAY				
M	MONITOR MODULES				
?	CEILING MOUNTED FIRE ALARM SMOKE DETECTOR DETECTOR BASE				
?	HVAC DUCT SMOKE DETECTOR AND HOUSING				
WF	FIRE ALARM WATER FLOW WITH ADDRESSABLE MINI-MODULE FMM-101				
VT	FIRE ALARM VALVE TAMPER WITH ADDRESSABLE MINI-MODULE FMM-101				
PIV	FIRE ALARM POST INDICATOR VALVE WITH ADDRESSABLE MINI-MODULE FMM-101				
FATC	FIRE ALARM TERMINAL CABINET				COOPER B-LINE
XXX	FIRE ALARM STROBE 15cd,30cd,75cd,110cd			4x4x2$\frac{1}{2}$", SINGLE GANG, DOUBLE GANG, 4"OCTAGON	SYSTEM SENSOR
XX	FIRE ALARM COMBO SPEAKER/STROBE 15cd,30cd,60cd,110cd			4x4x2$\frac{1}{2}$", SINGLE GANG, DOUBLE GANG, 4"OCTAGON	SYSTEM SENSOR
XX WP	WEATHERPROOF SPEAKER / STROBE WITH LISTED WEATHERPROOF BACK BOX			4x4x2$\frac{1}{2}$", SINGLE GANG, DOUBLE GANG, 4"OCTAGON	SYSTEM SENSOR

(ALL INITIATION DEVICES ARE ADDRESSABLE U.O.N.)

AUDIBILITY DESIGN CRITERIA

AUDIBLE FIRE ALARM SOUND LEVEL SHALL BE AT LEAST 15 dBA ABOVE THE AVERAGE AMBIENT SOUND LEVEL IN ALL OCCUPIABLE AREAS.

CALIFORNIA BUILDING CODE, SECTION 3501.1: AUDIBLE SIGNAL INTENDED FOR OPERATION IN PRIVATE MODE SHOULD HAVE A SOUND LEVEL OF NOT LESS THAN 65 dBA AT 10 FEET OR MORE THAN 110 dBA AT MINIMUM HEARING DISTANCE FROM AUDIBLE APPLIANCE.

PROVIDE TEMPORAL 3 TONE WITH VOICE ANNUNCIATION ALARM SIGNALING

APPLICABLE CODES

CBC (PART 2, TITLE-24)

CEC (PART 3, TITLE-24):

CMC (PART 4, TITLE-24):

CFC (PART 9, TITLE-24):

CA REFERENCED STANDARDS CODE (PART 12, TITLE-24):
2016 UBC STANDARDS WITH CA AMENDMENTS.

PUBLIC SAFETY (TITLE-19), STATE FIRE MARSHAL.

NFPA 72, NATIONAL FIRE ALARM CODE, 2016 EDITION WITH CALIFORNIA AMENDMENTS.

SYSTEM DESCRIPTION

THE WORK INVOLVED UNDER THIS CONTRACT IS A NEW MANUAL AND PARTIAL AUTOMATIC ADDRESSABLE TYPE FIRE ALARM SYSTEM COMPRISED OF MANUAL PULL STATIONS, DUCT DETECTORS ON HVAC EQUIPMENT, WATER FLOW DEVICES, TAMPER DEVICES FOR INITIATION. THE SIGNALING SYSTEM IS COMPRISED OF SPEAKER, SPEAKER/STROBES AND STROBES. THE SYSTEM SHALL BE A 24 HOUR MONITORED BY AN APPROVED U.L. AGENCY.

THE NEW SYSTEM IS ADDRESSABLE WIRED CLASS "B" 2-WIRE TYPE, PARTIAL COVERAGE AUTOMATIC MONITORING FIRE ALARM SYSTEM CONSISTING OF SMOKE DETECTORS, HEAT DETECTORS, AS SHOWN ON THE PLANS. SMOKE DETECTORS ARE SHOWN IN PANEL ROOMS WHERE ACTIVE FIRE ALARM EQUIPMENT IS LOCATED, I.E. NAC BOOSTER PANELS AND EXISTS AT THE MAIN FACP.

SIGNALING DEVICES CONSISTING OF NEW CHIMES, CHIME/STROBES AND STROBES ARE SHOWN ON THE PLANS AND CONNECTED CLASS "B" 2-WIRE AS INDICATED TO THE CIRCUITS AS INDICATED.

THE FIRE ALARM PANELS AND NEW NAC BOOSTER PANEL SHALL BE INSTALLED WITH A DEDICATED 120VAC POWER CIRCUIT WITH A LOCK OUT DEVICES AND LABELED "FIRE ALARM" DO NOT SHUT OFF. THE LOCK OUT DEVICE SHALL BE RED IN COLOR. NAC PANELS SHALL BE CONNECTED TO LOCAL POWER IN THE SAME MANNER AS THE MAIN FACU.

THE SYSTEM SHALL BE CENTRAL STATION MONITORED OFF SITE

THE FIRE ALARM SYSTEM SHALL MEET AND COMPLY WITH ALL NATIONAL, STATE AND LOCAL FIRE ALARM CODES. THE CONTRACTOR SHALL PROVIDE, DESIGN AND SUBMIT FULL WORKING DRAWINGS TO THE LOCAL OR DESIGNATED AHJ FOR APPROVAL

els architecture+ urban design
2040 Addison St, Berkeley, CA 94704
510.549.2929 | elsarch.com

PROJECT:

PIEDMONT COMMUNITY POOL

777 MAGNOLIA AVENUE PIEDMONT, CA 94611

CLIENT:

CITY OF PIEDMONT

120 VISTA AVENUE PIEDMONT, CA 94611

PROJECT TEAM:

ARCHITECT:
ELS ARCHITECTURE AND URBAN DESIGN
2040 Addison Street
Berkeley, CA 94704
P: 510.549.2929

CIVIL ENGINEER:
BKF ENGINEERS
4670 Willow Road, Suite 250
Pleasanton, CA 94588
P: (925) 396-7704

LANDSCAPE ARCHITECT:
SWA
2200 Bridgeway
Sausalito, CA 94965
P: 415.332.5100

STRUCTURAL ENGINEER:
FORELL/ELSESSER ENGINEERS, INC.
160 Pine Street, 6th Floor
San Francisco, CA 94111
P: 415.837.0700

MEP / FIRE PROTECTION:
GUTTMANN & BLAEVOET
1620 Montgomery Street, Suite 230
San Francisco, CA 94111
P: 415.655.4000

AQUATICS:
AQUATICS DESIGN GROUP
2226 Faraday Avenue
Carlsbad, CA 92008
P: 760.438.8400

SPECIFICATIONS
TOPFLIGHT SPECS
49 Geary Street, Suite 230
San Francisco, CA 94108-5748
P: 415.546.6033

REVISION

NUMBER	DATE	DESCRIPTION

ISSUE:
100% DESIGN DEVELOPMENT

DATE:
APRIL 30, 2022

STAMP:

NOT FOR CONSTRUCTION

SHEET TITLE:

SYMBOLS, ABBREVIATIONS, GENERAL NOTES AND DRAWING LIST

SHEET NUMBER:

FA001

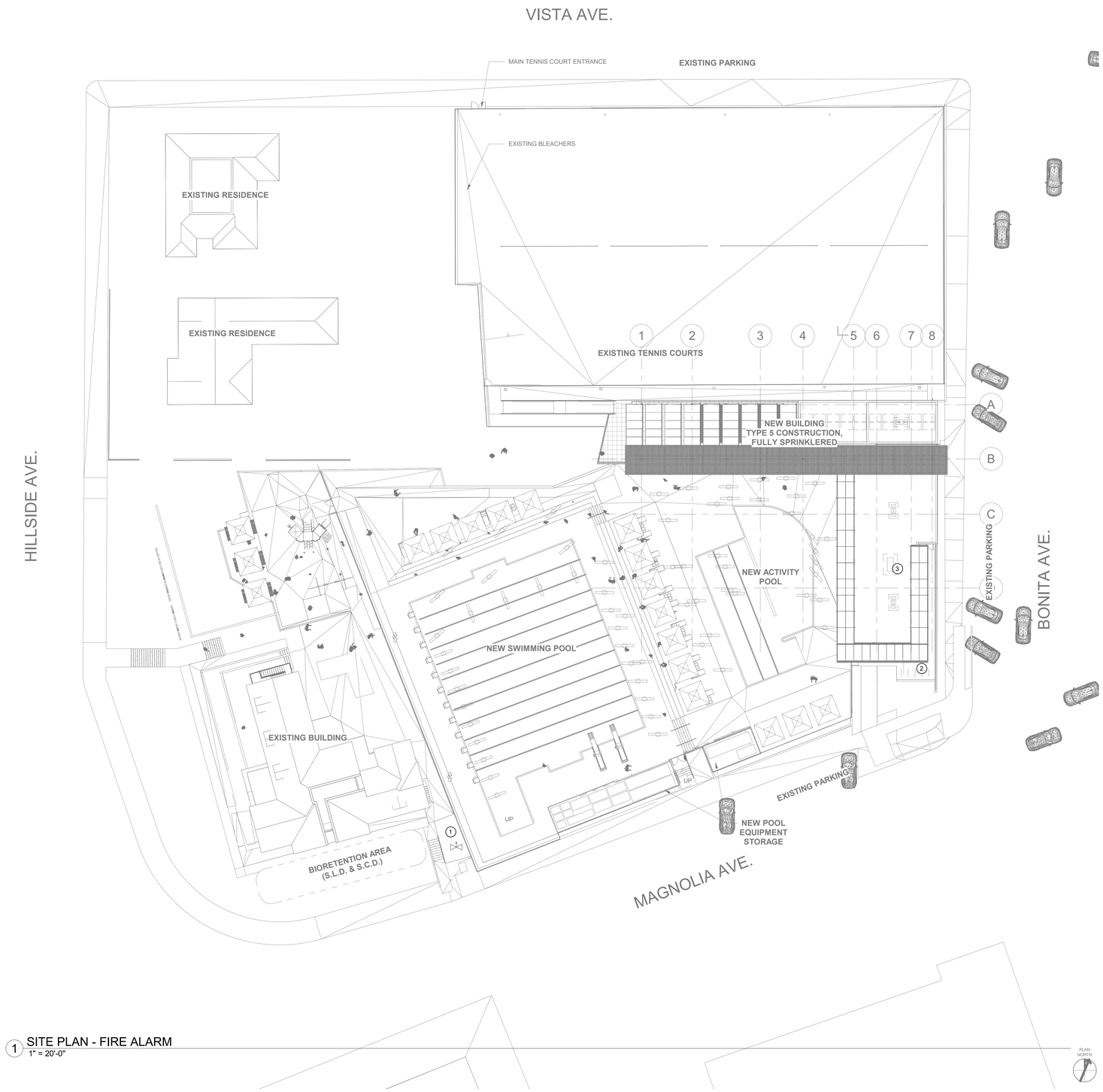

1 SITE PLAN - FIRE ALARM
1" = 20'-0"

GENERAL NOTES

SHEET NOTES

1. APPROXIMATE LOCATION OF PIV/BFP MONITORING CONNECTION, INSTALL 1" CONDUIT BACK TO FIRE RISER ROOM AND CONNECT TO ADDRESSABLE MODULE IN FIRE RISER ROOM
2. FIRE RISER ROOM WITH FLOW AND TAMPER CONNECTIONS, INSTALL ADDRESSABLE MODULES FOR MONITORING SPRINKLER SYSTEM IN THIS ROOM
3. APPROXIMATE LOCATION OF FACP AND VOICE PANEL IN ELECTRICAL ROOM

LEGEND

els architecture+ urban design
2040 Addison St, Berkeley, CA 94704
510.549.2929 | elsarch.com

PROJECT:

PIEDMONT COMMUNITY POOL

777 MAGNOLIA AVENUE PIEDMONT, CA 94611

CLIENT:

CITY OF PIEDMONT

120 VISTA AVENUE PIEDMONT, CA 94611

PROJECT TEAM:

ARCHITECT:
ELS ARCHITECTURE AND URBAN DESIGN
2040 Addison Street
Berkeley, CA 94704
P: 510.549.2929

CIVIL ENGINEER:
BKF ENGINEERS
4670 Willow Road, Suite 250
Pleasanton, CA 94588
P: (925) 396-7704

LANDSCAPE ARCHITECT:
SWA
2200 Bridgeway
Sausalito, CA 94965
P: 415.332.5100

STRUCTURAL ENGINEER:
FORELL/ELSESSER ENGINEERS, INC.
160 Pine Street, 6th Floor
San Francisco, CA 94111
P: 415.837.0700

MEP / FIRE PROTECTION:
GUTTMANN & BLAEVOET
1620 Montgomery Street, Suite 230
San Francisco, CA 94111
P: 415.655.4000

AQUATICS:
AQUATICS DESIGN GROUP
2226 Faraday Avenue
Carlsbad, CA 92008
P: 760.438.8400

SPECIFICATIONS
TOPFLIGHT SPECS
49 Geary Street, Suite 230
San Francisco, CA 94108-5748
P: 415.546.6033

REVISION

NUMBER	DATE	DESCRIPTION

ISSUE:
100% DESIGN DEVELOPMENT

DATE:
APRIL 30, 2022

STAMP:

NOT FOR CONSTRUCTION

SHEET TITLE:
SITE PLAN - FIRE ALARM

SHEET NUMBER:

FA101

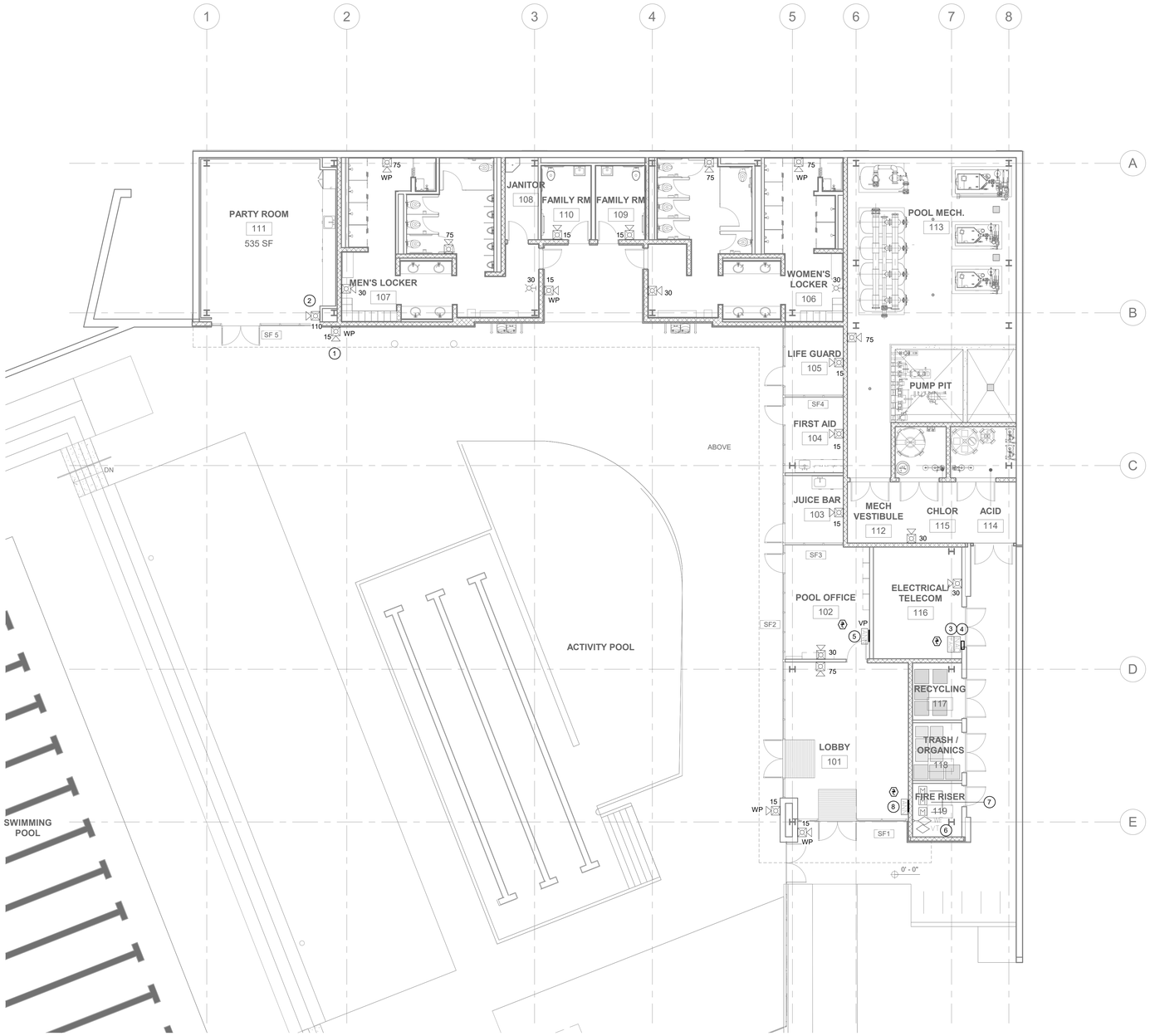

1 FLOOR PLAN - LEVEL 1 - FIRE ALARM
1/8" = 1'-0"

KEYNOTES

1. TYPICAL OUTDOOR WEATHERPROOF FIRE ALARM SPEAKER STROBE
2. TYPICAL INDOOR FIRE ALARM SPEAKER STROBE
3. NEW FIRE ALARM PANEL WITH VOICE EVAC AND LTE DIALER, CONNECT TO DEDICATED 120VAC CKT.
4. NEW NAC PANEL FOR STROBE AND SIGNAL CIRCUITS
5. NEW REMOTE ANNUNCIATOR WITH VOICE MIC
6. TYPICAL CONNECTIONS FOR WATER FLOW AND TAMPER SWITCHES BY SPRINKLER CONTRACTOR
7. NEW MONITOR MODULES FOR WATER FLOW, TAMPER CONNECTIONS
8. NEW REMOTE ANNUNCIATOR DISPLAY

GENERAL NOTES

els architecture+ urban design
2040 Addison St, Berkeley, CA 94704
510.549.2929 | elsarch.com

PROJECT:

PIEDMONT COMMUNITY POOL

777 MAGNOLIA AVENUE PIEDMONT, CA 94611

CLIENT:

CITY OF PIEDMONT

120 VISTA AVENUE PIEDMONT, CA 94611

PROJECT TEAM:

ARCHITECT:
ELS ARCHITECTURE AND URBAN DESIGN
2040 Addison Street
Berkeley, CA 94704
P: 510.549.2929

CIVIL ENGINEER:
BKF ENGINEERS
4670 Willow Road, Suite 250
Pleasanton, CA 94588
P: (925) 396-7704

LANDSCAPE ARCHITECT:
SWA
2200 Bridgeway
Sausalito, CA 94965
P: 415.332.5100

STRUCTURAL ENGINEER:
FORELL/ELSESSER ENGINEERS, INC.
160 Pine Street, 6th Floor
San Francisco, CA 94111
P: 415.837.0700

MEP / FIRE PROTECTION:
GUTTMANN & BLAEVOET
1620 Montgomery Street, Suite 230
San Francisco, CA 94111
P: 415.655.4000

AQUATICS:
AQUATICS DESIGN GROUP
2226 Faraday Avenue
Carlsbad, CA 92008
P: 760.438.8400

SPECIFICATIONS
TOPFLIGHT SPECS
49 Geary Street, Suite 230
San Francisco, CA 94108-5748
P: 415.546.6033

REVISION

NUMBER	DATE	DESCRIPTION

ISSUE:
100% DESIGN DEVELOPMENT

DATE:
APRIL 30, 2022

STAMP:

NOT FOR CONSTRUCTION

SHEET TITLE:
FLOOR PLAN - LEVEL 1 - FIRE ALARM

SHEET NUMBER:
FA201

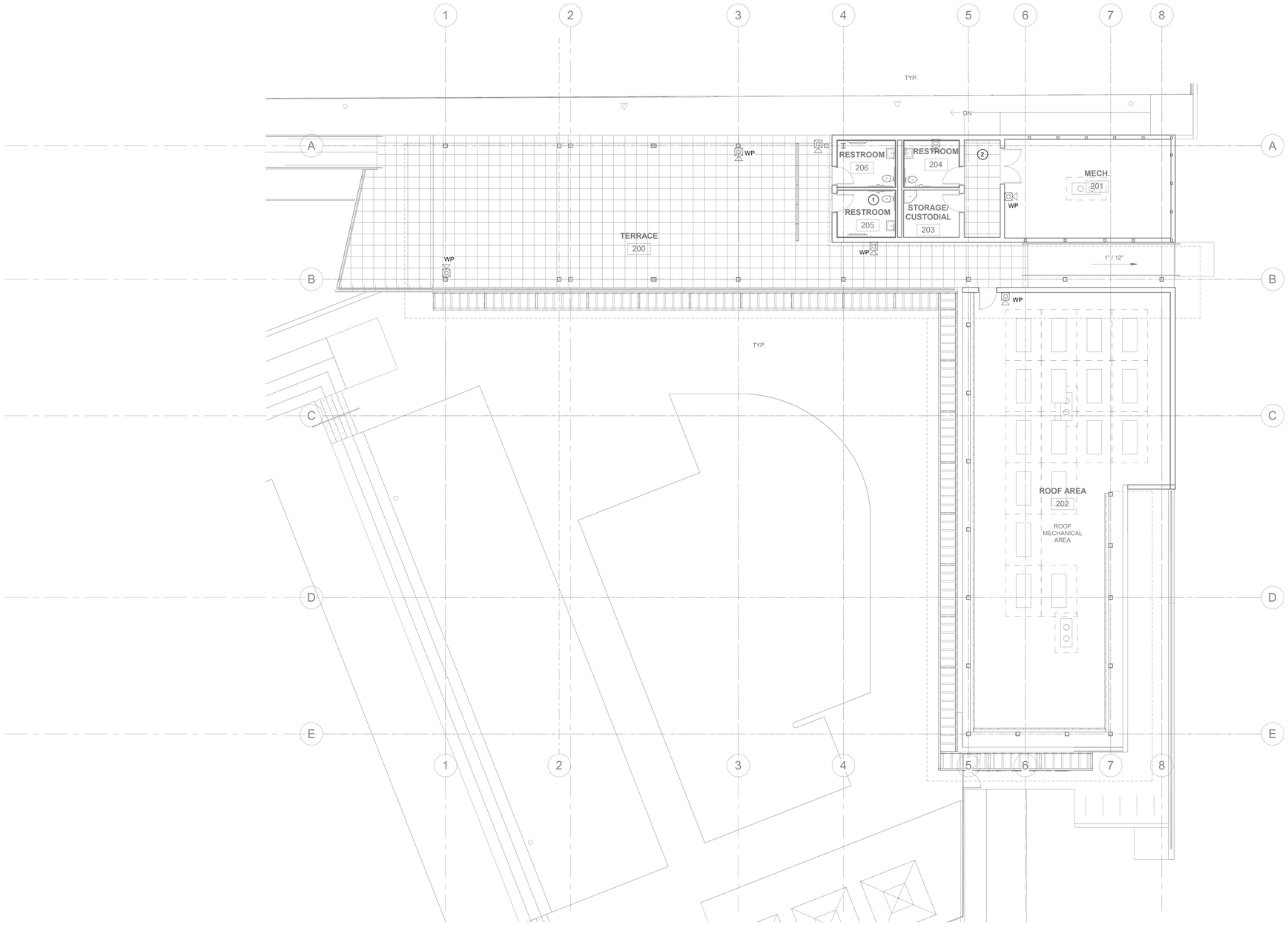

1 HIGH ROOF PLAN - FIRE ALARM
1/8" = 1'-0"

KEYNOTES

1. TYPICAL OUTDOOR WEATHERPROOF FIRE ALARM SPEAKER STROBE
2. TYPICAL INDOOR FIRE ALARM SPEAKER STROBE

GENERAL NOTES

els architecture+ urban design
2040 Addison St, Berkeley, CA 94704
510.549.2929 | elsarch.com

PROJECT:

PIEDMONT COMMUNITY POOL

777 MAGNOLIA AVENUE PIEDMONT, CA 94611

CLIENT:

CITY OF PIEDMONT

120 VISTA AVENUE PIEDMONT, CA 94611

PROJECT TEAM:

ARCHITECT:
ELS ARCHITECTURE AND URBAN DESIGN
2040 Addison Street
Berkeley, CA 94704
P: 510.549.2929

CIVIL ENGINEER:
BKF ENGINEERS
4670 Willow Road, Suite 250
Pleasanton, CA 94588
P: (925) 396-7704

LANDSCAPE ARCHITECT:
SWA
2200 Bridgeway
Sausalito, CA 94965
P: 415.332.5100

STRUCTURAL ENGINEER:
FORELL/ELSESSER ENGINEERS, INC.
160 Pine Street, 6th Floor
San Francisco, CA 94111
P: 415.837.0700

MEP / FIRE PROTECTION:
GUTTMANN & BLAEVOET
1620 Montgomery Street, Suite 230
San Francisco, CA 94111
P: 415.655.4000

AQUATICS:
AQUATICS DESIGN GROUP
2226 Faraday Avenue
Carlsbad, CA 92008
P: 760.438.8400

SPECIFICATIONS
TOPFLIGHT SPECS
49 Geary Street, Suite 230
San Francisco, CA 94108-5748
P: 415.546.6033

REVISION

NUMBER	DATE	DESCRIPTION

ISSUE:
100% DESIGN DEVELOPMENT

DATE:
APRIL 30, 2022

STAMP:

NOT FOR CONSTRUCTION

SHEET TITLE:

ROOF PLAN - FIRE ALARM

SHEET NUMBER:

FA205

FIRE ALARM SEQUENCE OF OPERATION

ALARM / SUPV. DEVICES		AT FACP			AT REMOTE ANNUNCIATOR			AT OFF SITE MONITORING			ACTIVATES HORNS AND VISUAL DEVICES	HVAC UNIT SHUT DOWN	DUCT DETECTOR REMOTE ANNC.	TRANSFERS TO STANDBY BATTERIES
		DISPLAYS ALARM	SUPERVISORY INDICATION	TROUBLE INDICATION	DISPLAYS ALARM	SUPERVISORY INDICATION	TROUBLE INDICATION	DISPLAYS ALARM	SUPERVISORY INDICATION	TROUBLE INDICATION				
AREA SMOKE DETECTORS	ALARM	YES	NO	NO	YES	NO	NO	YES	NO	NO	YES	NO	NO	NO
	TROUBLE	NO	NO	YES	NO	NO	YES	NO	NO	YES	NO	NO	NO	NO
AC POWER FAIL														
	TROUBLE	NO	NO	YES	NO	NO	YES	NO	NO	YES	NO	NO	NO	YES
LOW BATTERY														
	TROUBLE	NO	NO	YES	NO	NO	YES	NO	NO	YES	NO	NO	NO	NO
DACT COMMUNICATION FAILURE														
	TROUBLE	NO	NO	YES	NO	NO	YES	NO	NO	AT RESTORAL	NO	NO	NO	NO
FACP SMOKE DETECTOR	ALARM	YES	NO	NO	YES	NO	NO	YES	NO	NO	YES	NO	NO	NO
	TROUBLE	NO	NO	YES	NO	NO	YES	NO	NO	YES	NO	NO	NO	NO
DUCT SMOKE DETECTORS HVAC	ALARM	YES	NO	NO	YES	NO	NO	YES	NO	NO	YES	YES	YES	NO
	TROUBLE	NO	NO	YES	NO	NO	YES	NO	NO	YES	NO	YES	NO	NO
WATER FLOW SWITCH	ALARM	YES	NO	NO	YES	NO	NO	YES	NO	NO	YES	NO	NO	NO
	TROUBLE	NO	NO	YES	NO	NO	YES	NO	NO	YES	NO	NO	NO	NO
TAMPER SWITCH VALVE	ALARM	NO	NO	NO	NO	NO	NO	NO	NO	NO	NO	NO	NO	NO
	TROUBLE	NO	YES	YES	NO	YES	YES	NO	YES	YES	NO	NO	NO	NO
CONTROL MODULE FOR HVAC SHUT DOWN	ALARM	NO	YES	NO	NO	YES	NO	NO	YES	NO	NO	YES	NO	NO
	TROUBLE	NO	NO	YES	NO	NO	YES	NO	NO	YES	NO	NO	NO	NO
CONTROL MODULE FOR F/S DAMPER CLOSURE	ALARM	NO	YES	NO	NO	YES	NO	NO	YES	NO	NO	NO	NO	NO
	TROUBLE	NO	NO	YES	NO	NO	YES	NO	NO	YES	NO	NO	NO	NO
PIV TAMPER SWITCH	ALARM	NO	NO	NO	NO	NO	NO	NO	NO	NO	NO	NO	NO	NO
	TROUBLE	NO	YES	YES	NO	YES	YES	NO	YES	YES	NO	NO	NO	NO
INITIATING CKTS (CLASS B)														
- OPEN WIRE	ALARM	NO	NO	NO	NO	NO	NO	NO	NO	NO	NO	NO	NO	NO
	TROUBLE	NO	NO	YES	NO	NO	YES	NO	NO	YES	NO	NO	NO	NO
- GROUNDED WIRE	ALARM	NO	NO	NO	NO	NO	NO	NO	NO	NO	NO	NO	NO	NO
	TROUBLE	NO	NO	YES	NO	NO	YES	NO	NO	YES	NO	NO	NO	NO
- SHORTED WIRES	ALARM	NO	NO	NO	NO	NO	NO	NO	NO	NO	NO	NO	NO	NO
	TROUBLE	NO	NO	YES	NO	NO	YES	NO	NO	YES	NO	NO	NO	NO
NOTIFICATION CKTS (CLASS B)														
- OPEN WIRE	ALARM	NO	NO	NO	NO	NO	NO	NO	NO	NO	NO	NO	NO	NO
	TROUBLE	NO	NO	YES	NO	NO	YES	NO	NO	YES	NO	NO	NO	NO
- GROUNDED WIRE	ALARM	NO	NO	NO	NO	NO	NO	NO	NO	NO	NO	NO	NO	NO
	TROUBLE	NO	NO	YES	NO	NO	YES	NO	NO	YES	NO	NO	NO	NO
- SHORTED WIRES	ALARM	NO	NO	NO	NO	NO	NO	NO	NO	NO	NO	NO	NO	NO
	TROUBLE	NO	NO	YES	NO	NO	YES	NO	NO	YES	NO	NO	NO	NO
SIGNALING LINE CKTS (CLASS B)														
- OPEN WIRE	ALARM	NO	NO	NO	NO	NO	NO	NO	NO	NO	NO	NO	NO	NO
	TROUBLE	NO	NO	YES	NO	NO	YES	NO	NO	YES	NO	NO	NO	NO
- GROUNDED WIRE	ALARM	NO	NO	NO	NO	NO	NO	NO	NO	NO	NO	NO	NO	NO
	TROUBLE	NO	NO	YES	NO	NO	YES	NO	NO	YES	NO	NO	NO	NO
- WIRE TO WIRE SHORT & OPEN	ALARM	NO	NO	NO	NO	NO	NO	NO	NO	NO	NO	NO	NO	NO
	TROUBLE	NO	NO	YES	NO	NO	YES	NO	NO	YES	NO	NO	NO	NO
- WIRE TO WIRE SHORT & GROUND	ALARM	NO	NO	NO	NO	NO	NO	NO	NO	NO	NO	NO	NO	NO
	TROUBLE	NO	NO	YES	NO	NO	YES	NO	NO	YES	NO	NO	NO	NO
- OPEN & GROUND	ALARM	NO	NO	NO	NO	NO	NO	NO	NO	NO	NO	NO	NO	NO
	TROUBLE	NO	NO	YES	NO	NO	YES	NO	NO	YES	NO	NO	NO	NO

2 TYPICAL SEQUENCE OF OPERATION

NO SCALE

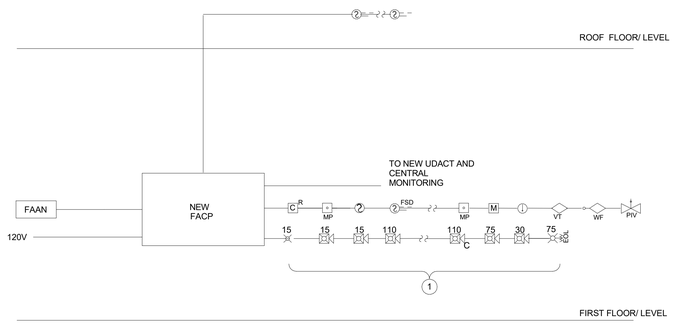

1 TYPICAL DEVICES . REFER TO FLOOR PLANS FOR LOCATION AND QUANTITY, (ALL DEVICE TYPES NOT SHOWN, REFER TO FLOOR PLANS).

1 TYPICAL FIRE ALARM BLOCK RISER DIAGRAM

NO SCALE

els architecture+ urban design
2040 Addison St, Berkeley, CA 94704
510.549.2929 | elsarch.com

PROJECT:

PIEDMONT COMMUNITY POOL

777 MAGNOLIA AVENUE PIEDMONT, CA 94611

CLIENT:

CITY OF PIEDMONT

120 VISTA AVENUE PIEDMONT, CA 94611

PROJECT TEAM:

ARCHITECT:
ELS ARCHITECTURE AND URBAN DESIGN
2040 Addison Street
Berkeley, CA 94704
P: 510.549.2929

CIVIL ENGINEER:
BKF ENGINEERS
4670 Willow Road, Suite 250
Pleasanton, CA 94588
P: (925) 396-7704

LANDSCAPE ARCHITECT:
SWA
2200 Bridgeway
Sausalito, CA 94965
P: 415.332.5100

STRUCTURAL ENGINEER:
FORELL/ELSESSER ENGINEERS, INC.
160 Pine Street, 6th Floor
San Francisco, CA 94111
P: 415.837.0700

MEP / FIRE PROTECTION:
GUTTMANN & BLAEVOET
1620 Montgomery Street, Suite 230
San Francisco, CA 94111
P: 415.655.4000

AQUATICS:
AQUATICS DESIGN GROUP
2226 Faraday Avenue
Carlsbad, CA 92008
P: 760.438.8400

SPECIFICATIONS
TOPFLIGHT SPECS
49 Geary Street, Suite 230
San Francisco, CA 94108-5748
P: 415.546.6033

REVISION

NUMBER	DATE	DESCRIPTION

ISSUE:
100% DESIGN DEVELOPMENT

DATE:
APRIL 30, 2022

STAMP:

NOT FOR CONSTRUCTION

SHEET TITLE:

FIRE ALARM RISER DIAGRAM

SHEET NUMBER:

FA501

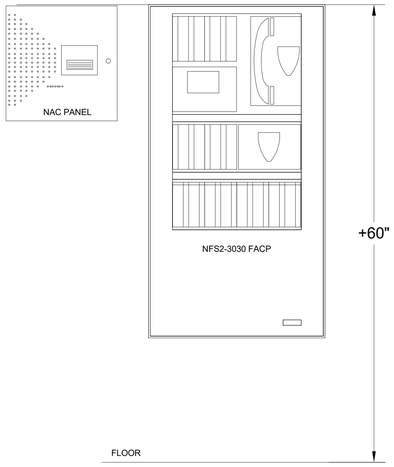

10 TYPICAL FIRE ALARM PANEL - MOUNTING HEIGHT ELEVATION

NO SCALE

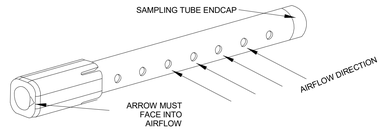

7 TYPICAL SAMPLING TUBE AIRFLOW DETAIL

NO SCALE

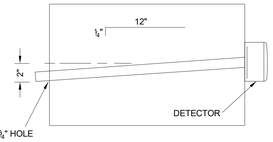

4 TYPICAL SAMPLING TUBE DEFLECTION DETAIL

NO SCALE

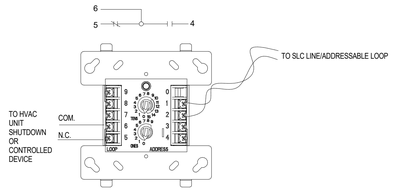

(TYPICAL ADDRESSABLE RELAY)

1 TYPICAL HVAC/FAN/DAMPER RELAY CONTROL WIRING

NO SCALE

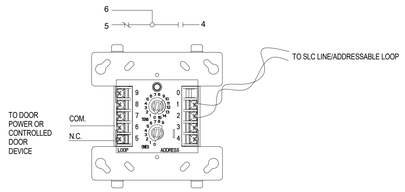

(TYPICAL ADDRESSABLE RELAY)

11 TYPICAL ELEVATOR LOBBY DOOR RELAY INTERFACE CONTROL WIRING

NO SCALE

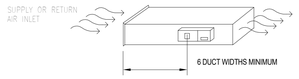

8 TYPICAL DUCT DETECTOR PLACEMENT - STRAIGHT DUCT

NO SCALE

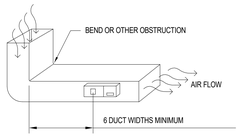

5 TYPICAL DUCT DETECTOR PLACEMENT - BEND IN DUCT

NO SCALE

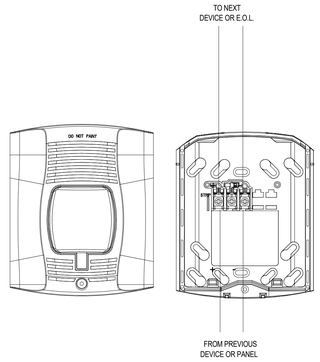

2 TYPICAL STROBE ONLY WIRING DETAIL

NO SCALE

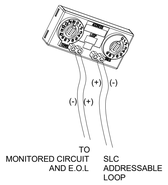

9 TYPICAL MINI MODULE WIRING DETAIL

NO SCALE

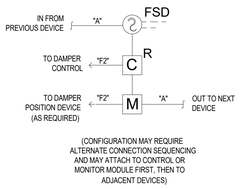

(CONFIGURATION MAY REQUIRE ALTERNATE CONNECTION SEQUENCING AND MAY ATTACH TO CONTROL OR MONITOR MODULE FIRST, THEN TO ADJACENT DEVICES)

6 TYPICAL DUCT FIRE SMOKE DAMPER - BLOCK DIAGRAM

NO SCALE

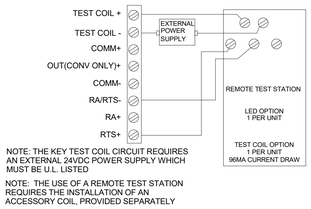

NOTE: THE KEY TEST COIL CIRCUIT REQUIRES AN EXTERNAL 24VDC POWER SUPPLY WHICH MUST BE U.L. LISTED

NOTE: THE USE OF A REMOTE TEST STATION REQUIRES THE INSTALLATION OF AN ACCESSORY COIL, PROVIDED SEPARATELY

3 TYPICAL REMOTE TEST STATION CONNECTION DETAIL

NO SCALE

els architecture+ urban design
2040 Addison St, Berkeley, CA 94704
510.549.2929 | elsarch.com

PROJECT:

PIEDMONT COMMUNITY POOL

777 MAGNOLIA AVENUE PIEDMONT, CA 94611

CLIENT:

CITY OF PIEDMONT

120 VISTA AVENUE PIEDMONT, CA 94611

PROJECT TEAM:

ARCHITECT:
ELS ARCHITECTURE AND URBAN DESIGN
2040 Addison Street
Berkeley, CA 94704
P: 510.549.2929

CIVIL ENGINEER:
BKF ENGINEERS
4670 Willow Road, Suite 250
Pleasanton, CA 94588
P: (925) 396-7704

LANDSCAPE ARCHITECT:
SWA
2200 Bridgeway
Sausalito, CA 94965
P: 415.332.5100

STRUCTURAL ENGINEER:
FORELL/ELSESSER ENGINEERS, INC.
160 Pine Street, 6th Floor
San Francisco, CA 94111
P: 415.837.0700

MEP / FIRE PROTECTION:
GUTTMANN & BLAEVOET
1620 Montgomery Street, Suite 230
San Francisco, CA 94111
P: 415.655.4000

AQUATICS:
AQUATICS DESIGN GROUP
2226 Faraday Avenue
Carlsbad, CA 92008
P: 760.438.8400

SPECIFICATIONS
TOPFLIGHT SPECS
49 Geary Street, Suite 230
San Francisco, CA 94108-5748
P: 415.546.6033

REVISION

NUMBER	DATE	DESCRIPTION

ISSUE:
100% DESIGN DEVELOPMENT

DATE:
APRIL 30, 2022

STAMP:

NOT FOR CONSTRUCTION

SHEET TITLE:

FIRE ALARM DETAILS

SHEET NUMBER:

FA701

SIGNALING LINE (ADDRESSABLE) CIRCUITS SHIELDING EXAMPLE

UL LISTED FIRE PROTECTIVE SIGNALING CABLES MAY BE SELECTED FROM THE WIRE & CABLE TABLE, #WIRE TABLE

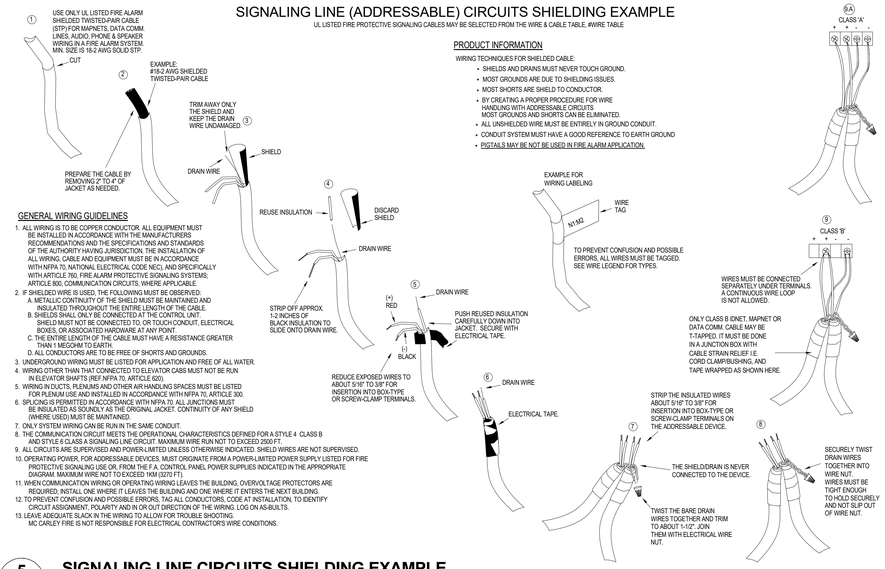

PRODUCT INFORMATION

WIRING TECHNIQUES FOR SHIELDED CABLE:

- SHIELDS AND DRAINS MUST NEVER TOUCH GROUND.
- MOST GROUNDS ARE DUE TO SHIELDING ISSUES.
- MOST SHORTS ARE SHIELD TO CONDUCTOR.
- BY CREATING A PROPER PROCEDURE FOR WIRE HANDLING WITH ADDRESSABLE CIRCUITS MOST GROUNDS AND SHORTS CAN BE ELIMINATED.
- ALL UNSHIELDED WIRE MUST BE ENTIRELY IN GROUND CONDUIT.
- CONDUIT SYSTEM MUST HAVE A GOOD REFERENCE TO EARTH GROUND
- PIGTAILS MAY BE NOT BE USED IN FIRE ALARM APPLICATION.

GENERAL WIRING GUIDELINES

1. ALL WIRING IS TO BE COPPER CONDUCTOR. ALL EQUIPMENT MUST BE INSTALLED IN ACCORDANCE WITH THE MANUFACTURERS RECOMMENDATIONS AND THE SPECIFICATIONS AND STANDARDS OF THE AUTHORITY HAVING JURISDICTION. THE INSTALLATION OF ALL WIRING, CABLE AND EQUIPMENT MUST BE IN ACCORDANCE WITH NFPA 70, NATIONAL ELECTRICAL CODE NEC), AND SPECIFICALLY WITH ARTICLE 760, FIRE ALARM PROTECTIVE SIGNALING SYSTEMS; ARTICLE 800, COMMUNICATION CIRCUITS, WHERE APPLICABLE.
2. IF SHIELDED WIRE IS USED, THE FOLLOWING MUST BE OBSERVED:
   A. METALLIC CONTINUITY OF THE SHIELD MUST BE MAINTAINED AND INSULATED THROUGHOUT THE ENTIRE LENGTH OF THE CABLE.
   B. SHIELDS SHALL ONLY BE CONNECTED AT THE CONTROL UNIT. SHIELD MUST NOT BE CONNECTED TO, OR TOUCH CONDUIT, ELECTRICAL BOXES, OR ASSOCIATED HARDWARE AT ANY POINT.
   C. THE ENTIRE LENGTH OF THE CABLE MUST HAVE A RESISTANCE GREATER THAN 1 MEGOHM TO EARTH.
   D. ALL CONDUCTORS ARE TO BE FREE OF SHORTS AND GROUNDS.
3. UNDERGROUND WIRING MUST BE LISTED FOR APPLICATION AND FREE OF ALL WATER.
4. WIRING OTHER THAN THAT CONNECTED TO ELEVATOR CABS MUST NOT BE RUN IN ELEVATOR SHAFTS (REF NFPA 70, ARTICLE 620).
5. WIRING IN DUCTS, PLENUMS AND OTHER AIR HANDLING SPACES MUST BE LISTED FOR PLENUM USE AND INSTALLED IN ACCORDANCE WITH NFPA 70, ARTICLE 300.
6. SPLICING IS PERMITTED IN ACCORDANCE WITH NFPA 70. ALL JUNCTIONS MUST BE INSULATED AS SOUNDLY AS THE ORIGINAL JACKET. CONTINUITY OF ANY SHIELD (WHERE USED) MUST BE MAINTAINED.
7. ONLY SYSTEM WIRING CAN BE RUN IN THE SAME CONDUIT.
8. THE COMMUNICATION CIRCUIT MEETS THE OPERATIONAL CHARACTERISTICS DEFINED FOR A STYLE 4 CLASS B AND STYLE 6 CLASS A SIGNALING LINE CIRCUIT. MAXIMUM WIRE RUN NOT TO EXCEED 2500 FT.
9. ALL CIRCUITS ARE SUPERVISED AND POWER-LIMITED UNLESS OTHERWISE INDICATED. SHIELD WIRES ARE NOT SUPERVISED.
10. OPERATING POWER, FOR ADDRESSABLE DEVICES, MUST ORIGINATE FROM A POWER-LIMITED POWER SUPPLY LISTED FOR FIRE PROTECTIVE SIGNALING USE OR, FROM THE F.A. CONTROL PANEL POWER SUPPLIES INDICATED IN THE APPROPRIATE DIAGRAM. MAXIMUM WIRE NOT TO EXCEED 1KM (3270 FT).
11. WHEN COMMUNICATION WIRING OR OPERATING WIRING LEAVES THE BUILDING, OVERVOLTAGE PROTECTORS ARE REQUIRED; INSTALL ONE WHERE IT LEAVES THE BUILDING AND ONE WHERE IT ENTERS THE NEXT BUILDING.
12. TO PREVENT CONFUSION AND POSSIBLE ERRORS, TAG ALL CONDUCTORS, CODE AT INSTALLATION, TO IDENTIFY CIRCUIT ASSIGNMENT, POLARITY AND IN OR OUT DIRECTION OF THE WIRING. LOG ON AS-BUILTS.
13. LEAVE ADEQUATE SLACK IN THE WIRING TO ALLOW FOR TROUBLE SHOOTING. MC CARLEY FIRE IS NOT RESPONSIBLE FOR ELECTRICAL CONTRACTORS WIRE CONDITIONS.

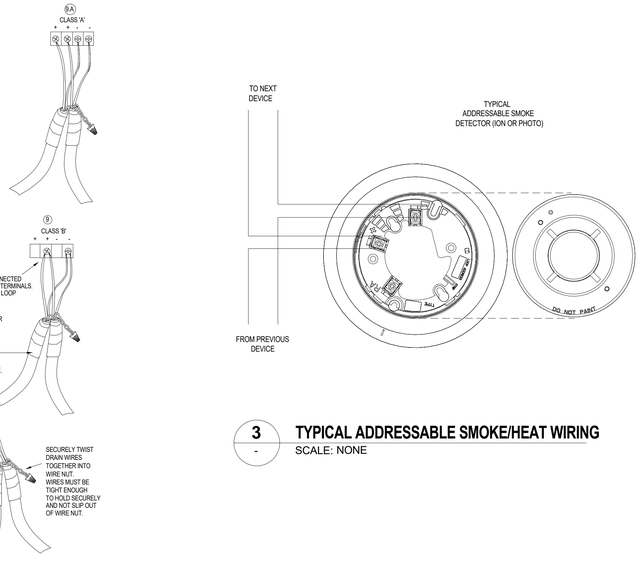

5 SIGNALING LINE CIRCUITS SHIELDING EXAMPLE

NO SCALE

3 TYPICAL ADDRESSABLE SMOKE/HEAT WIRING

SCALE: NONE

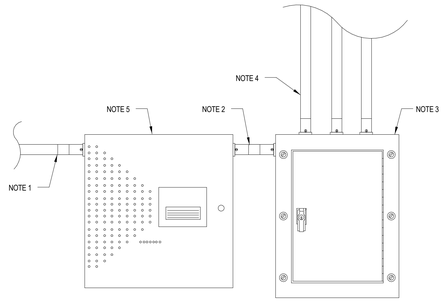

1. NEW CONDUIT TO POWER CIRCUIT
2. NEW 1" CONDUIT MINIMUM BETWEEN NAC PANEL AND TERMINAL CABINET
3. NEW 16HX12WX4D NEMA 1 TELEPHONE STYLE TERMINAL CABINET (TYPICAL)
4. CONDUITS TO FIELD DEVICES AND CONNECTIONS SHOWN ON PLANS
5. TYPICAL 'NAC' PANEL

1 TYPICAL NAC PANEL TO TERMINAL CABINET DETAIL

SCALE: NONE

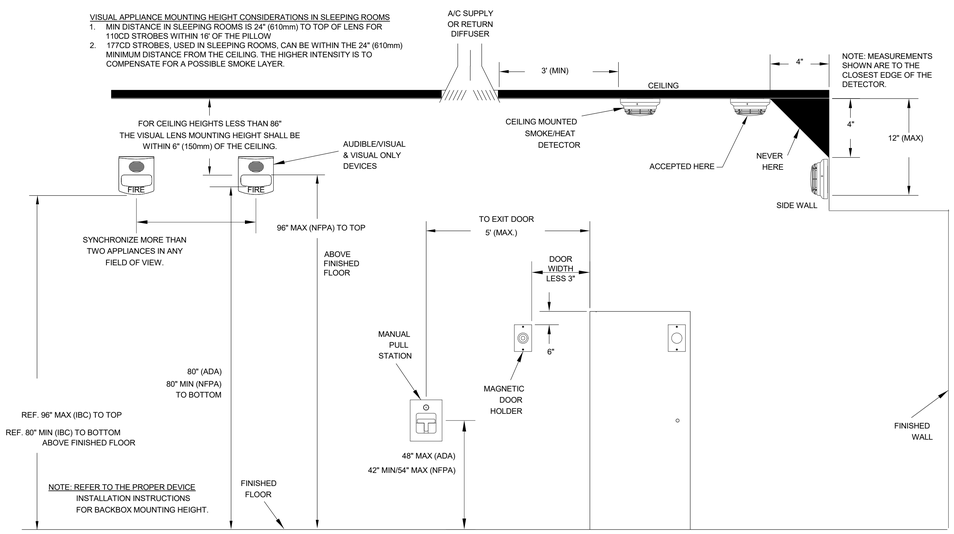

6 FIRE ALARM DEVICE MOUNTING HEIGHTS (PER NFPA 72)

NO SCALE

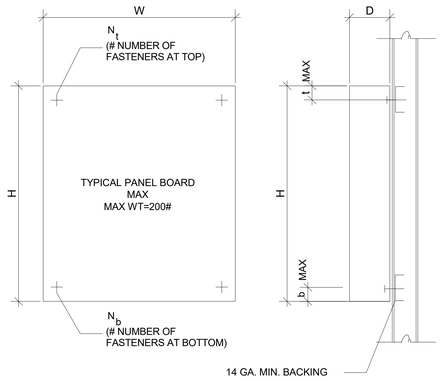

TYPICAL FASTENERS:
AT METAL BACKING USE #14 HHSMS W/ WASHERS
AT CONCRETE WALL USE: $\frac{1}{4}$" DIA. HILTI KWIK BOLT W/ 2" EMBEDMENT (ESR-1385)
TEST LOAD: 7 ft-lb
(PER MANUFACTURE'S MINIMUM INSTALLATION REQUIREMENTS)
(E) CONCRETE: 3000psi, REGWT. CONCRETE.

NOTE: WHEN INSTALLING DRILLED-IN ANCHORS AND/OR POWDER DRIVEN PINS IN EXISTING NON-PRESTRESSED REINFORCED CONCRETE, USE CARE AND CAUTION TO AVOID CUTTING OR DAMAGING THE EXISTING REINFORCING BARS. MAINTAIN A MINIMUM CLEARANCE OF ONE INCH BETWEEN THE REINFORCEMENT AND DRILLED-IN ANCHOR AND/OR PIN.

TYP MTG OF EQUIP. WEIGHING OVER 20 LBS.
(200 LBS MAXIMUM)

4 TYPICAL NAC PANEL SUPPORT DETAIL

SCALE: NONE

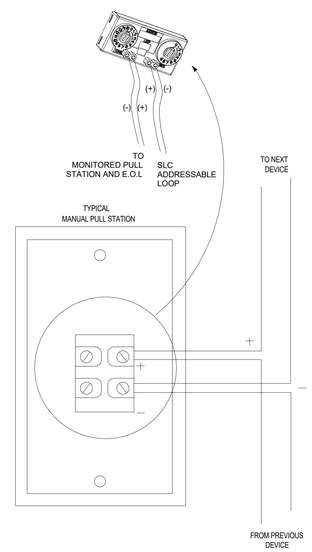

2 TYPICAL ADDRESSABLE MANUAL STATION WIRING

SCALE: NONE

els architecture+ urban design
2040 Addison St, Berkeley, CA 94704
510.549.2929 | elsarch.com

PROJECT:

PIEDMONT COMMUNITY POOL

777 MAGNOLIA AVENUE PIEDMONT, CA 94611

CLIENT:

CITY OF PIEDMONT

120 VISTA AVENUE PIEDMONT, CA 94611

PROJECT TEAM:

ARCHITECT:
ELS ARCHITECTURE AND URBAN DESIGN
2040 Addison Street
Berkeley, CA 94704
P: 510.549.2929

CIVIL ENGINEER:
BKF ENGINEERS
4670 Willow Road, Suite 250
Pleasanton, CA 94588
P: (925) 396-7704

LANDSCAPE ARCHITECT:
SWA
2200 Bridgeway
Sausalito, CA 94965
P: 415.332.5100

STRUCTURAL ENGINEER:
FORELL/ELSESSER ENGINEERS, INC.
160 Pine Street, 6th Floor
San Francisco, CA 94111
P: 415.837.0700

MEP / FIRE PROTECTION:
GUTTMANN & BLAEVOET
1620 Montgomery Street, Suite 230
San Francisco, CA 94111
P: 415.655.4000

AQUATICS:
AQUATICS DESIGN GROUP
2226 Faraday Avenue
Carlsbad, CA 92008
P: 760.438.8400

SPECIFICATIONS
TOPFLIGHT SPECS
49 Geary Street, Suite 230
San Francisco, CA 94108-5748
P: 415.546.6033

REVISION

NUMBER	DATE	DESCRIPTION

ISSUE:
100% DESIGN DEVELOPMENT

DATE:
APRIL 30, 2022

STAMP:

NOT FOR CONSTRUCTION

SHEET TITLE:
FIRE ALARM DETAILS

SHEET NUMBER:
FA702

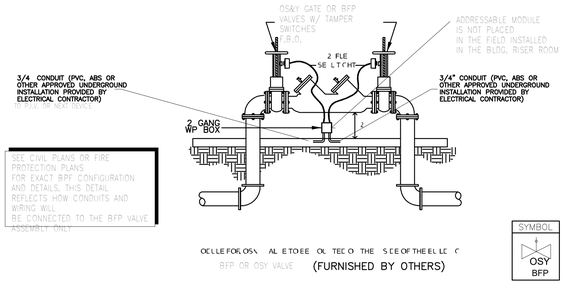

5 - TYPICAL BFP OR OSY FIRE ALARM MONITORING CONDUIT CONNECTION DETAIL
SCALE: NONE

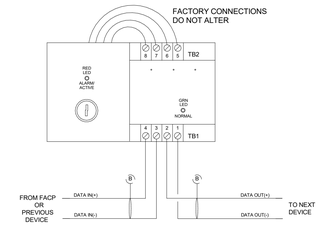

1 - REMOTE TEST KEYSWITCH DETAIL
SCALE: NONE

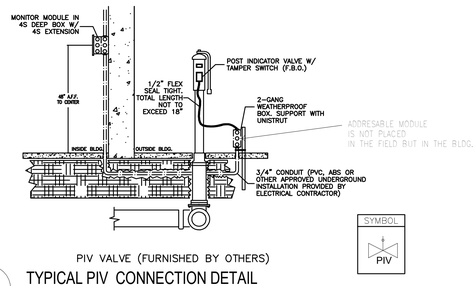

PIV VALVE (FURNISHED BY OTHERS)

6 - TYPICAL PIV CONNECTION DETAIL
SCALE: NONE

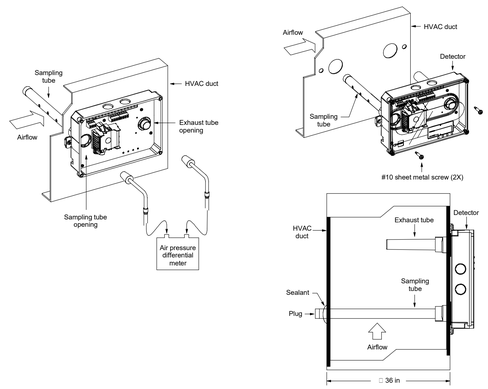

2 - DUCT DETECTOR MOUTING AND CONFIGURATION DETAIL
SCALE: NONE

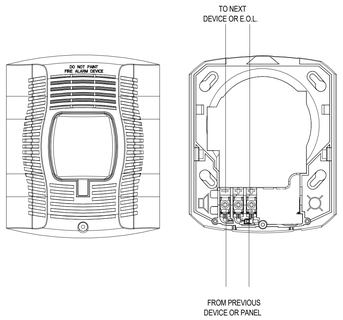

7 - TYPICAL HORN AND STROBE WIRING 2 WIRE
SCALE: NONE

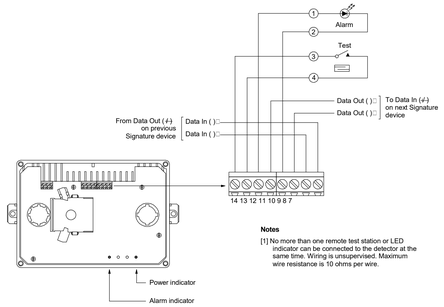

Notes

[1] No more than one remote test station or LED indicator can be connected to the detector at the same time. Wiring is unsupervised. Maximum wire resistance is 10 ohms per wire.

3 - DUCT DETECTOR WIRING DETAIL
SCALE: NONE

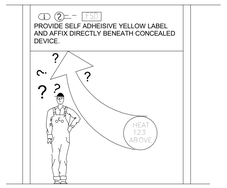

NOTE:
WHENEVER AN INITIATING DEVICE OR OTHER DEVICE IS INSTALLED IN A LOCATION THAT IS CONCEALED FROM VIEW, ITS LOCATION IS TO BE INDICATED AS TO WHAT TYPE OF DEVICE, AN ADDRESS NUMBER (IF APPLICABLE) AND WHERE APPROX. THE DEVICE IS LOCATED IN RELATION TO THE SIGN.

4 - TYPICAL ABOVE CEILING DEVICE MARKING REQUIREMENTS
SCALE: NONE

els architecture+ urban design
2040 Addison St, Berkeley, CA 94704
510.549.2929 | elsarch.com

PROJECT:

PIEDMONT COMMUNITY POOL

777 MAGNOLIA AVENUE PIEDMONT, CA 94611

CLIENT:

CITY OF PIEDMONT

120 VISTA AVENUE PIEDMONT, CA 94611

PROJECT TEAM:

ARCHITECT:
ELS ARCHITECTURE AND URBAN DESIGN
2040 Addison Street
Berkeley, CA 94704
P: 510.549.2929

CIVIL ENGINEER:
BKF ENGINEERS
4670 Willow Road, Suite 250
Pleasanton, CA 94588
P: (925) 396-7704

LANDSCAPE ARCHITECT:
SWA
2200 Bridgeway
Sausalito, CA 94965
P: 415.332.5100

STRUCTURAL ENGINEER:
FORELL/ELSESSER ENGINEERS, INC.
160 Pine Street, 6th Floor
San Francisco, CA 94111
P: 415.837.0700

MEP / FIRE PROTECTION:
GUTTMANN & BLAEVOET
1620 Montgomery Street, Suite 230
San Francisco, CA 94111
P: 415.655.4000

AQUATICS:
AQUATICS DESIGN GROUP
2226 Faraday Avenue
Carlsbad, CA 92008
P: 760.438.8400

SPECIFICATIONS
TOPFLIGHT SPECS
49 Geary Street, Suite 230
San Francisco, CA 94108-5748
P: 415.546.6033

REVISION

NUMBER	DATE	DESCRIPTION

ISSUE:
100% DESIGN DEVELOPMENT

DATE:
APRIL 30, 2022

STAMP:

NOT FOR CONSTRUCTION

SHEET TITLE:

FIRE ALARM DETAILS

SHEET NUMBER:

FA703

ACTIVITY POOL DATA

SURFACE AREA	=	2,620 SQ. FT.
PERIMETER	=	224 FT.
DEPTH	=	0'-0" TO 4'-3"
VOLUME	=	55,454 GAL.
3 HR TURNOVER	=	308 GPM

PRODUCT LEGEND

	PRODUCT CODE	QTY	TOTAL FLOW	
1	WATERFALL 2 "WATERPLAY"	1	11 GPM	5 / AP-5
2	SNEAKY SOAKER 3 "WATERPLAY" CONTROLLED VIA TIME CLOCK ON BOOSTER	1	15 GPM	8 / AP-5
	PUMP		TOTAL FLOW 26 GPM	

LEGEND

MD	=	MAIN DRAIN
GR	=	GRABRAIL
DM	=	DEPTH MARKER
NR	=	'NO RUNNING'
ND	=	'NO DIVING'
RA	=	ROPE ANCHOR
MGC	=	MOVEABLE GUARD CHAIR
UL	=	UNDERWATER LIGHT
AL	=	ACCESSIBLE LIFT
HR	=	HANDRAIL

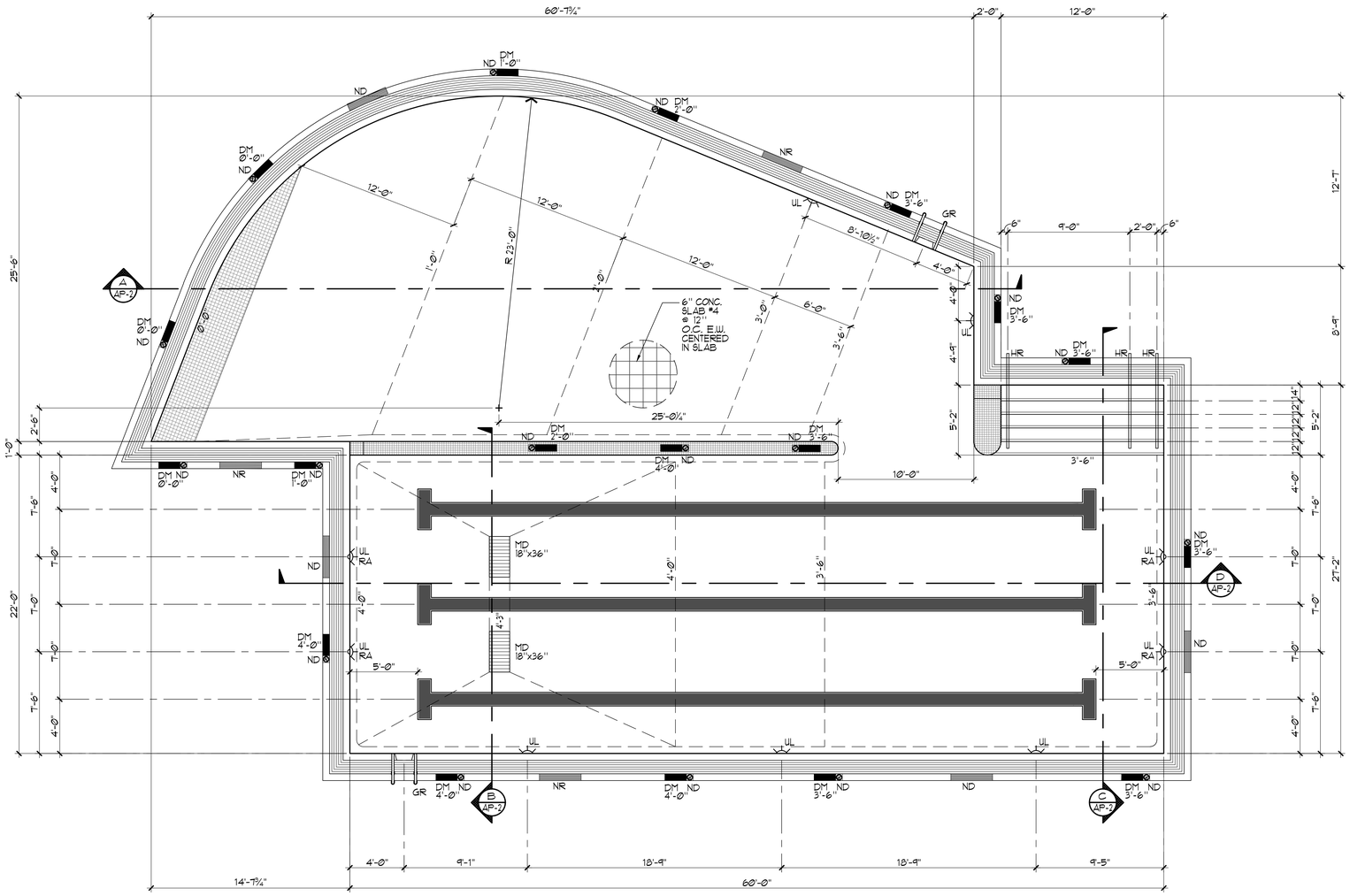

NORTH

1 ACTIVITY POOL LAYOUT PLAN ¼" = 1'-0"

els architecture+ urban design
2040 Addison St, Berkeley, CA 94704
510.549.2929 | elsarch.com

PROJECT:

PIEDMONT COMMUNITY POOL

777 MAGNOLIA AVENUE PIEDMONT, CA 94611

PROJECT NUMBER:
202115

CLIENT:
CITY OF PIEDMONT
120 VISTA AVENUE
PIEDMONT, CA 94611

PROJECT TEAM:

ARCHITECT:
ELS ARCHITECTURE AND URBAN DESIGN
2040 Addison Street
Berkeley, CA 94704
P: 510.549.2929

CIVIL ENGINEER:
BKF ENGINEERS
4670 Willow Road, Suite 250
Pleasanton, CA 94588
P: 925.396.7700

LANDSCAPE ARCHITECT:
SWA
2200 Bridgeway
Sausalito, CA 94965
P: 415.332.5100

STRUCTURAL ENGINEER:
FORELL/ELSESSER
160 Pine Street, Suite 600
San Francisco, CA 94111
P: 415.837.0700

MEP / FIRE / TELECOM / SECURITY:
GUTTMANN & BLAEVOET
2351 Powell Street
San Francisco, CA 94133
P: 415.655.4000

AQUATICS:
AQUATIC DESIGN GROUP
2226 Faraday Avenue
Carlsbad, CA 92008
P: 760.438.8400

SPECIFICATIONS:
TOPFLIGHT SPECS
49 Geary Street, Suite 230
San Francisco, CA 94108-5748
P: 415.546.6033

REVISION

NUMBER	DATE	DESCRIPTION

ISSUE:
100% DESIGN DEVELOPMENT

DATE:
APRIL 30, 2022

STAMP:

NOT FOR CONSTRUCTION

SHEET TITLE:
ACTIVITY POOL LAYOUT PLAN

SHEET NUMBER:
AP-1

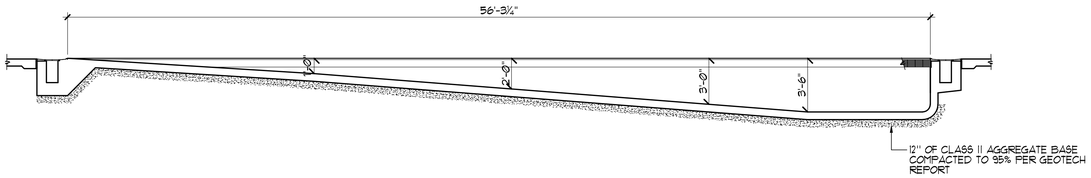

A ACTIVITY POOL LAYOUT PLAN ¼" = 1'-0"

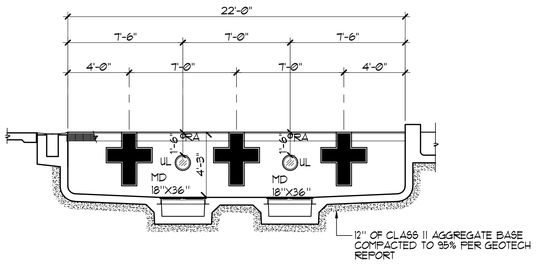

B ACTIVITY POOL LAYOUT PLAN ¼" = 1'-0"

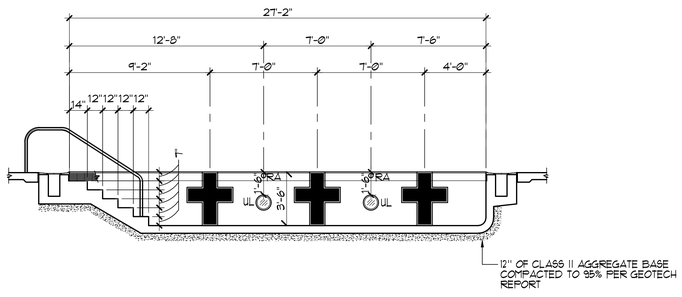

C ACTIVITY POOL LAYOUT PLAN ¼" = 1'-0"

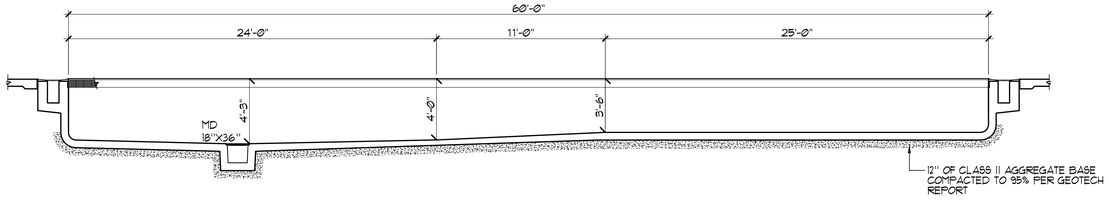

D ACTIVITY POOL LAYOUT PLAN ¼" = 1'-0"

els architecture+ urban design
2040 Addison St, Berkeley, CA 94704
510.549.2929 | elsarch.com

PROJECT:

PIEDMONT COMMUNITY POOL

777 MAGNOLIA AVENUE PIEDMONT, CA 94611

PROJECT NUMBER:
202115

CLIENT:
CITY OF PIEDMONT
120 VISTA AVENUE
PIEDMONT, CA 94611

PROJECT TEAM:

ARCHITECT:
ELS ARCHITECTURE AND URBAN DESIGN
2040 Addison Street
Berkeley, CA 94704
P: 510.549.2929

CIVIL ENGINEER:
BKF ENGINEERS
4670 Willow Road, Suite 250
Pleasanton, CA 94588
P: 925.396.7700

LANDSCAPE ARCHITECT:
SWA
2200 Bridgeway
Sausalito, CA 94965
P: 415.332.5100

STRUCTURAL ENGINEER:
FORELL/ELSESSER
160 Pine Street, Suite 600
San Francisco, CA 94111
P: 415.837.0700

MEP / FIRE / TELECOM / SECURITY:
GUTTMANN & BLAEVOET
2351 Powell Street
San Francisco, CA 94133
P: 415.655.4000

AQUATICS:
AQUATIC DESIGN GROUP
2226 Faraday Avenue
Carlsbad, CA 92008
P: 760.438.8400

SPECIFICATIONS:
TOPFLIGHT SPECS
49 Geary Street, Suite 230
San Francisco, CA 94108-5748
P: 415.546.6033

REVISION

NUMBER	DATE	DESCRIPTION

ISSUE:
100% DESIGN DEVELOPMENT

DATE:
APRIL 30, 2022

STAMP:

NOT FOR CONSTRUCTION

SHEET TITLE:
ACTIVITY POOL LAYOUT PLAN

SHEET NUMBER:
AP-2

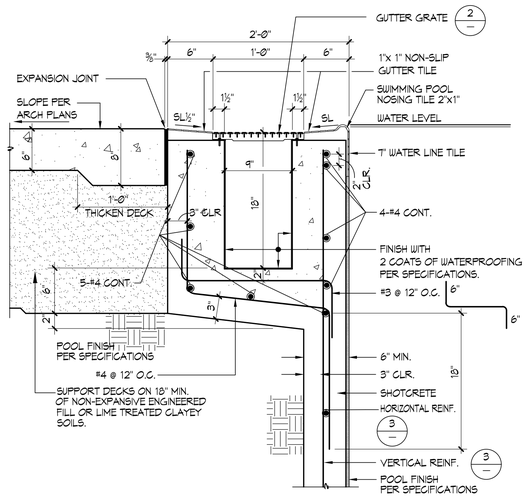

1 RIM FLOW GUTTER

1½"=1'-0"

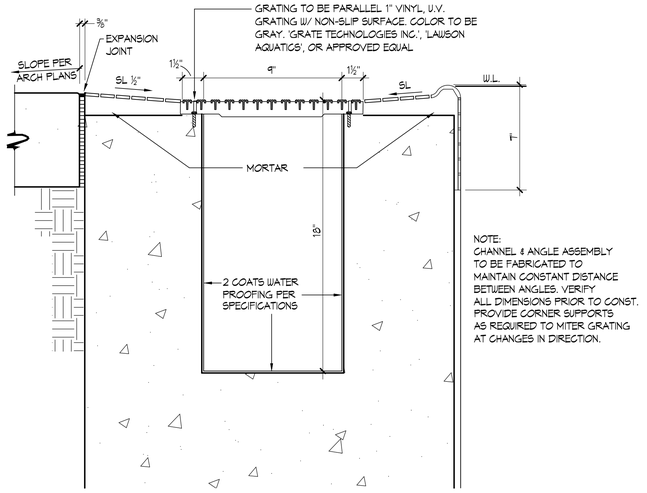

2 RIM FLOW GUTTER/GRATE

3"=1'-0"

REINFORCEMENT TABLE

WATER DEPTH	"t"	"ds"	RADIUS	VERTICAL REINF.	HORIZONTAL REINF.	TRANSITION TO FLOOR REINF. BEYOND END RADIUS
0'-0" TO 3'-6"	6"	3"	0" TO 6"	#4 @ 12" O.C.	#4 @ 12" O.C.	24"
3'-6" TO 4'-6"	6"	3"	6" TO 12"	#4 @ 12" O.C.	#4 @ 12" O.C.	24"

CONCRETE NOTES:

1. THE MINIMUM ULTIMATE COMPRESSIVE STRENGTH AT 28 DAYS WITH A 0.40-0.50 MAX. WATER/CEMENT RATIO
   POOL = 4000 PSI
   SLAB-ON-GRADE = 4000 PSI
2. CONTINUOUS INSPECTION BY AN APPROVED INSPECTOR IS REQUIRED OF ALL CONCRETE PLACEMENT.
3. ALL CEMENT USED SHALL CONFORM TO A.S.T.M. C-150 TYPE II
4. FINE AND COARSE AGGREGATE SHALL CONFORM TO A.S.T.M. C-33. MAXIMUM SIZE OF AGGREGATE TO BE 1".
5. CONCRETE MIX DESIGNS SHALL BE BASED UPON CBC SECTION 1905.
6. CONCRETE SHALL BE TESTED AND INSPECTED PER SECTION CBC 1705.3 AND 1905.
7. REMOVAL OF FORMS SHALL COMPLY WITH CBC SECTION 1905.
8. ALL REINFORCING SHALL BE ASTM A-615, GRADE 60, UNLESS OTHERWISE NOTED. LAPS SHALL BE 64 BAR DIA.

SHOTCRETE NOTES:

1. SHOTCRETE SHALL HAVE A MINIMUM COMPRESSIVE STRENGTH OF 4,000 PSI AT 28 DAYS. SHOTCRETE MATERIAL SHALL HAVE A MAX. WATER/CEMENT RATIO OF 0.40-0.50 PER ACI 506R, CHAPTER 6, PROPORTIONING, AND PRECONSTRUCTION TESTING, SECTION 6.3.3, WET-MIX PROCESS.
2. CONTINUOUS INSPECTION BY AN APPROVED INSPECTOR IS REQUIRED OF ALL SHOTCRETE PLACEMENT.
3. ALL CEMENT USED SHALL CONFORM TO A.S.T.M. C-150 TYPE II
4. FINE AND COARSE AGGREGATE SHALL CONFORM TO A.S.T.M. C-33. MAXIMUM SIZE OF AGGREGATE TO BE 3/8".
5. SHOTCRETE MIX DESIGNS SHALL BE PER CBC SECTION 1908.2.
6. SHOTCRETE SHALL BE TESTED AND INSPECTED PER CBC SECTION 1908.5 AND 1908.10 AND 1705.3.
7. ANCHOR BOLTS, ANCHORS, DOWELS, INSERTS, ETC. SHALL BE SECURELY TIED IN PLACE PRIOR TO PLACING OF SHOTCRETE.
8. ALL REINFORCEMENT WITHIN SHOTCRETE SHALL MAINTAIN MINIMUM 2" CLEAR NON-CONTACT SPLICES.
9. THE FILM OF LAITANCE WHICH FORMS ON THE SURFACE OF THE SHOTCRETE SHALL BE REMOVED WITHIN APPROXIMATELY TWO HOURS AFTER APPLICATION BY BRUSHING WITH A STIFF BROOM. IF THIS IS NOT REMOVED WITHIN TWO HOURS, IT SHALL BE REMOVED BY THOROUGH WIRE BRUSHING OR SAND BLASTING. CONSTRUCTION JOINTS OVER EIGHT HOURS OLD SHALL BE THOROUGHLY CLEANED WITH AIR AND WATER PRIOR TO RECEIVING SHOTCRETE.
10. ALL REINFORCING SHALL BE ASTM A-615, GRADE 60, UNLESS OTHERWISE NOTED. LAPS SHALL BE 64 BAR DIA.

3 REINFORCEMENT TABLE

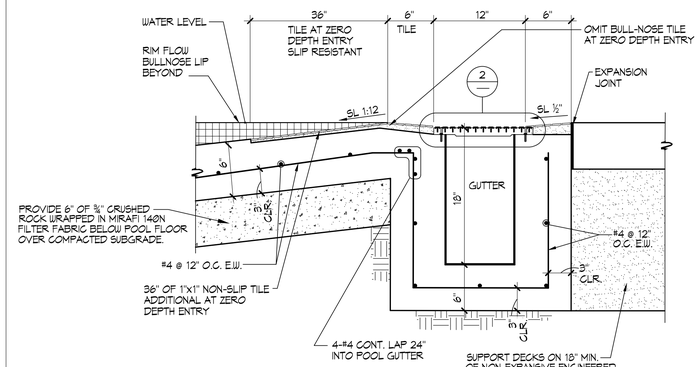

4 ZERO DEPTH ENTRY SECTION

1½"=1'-0"

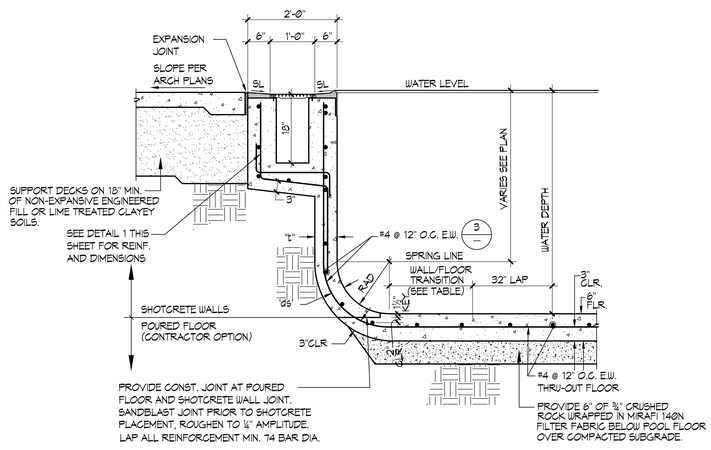

5 POOL WALL 1'-0'' TO 4'-6''

¾" = 1'-0"

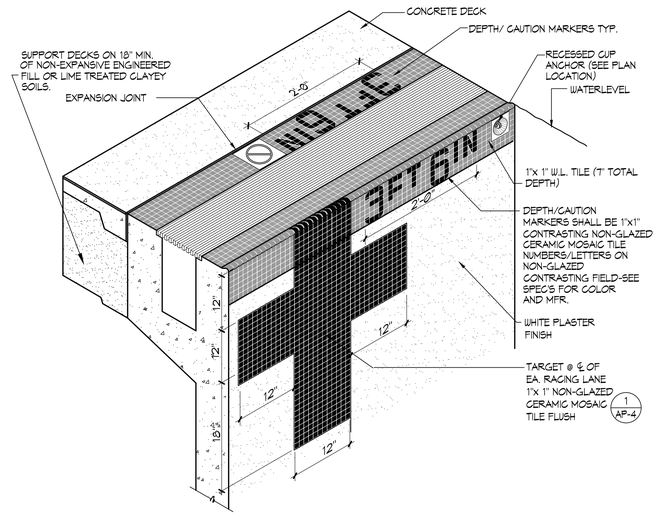

6 TYPICAL RIM FLOW GUTTER PERSPECTIVE

NO SCALE

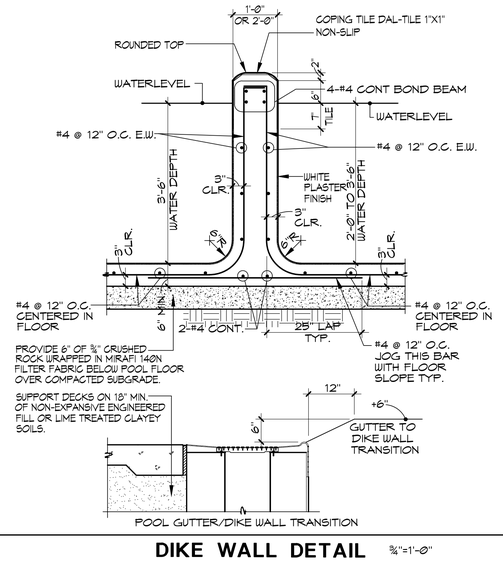

7 DIKE WALL DETAIL

¾"=1'-0"

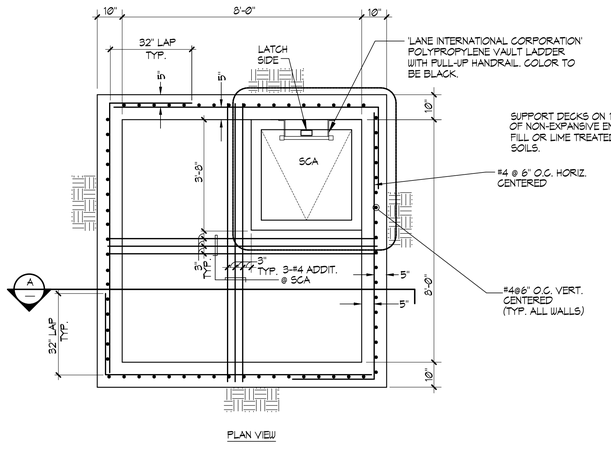

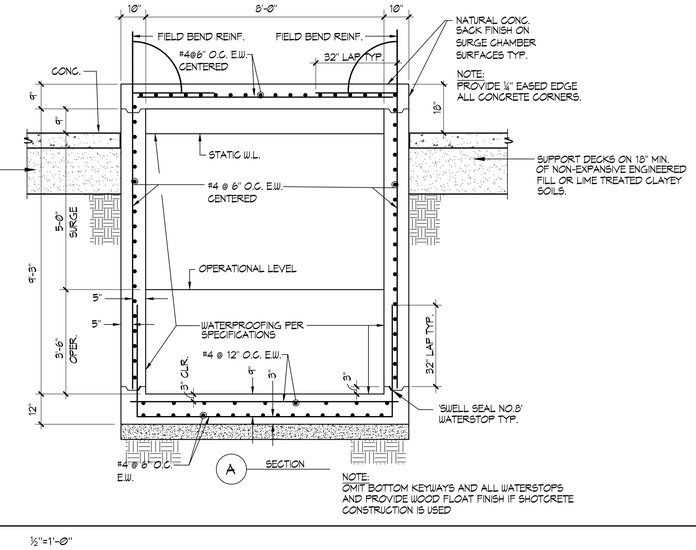

8 SURGE CHAMBER

½"=1'-0"

els architecture+ urban design
2040 Addison St, Berkeley, CA 94704
510.549.2929 | elsarch.com

PROJECT:

PIEDMONT COMMUNITY POOL

777 MAGNOLIA AVENUE PIEDMONT, CA 94611

PROJECT NUMBER:
202115

CLIENT:
CITY OF PIEDMONT
120 VISTA AVENUE
PIEDMONT, CA 94611

PROJECT TEAM:

ARCHITECT:
ELS ARCHITECTURE AND URBAN DESIGN
2040 Addison Street
Berkeley, CA 94704
P: 510.549.2929

CIVIL ENGINEER:
BKF ENGINEERS
4670 Willow Road, Suite 250
Pleasanton, CA 94588
P: 925.396.7700

LANDSCAPE ARCHITECT:
SWA
2200 Bridgeway
Sausalito, CA 94965
P: 415.332.5100

STRUCTURAL ENGINEER:
FORELL/ELSESSER
160 Pine Street, Suite 600
San Francisco, CA 94111
P: 415.837.0700

MEP / FIRE / TELECOM / SECURITY:
GUTTMANN & BLAEVOET
2351 Powell Street
San Francisco, CA 94133
P: 415.655.4000

AQUATICS:
AQUATIC DESIGN GROUP
2226 Faraday Avenue
Carlsbad, CA 92008
P: 760.438.8400

SPECIFICATIONS:
TOPFLIGHT SPECS
49 Geary Street, Suite 230
San Francisco, CA 94108-5748
P: 415.546.6033

REVISION

NUMBER	DATE	DESCRIPTION

ISSUE:
100% DESIGN DEVELOPMENT

DATE:
APRIL 30, 2022

STAMP:

NOT FOR CONSTRUCTION

SHEET TITLE:
DETAILS

SHEET NUMBER:
AP-3

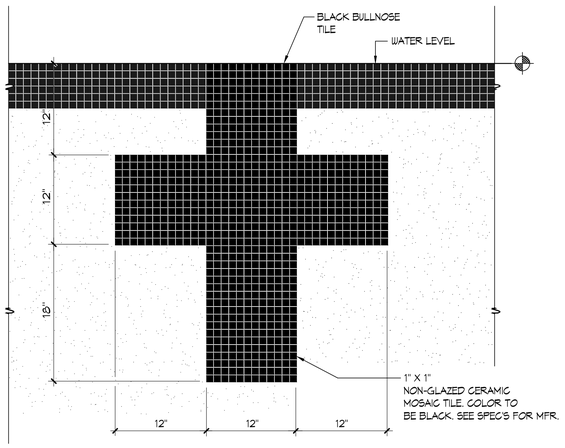

1 END WALL TARGET

1½" = 1'-0"

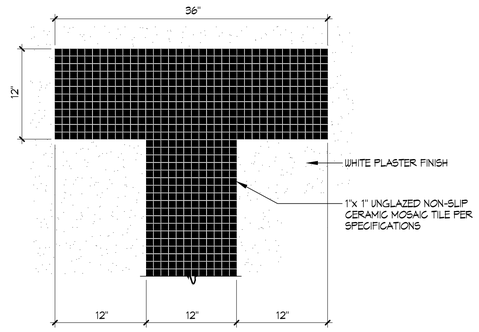

PLAN VIEW

2 RACING LANE LINE

1½"=1'-0"

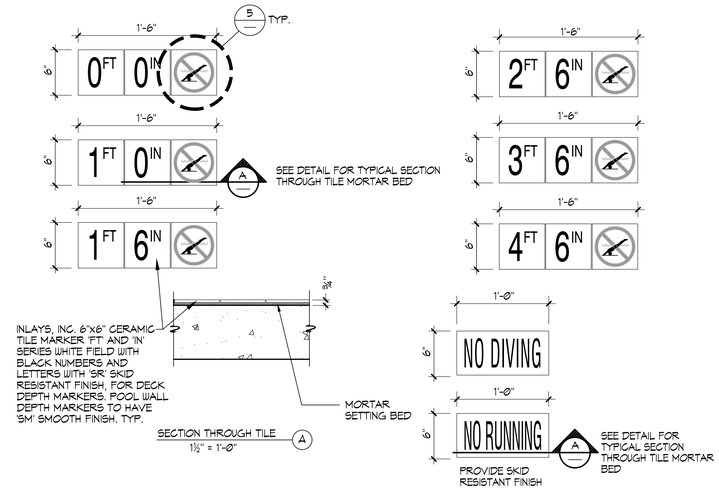

3 DEPTH AND CAUTION MARKERS

1½" = 1'-0"

NOT USED

4

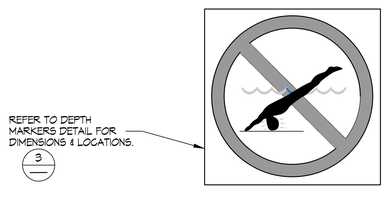

NOTE: PLACE IN DECK AT ALL DEPTH MARKER LOCATION OF 6'-0" OR LESS.

SILK SCREEN

1. INLAYS DOUBLE GLAZED WHITE SLIP RESISTANT TILE TYP. OF (1) PIECE OVER ¼" MORTAR BED WITH 1/16" GROUT JOINTS. SEE PLAN FOR LOCATION.
2. 1" WIDE RED CIRCLE WITH 1" WIDE RED DIAGONAL LINE.
3. 1/8" BLUE WATER.
4. 1/16" RED TICKS ABOUT THE HEAD.
5. TAN COLOR BODY WITH BLACK OUTLINE, HAIR AND TRUNKS.
6. 1/8" BLACK POOL FLOOR.

5 INTERNATIONAL "NO DIVING" MARKER

3" = 1'-0"

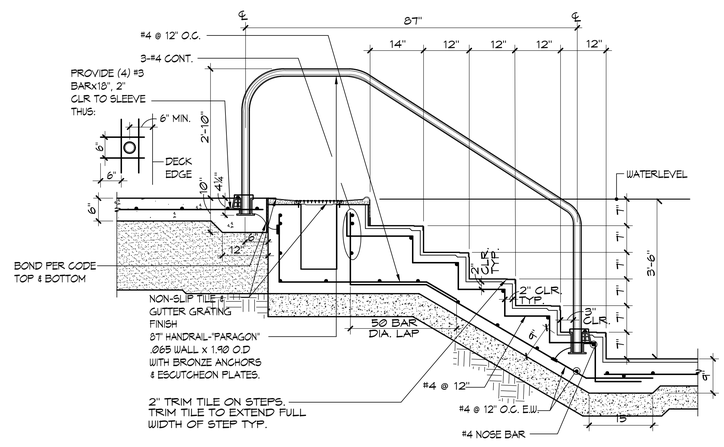

6 HANDRAIL DETAIL

¾"=1'-0"

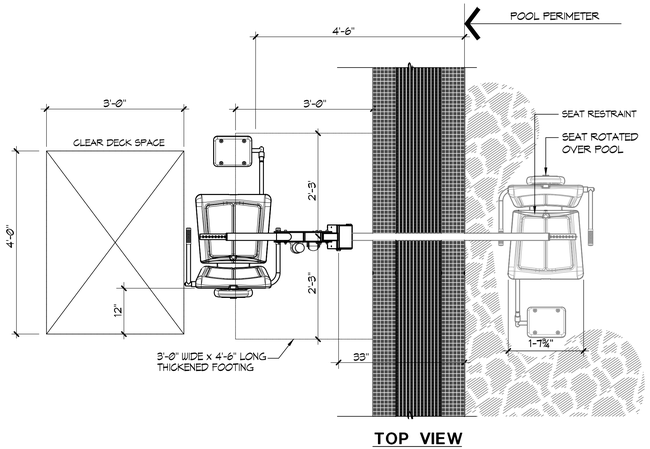

TOP VIEW

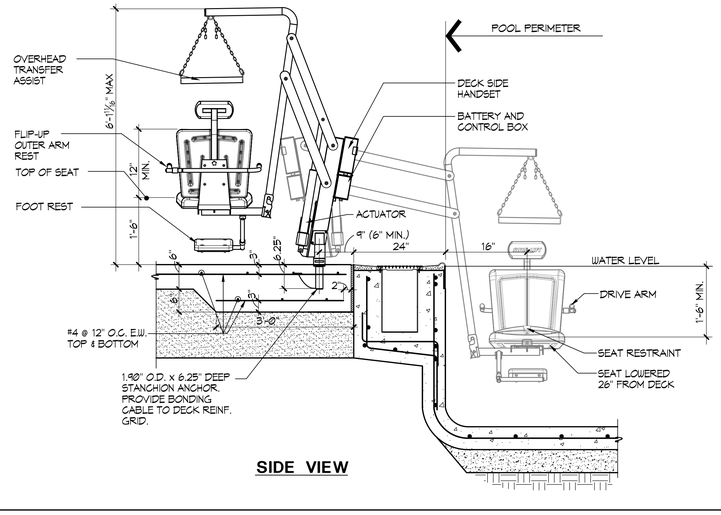

SIDE VIEW

7 ACCESSIBLE LIFT

¾" = 1'-0"

NOTES:

1. 'SPECTRUM' TRAVELER XRG 500 (350 lb. MIN. AND 500 lb. MAX. LIFTING CAPACITY)
2. GUSSET COVER PLATE TO BE ATTACHED REQUIRING A TOOL FOR REMOVAL.
3. CONTRACTOR SHALL PROVIDE COVER FOR LIFT 'SPECTRUM' #27365; EXTRA BATTERY PACK 'SPECTRUM' #13257; AND TRANSPORTER CART 'SPECTRUM' #26060.
4. UTILIZE OUTLET IN SWIM TEAM ROOM FOR DISABLED LIFT BATTERY CHARGE STATION. SEE SP.3.
5. POOL LIFT SHALL BE LOCATED WHERE THE WATER LEVEL IS AT LEAST 36" AND DOES NOT EXCEED 48" DEEP , UNLESS ENTIRE POOL IS GREATER THAT 48" DEEP. (CBC SECTION 11B-1009.2.1)
6. ON THE RAISED POSITION, THE CENTERLINE OF THE SEAT SHALL BE LOCATED OVER THE DECK AND 16" MINIMUM FROM THE EDGE OF THE POOL. THE DECK SURFACE BETWEEN THE CENTERLINE OF THE SEAT AND THE POOL EDGE SHALL HAVE A 2% MAX. SLOPE. (CBC SECTION 11B-1009.2.2)
7. CLEAR DECK SPACE SHALL BE PROVIDED ON SIDE OF SEAT OPPOSITE THE WATER PARALLEL TO THE WATER 36" WIDE x 48" MINIMUM FROM A LINE LOCATED 12" BEHIND THE REAR EDGE OF THE SEAT. THE CLEAR SPACE SHALL HAVE A 2% MAX. SLOPE. (CBC SECTION 11B-1009.2.3)
8. THE HEIGHT OF THE LIFT SEAT SHALL BE DESIGNED TO ALLOW A STOP AT 17" MIN. TO 19" MAX. MEASURED FROM THE DECK TO THE TOP OF THE SEAT SURFACE WHEN IN THE RAISED POSITION. (CBC SECTION 11B-1009.2.4)
9. THE SEAT SHALL BE RIGID AND 17" MIN. TO 19" MAX. WIDE. THE LIFT SEAT SHALL HAVE A BACK SUPPORT 12" MIN. TALL. (CBC SECTION 11B-1009.2.4)
10. FOOTRESTS SHALL BE PROVIDED, EXCEPT FOR SPA LIFTS, AND SHALL MOVE WITH THE SEAT. LIFT SHALL HAVE TWO ARMRESTS. THE ARMREST POSITIONED OPPOSITE THE WATER SHALL BE REMOVABLE OR SHALL FOLD CLEAR OF THE SEAT WHEN THE SEAT IS IN THE RAISED POSITION. (CBC SECTION 11B-1009.2.6)
11. THE LIFT SHALL BE CAPABLE OF UNASSISTED OPERATION FROM BOTH THE DECK AND WATER LEVELS. CONTROLS AND OPERATING MECHANISMS SHALL BE OPERABLE WITH ONE HAND AND SHALL BE UNOBSTRUCTED WHEN THE LIFT IS IN USE (CBC SECTION 11B-309.4). LIFT MUST BE STABLE AND NOT PERMIT UNINTENDED MOVEMENT WHEN A PERSON IS GETTING INTO OR OUT OF THE SEAT. (CBC SECTION 11B-1009.2.1)
12. THE LIFT SHALL BE DESIGNED SO THAT THE SEAT WILL SUBMERGE TO A WATER DEPTH OF 18" MIN. BELOW THE STATIONARY WATER LEVEL. (CBC SECTION 11B-1009.2.5)
13. LIFT SEAT MUST HAVE AN OCCUPANT RESTRAINT FOR USE BY THE OCCUPANT OF THE SEAT AND THE RESTRAINT MUST MEET THE STANDARDS FOR OPERABLE CONTROLS IN COMPLIANCE WITH CBC SECTION 11B-1009.2.4 AND SECTION 11B-309.

els architecture+ urban design
2040 Addison St, Berkeley, CA 94704
510.549.2929 | elsarch.com

PROJECT:

PIEDMONT COMMUNITY POOL

777 MAGNOLIA AVENUE PIEDMONT, CA 94611

PROJECT NUMBER:
202115

CLIENT:
CITY OF PIEDMONT
120 VISTA AVENUE PIEDMONT, CA 94611

PROJECT TEAM:

ARCHITECT:
ELS ARCHITECTURE AND URBAN DESIGN
2040 Addison Street
Berkeley, CA 94704
P: 510.549.2929

CIVIL ENGINEER:
BKF ENGINEERS
4670 Willow Road, Suite 250
Pleasanton, CA 94588
P: 925.396.7700

LANDSCAPE ARCHITECT:
SWA
2200 Bridgeway
Sausalito, CA 94965
P: 415.332.5100

STRUCTURAL ENGINEER:
FORELL/ELSESSER
160 Pine Street, Suite 600
San Francisco, CA 94111
P: 415.837.0700

MEP / FIRE / TELECOM / SECURITY:
GUTTMANN & BLAEVOET
2351 Powell Street
San Francisco, CA 94133
P: 415.655.4000

AQUATICS:
AQUATIC DESIGN GROUP
2226 Faraday Avenue
Carlsbad, CA 92008
P: 760.438.8400

SPECIFICATIONS:
TOPFLIGHT SPECS
49 Geary Street, Suite 230
San Francisco, CA 94108-5748
P: 415.546.6033

REVISION

NUMBER	DATE	DESCRIPTION

ISSUE:
100% DESIGN DEVELOPMENT

DATE:
APRIL 30, 2022

STAMP:

NOT FOR CONSTRUCTION

SHEET TITLE:
DETAILS

SHEET NUMBER:
AP-4

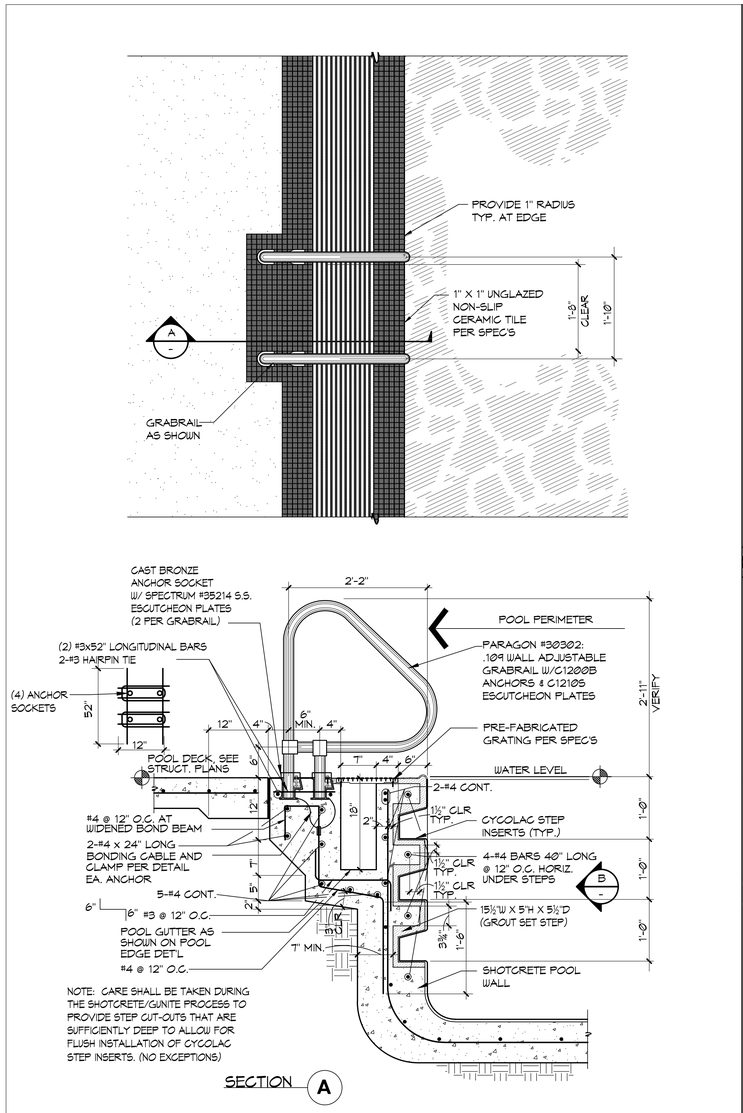

1 GRABRAIL WITH STEPS 1"=1'-0"

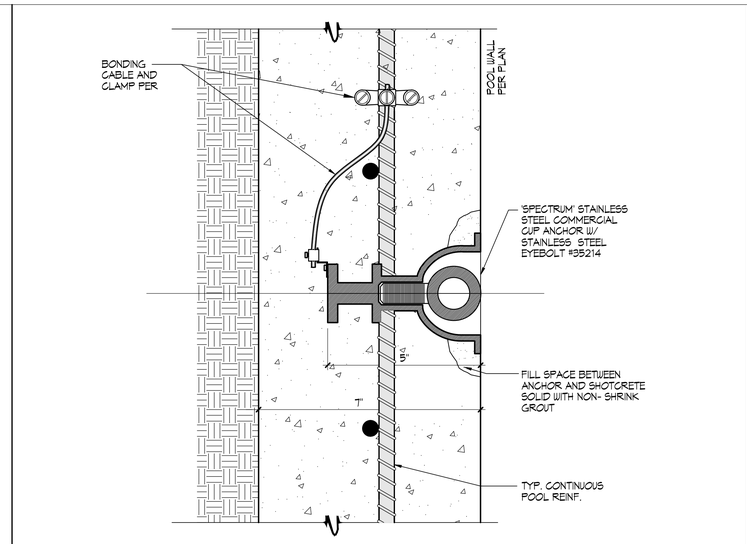

2 ROPE ANCHOR ½" = 1"

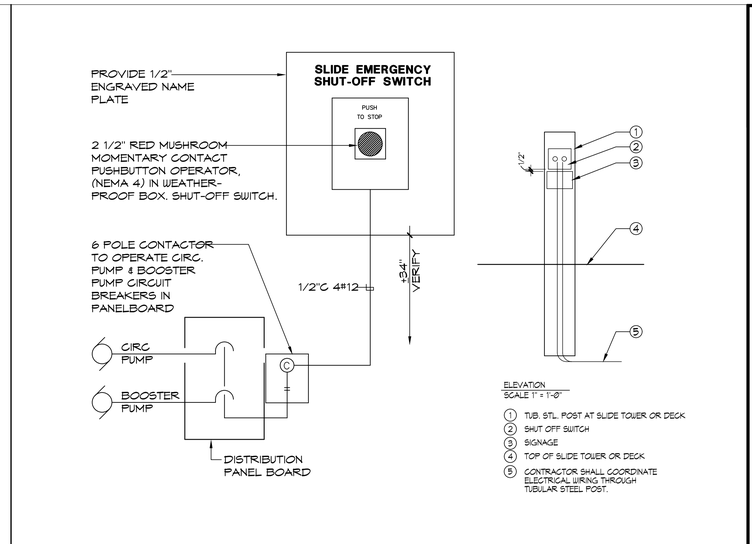

3 SLIDE EMERGENCY SHUT-OFF SWITCH NO SCALE

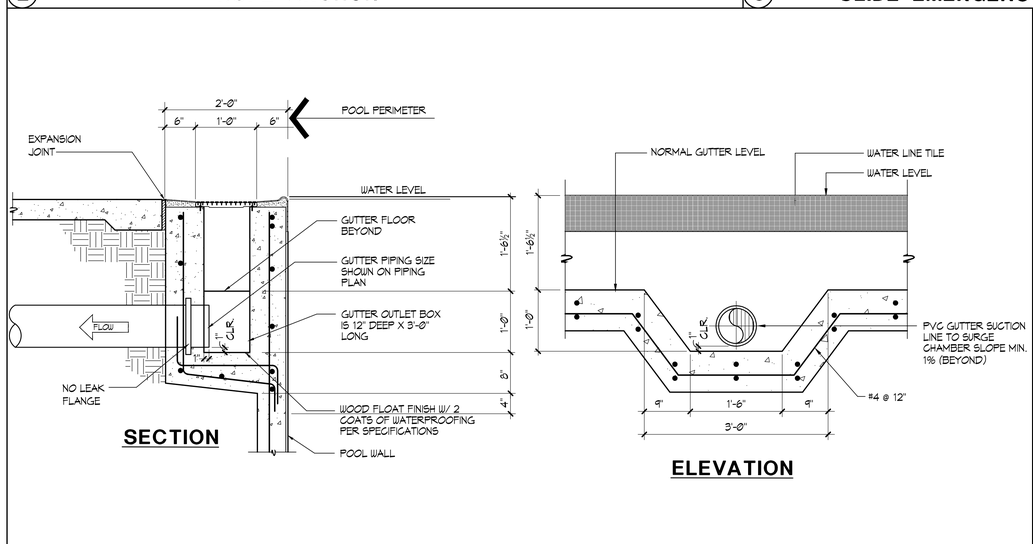

4 GUTTER OUTLET 1"=1'-0"

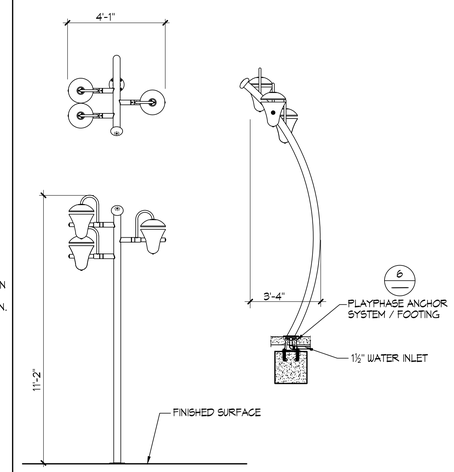

5 SNEAKY SOAKER 3 NO SCALE

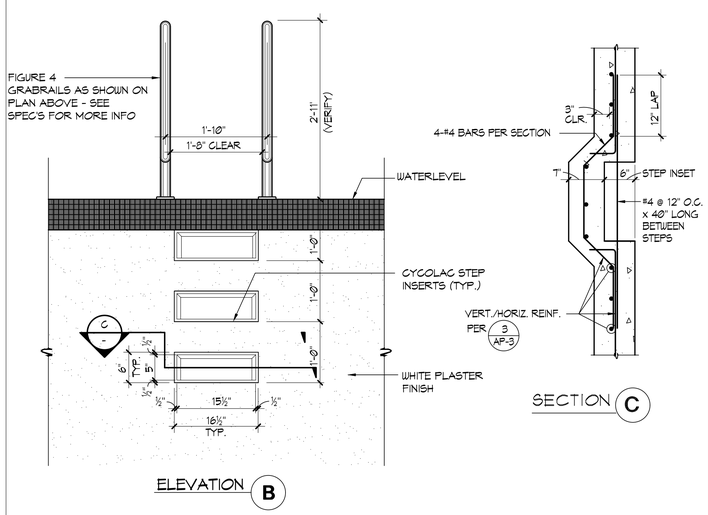

1 GRABRAIL WITH STEPS 1"=1'-0"

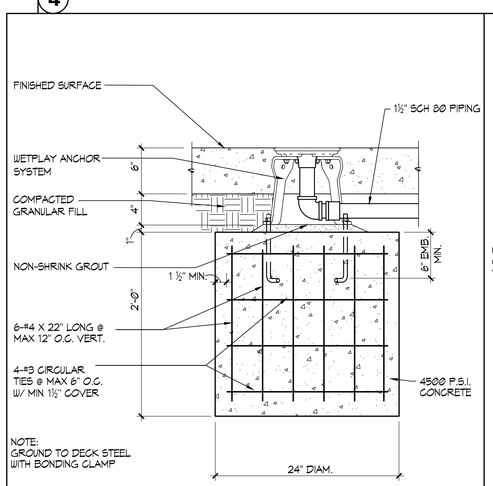

6 PLAYPHASE ANCHOR SYSTEM 1½" = 1'-0"

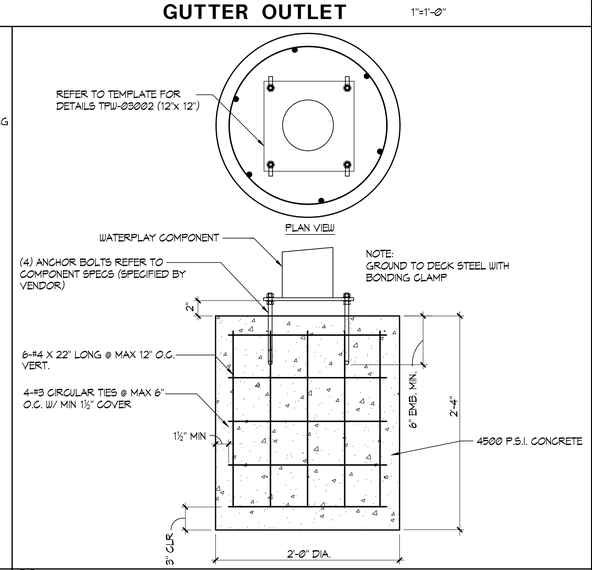

7 FOOTING 'C' 1½"=1'-0"

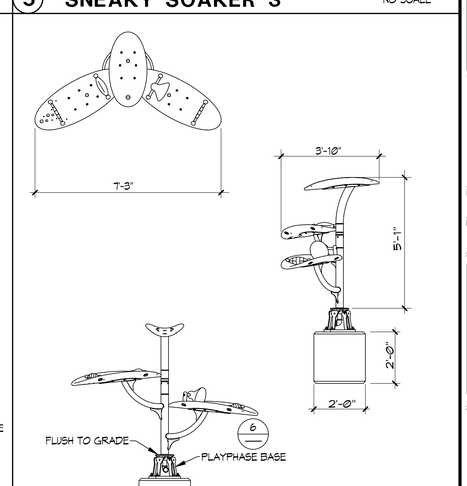

8 WATERFALL 2 NO SCALE

els architecture+ urban design
2040 Addison St, Berkeley, CA 94704
510.549.2929 | elsarch.com

PROJECT:

PIEDMONT COMMUNITY POOL

777 MAGNOLIA AVENUE PIEDMONT, CA 94611

PROJECT NUMBER:
202115

CLIENT:
CITY OF PIEDMONT
120 VISTA AVENUE PIEDMONT, CA 94611

PROJECT TEAM:

ARCHITECT:
ELS ARCHITECTURE AND URBAN DESIGN
2040 Addison Street
Berkeley, CA 94704
P: 510.549.2929

CIVIL ENGINEER:
BKF ENGINEERS
4670 Willow Road, Suite 250
Pleasanton, CA 94588
P: 925.396.7700

LANDSCAPE ARCHITECT:
SWA
2200 Bridgeway
Sausalito, CA 94965
P: 415.332.5100

STRUCTURAL ENGINEER:
FORELL/ELSESSER
160 Pine Street, Suite 600
San Francisco, CA 94111
P: 415.837.0700

MEP / FIRE / TELECOM / SECURITY:
GUTTMANN & BLAEVOET
2351 Powell Street
San Francisco, CA 94133
P: 415.655.4000

AQUATICS:
AQUATIC DESIGN GROUP
2226 Faraday Avenue
Carlsbad, CA 92008
P: 760.438.8400

SPECIFICATIONS:
TOPFLIGHT SPECS
49 Geary Street, Suite 230
San Francisco, CA 94108-5748
P: 415.546.6033

REVISION

NUMBER	DATE	DESCRIPTION

ISSUE:
100% DESIGN DEVELOPMENT

DATE:
APRIL 30, 2022

STAMP:

NOT FOR CONSTRUCTION

SHEET TITLE:
DETAILS

SHEET NUMBER:
AP-5

LEGEND

——EJ——	=	EXPANSION JOINT
——CJ——	=	CONSTRUCTION JOINT
——TSD——	=	TOP OF SLOT DRAIN
TCO	=	TOP OF CLEAN-OUT
AL	=	ACCESSIBLE LIFT
HB	=	HOSE BIBB
SCA	=	SURGE CHANBER ACCESS COVER
SJ	=	SPRAY JET
CW	=	COLD WATER
SL	=	SLOPE DIRECTION
WL	=	WATERLEVEL
TD	=	TOP OF DECK
T.F.F.	=	TOP OF FINISHED FLOOR
I.E.	=	INVERT ELEVATION
P.O.C.	=	POINT OF CONNECTION
SD	=	STORM DRAIN
TB	=	TOP OF BENCH
TAD	=	TOP OF AREA DRAIN

SWIMMING POOL DATA

SURFACE AREA	=	6,949 SQ. FT.
PERIMETER	=	380 FT.
DEPTH	=	3'-6" TO 12'-6"
VOLUME	=	412,132 GAL.
6 HR TURNOVER	=	1,145 GPM

ACTIVITY POOL DATA

SURFACE AREA	=	2,620 SQ. FT.
PERIMETER	=	224 FT.
DEPTH	=	0'-0" TO 4'-3"
VOLUME	=	55,454 GAL.
3 HR TURNOVER	=	308 GPM

NOTES:

1. COORDINATE SIGNAGE PLACEMENT AND COLOR SCHEME WITH OWNER PRIOR TO INSTALLATION.
2. DECKS SHALL HAVE 1% MIN. SLOPE AND 1.8% MAX. SLOPE TO DRAINS.
3. ALL POOL DECKING SHALL BE NON-SLIP AND NON-ABRASIVE MEDIUM BROOM FINISH WITH NATURAL GRAY CONCRETE UNLESS OTHERWISE NOTED.
4. REFER TO ARCHITECTURAL PLANS FOR LOCATIONS AND QUANTITY OF REQUIRED EXITS, DRINKING FOUNTAINS, AND SANITARY FIXTURES.
5. THE POOL CANNOT BE WITHOUT AN APPROVED POOL ENCLOSURE AT ANY TIME, INCLUDING DURING CONSTRUCTION AND INSTALLATION OF THE NEW POOL ENCLOSURE.

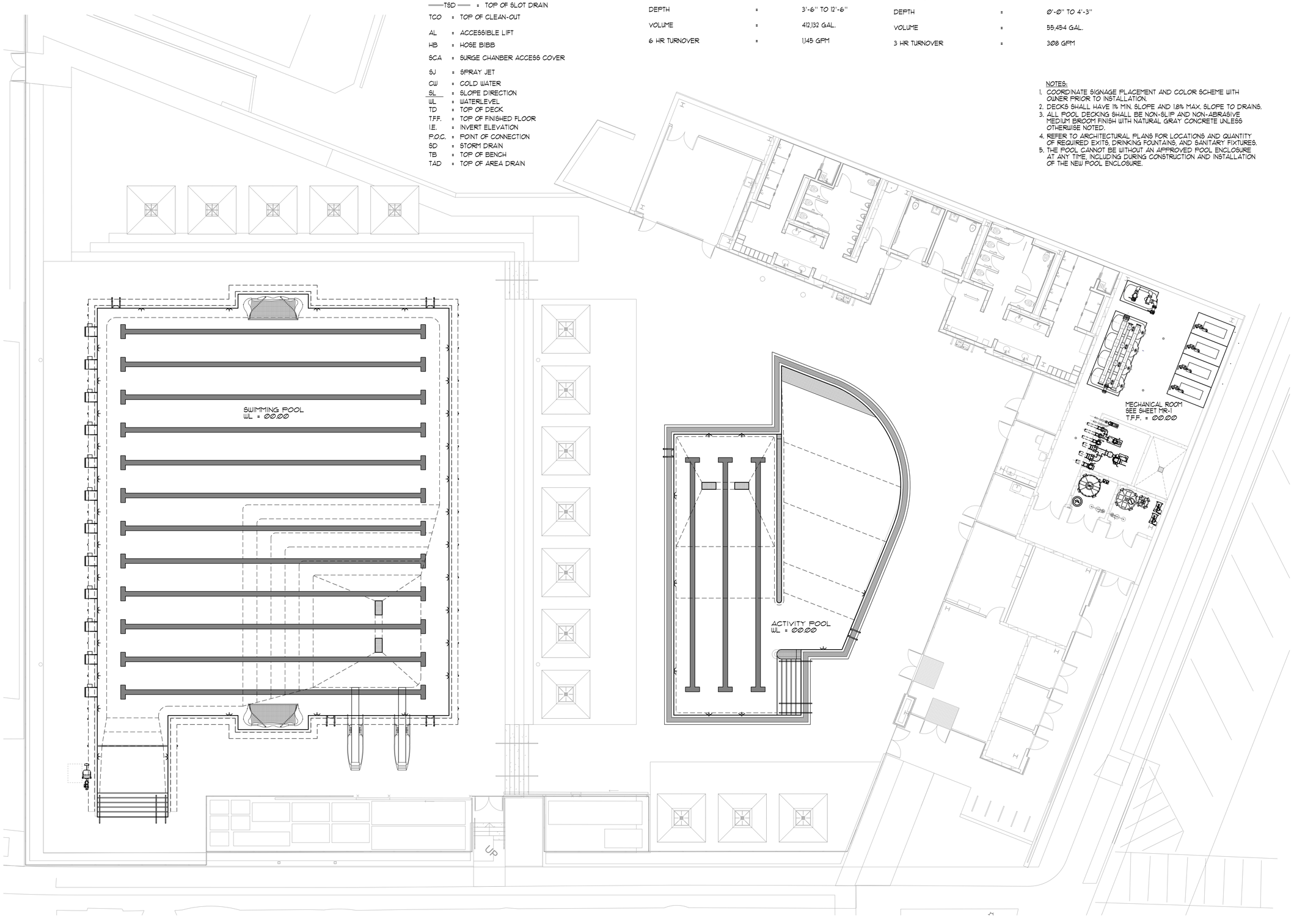

1 SWIMMING POOL / ACTIVITY POOL DECK PLAN 1/8"=1'-0"

els architecture+ urban design
2040 Addison St, Berkeley, CA 94704
510.549.2929 | elsarch.com

PROJECT:

PIEDMONT COMMUNITY POOL

777 MAGNOLIA AVENUE PIEDMONT, CA 94611

PROJECT NUMBER:
202115

CLIENT:
CITY OF PIEDMONT
120 VISTA AVENUE
PIEDMONT, CA 94611

PROJECT TEAM:

ARCHITECT:
ELS ARCHITECTURE AND URBAN DESIGN
2040 Addison Street
Berkeley, CA 94704
P: 510.549.2929

CIVIL ENGINEER:
BKF ENGINEERS
4670 Willow Road, Suite 250
Pleasanton, CA 94588
P: 925.396.7700

LANDSCAPE ARCHITECT:
SWA
2200 Bridgeway
Sausalito, CA 94965
P: 415.332.5100

STRUCTURAL ENGINEER:
FORELL/ELSESSER
160 Pine Street, Suite 600
San Francisco, CA 94111
P: 415.837.0700

MEP / FIRE / TELECOM / SECURITY:
GUTTMANN & BLAEVOET
2351 Powell Street
San Francisco, CA 94133
P: 415.655.4000

AQUATICS:
AQUATIC DESIGN GROUP
2226 Faraday Avenue
Carlsbad, CA 92008
P: 760.438.8400

SPECIFICATIONS:
TOPFLIGHT SPECS
49 Geary Street, Suite 230
San Francisco, CA 94108-5748
P: 415.546.6033

REVISION

NUMBER	DATE	DESCRIPTION

ISSUE:
100% DESIGN DEVELOPMENT

DATE:
APRIL 30, 2022

STAMP:

NOT FOR CONSTRUCTION

SHEET TITLE:
SWIMMING POOL/ ACTIVITY POOL DECK PLAN

SHEET NUMBER:
DP-1

SWIMMING POOL DATA

SURFACE AREA	=	6,949 SQ. FT.
PERIMETER	=	380 FT.
DEPTH	=	3'-6" TO 12'-6"
VOLUME	=	412,132 GAL.
6 HR TURNOVER	=	1,145 GPM

HEALTH DEPARTMENT NOTES:

1. SWIMMING POOL PLASTER COLOR SHALL BE WHITE WITH NO LETTERS, MARKINGS OR DESIGNS EXCEPT FOR SAFETY MARKINGS.
2. 6" WATERLINE AND GUTTER CAP TILE SHALL BE GLOSSY SMOOTH AND OF A CONTRASTING COLOR TO THE POOL PLASTER, AROUND THE ENTIRE POOL PERIMETER.
3. ALL MARKERS LOCATED ON THE DECK SHALL BE SLIP RESISTANT. SLIP RESISTANT IS CONSIDERED A WET COEFFICIENT OF FRICTION OF 0.6 OR GREATER.
4. SEE SHEEET AQ 10.02 FOR ADDITIONAL ROPE ANCHOR LOCATIONS.
5. SIGNAGE AND PLASTIC CHAIN WITH CLIPS SHALL BE PROVIDED TO LIMIT DIVING OFF SPRING BOARDS DURING TIMES WHEN THE BULKHEAD IS NOT IN DIVING POSITIONS. SIGNAGE SHALL BE A MIN 4" LETTERING STATING 'KEEP OFF, NO DIVING' PROVIDED FOR ALL ACCESS POINTS TO DIVING SPRING BOARDS. THREE (3) SIGNS AND PLASTIC CHAINS REQUIRED. CONTRACTOR SHALL SUBMIT PRODUCT FOR REVIEW DURING SUBMITTAL PROCESS.

LEGEND

15M	=	FIFTEEN METER TILE MARKER
DM	=	DEPTH MARKER
NR	=	'NO RUNNING'
AL	=	ACCESSIBLE LIFT
BS	=	BACKSTROKE STANCHION
SA	=	STANCHION ANCHOR
LAD	=	LADDER
RP	=	RACING PLATFORM
RA	=	ROPE ANCHOR
MGC	=	MOVEABLE GUARD CHAIR
GR	=	GRABRAIL
UL	=	UNDERWATER LIGHT
1M	=	ONE METER DIVE STAND
MD	=	MAIN DRAIN

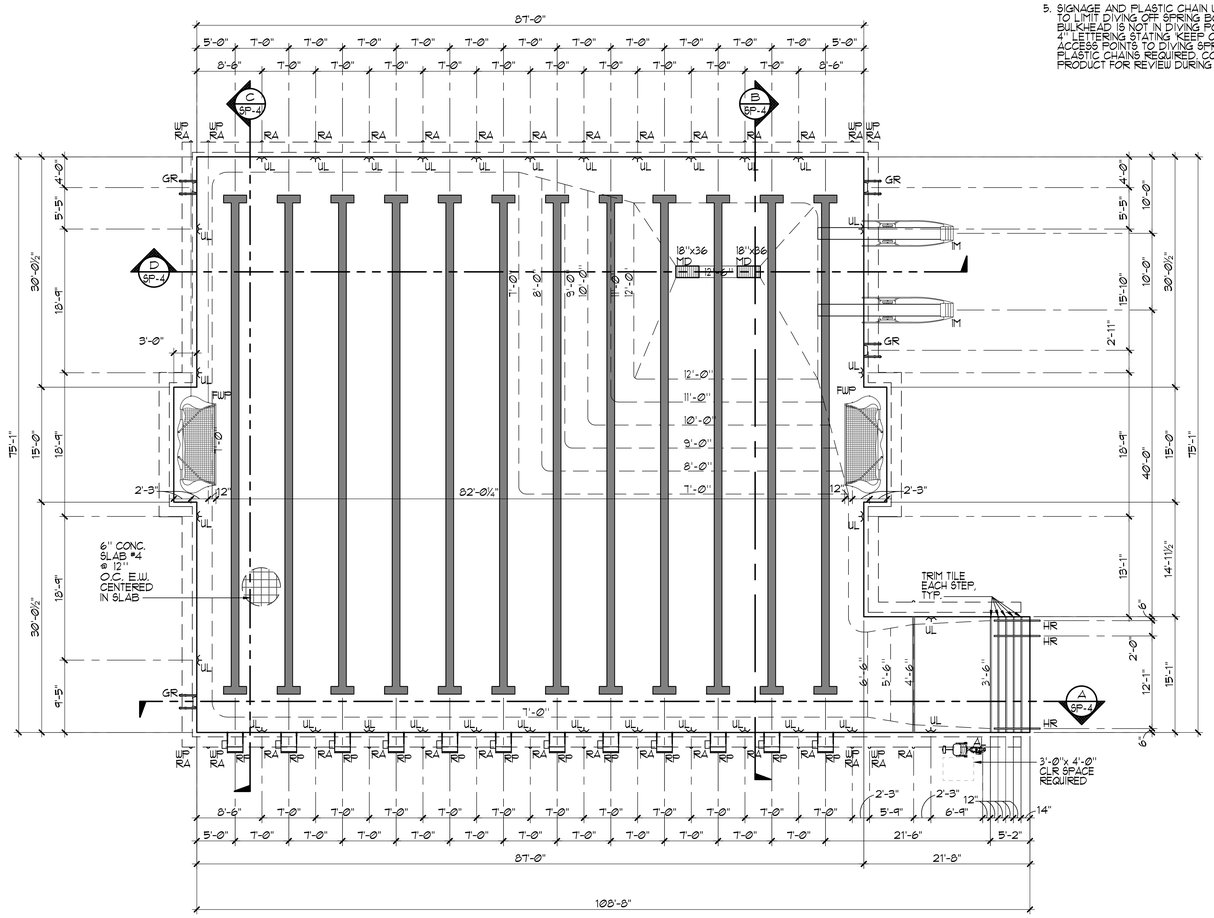

NORTH

1 SWIMMING POOL LAYOUT PLAN ¼" = 1'-0"

els architecture+ urban design
2040 Addison St, Berkeley, CA 94704
510.549.2929 | elsarch.com

PROJECT:

PIEDMONT COMMUNITY POOL

777 MAGNOLIA AVENUE PIEDMONT, CA 94611

PROJECT NUMBER: **202115**

CLIENT:

CITY OF PIEDMONT
120 VISTA AVENUE
PIEDMONT, CA 94611

PROJECT TEAM:

ARCHITECT:
ELS ARCHITECTURE AND URBAN DESIGN
2040 Addison Street
Berkeley, CA 94704
P: 510.549.2929

CIVIL ENGINEER:
BKF ENGINEERS
4670 Willow Road, Suite 250
Pleasanton, CA 94588
P: 925.396.7700

LANDSCAPE ARCHITECT:
SWA
2200 Bridgeway
Sausalito, CA 94965
P: 415.332.5100

STRUCTURAL ENGINEER:
FORELL/ELSESSER
160 Pine Street, Suite 600
San Francisco, CA 94111
P: 415.837.0700

MEP / FIRE / TELECOM / SECURITY:
GUTTMANN & BLAEVOET
2351 Powell Street
San Francisco, CA 94133
P: 415.655.4000

AQUATICS:
AQUATIC DESIGN GROUP
2226 Faraday Avenue
Carlsbad, CA 92008
P: 760.438.8400

SPECIFICATIONS:
TOPFLIGHT SPECS
49 Geary Street, Suite 230
San Francisco, CA 94108-5748
P: 415.546.6033

REVISION

NUMBER	DATE	DESCRIPTION

ISSUE: **100% DESIGN DEVELOPMENT**

DATE: **APRIL 30, 2022**

STAMP:

NOT FOR CONSTRUCTION

SHEET TITLE: **SWIMMING POOL LAYOUT PLAN**

SHEET NUMBER: **SP-1**

SWIMMING POOL DATA

SURFACE AREA	=	6,949 SQ. FT.
PERIMETER	=	380 FT.
DEPTH	=	3'-6" TO 12'-6"
VOLUME	=	412,132 GAL.
6 HR TURNOVER	=	1,145 GPM

SWIMMING POOL SURGE DATA

REQUIRED SURGE CAPACITY	=	6,949 GAL.
SURGE IN PERIMETER GUTTER	=	5,678 GAL.
8' x 8' SURGE IN SURGE CHAMBER	=	2,396 GAL.
TOTAL SUPPLIED SURGE	=	8,074 GAL.

∴8,074 GAL.> 6,949 GAL. +14% OK

ACTIVITY POOL DATA

SURFACE AREA	=	2,620 SQ. FT.
PERIMETER	=	224 FT.
DEPTH	=	0'-0" TO 4'-3"
VOLUME	=	55,454 GAL.
3 HR TURNOVER	=	308 GPM

ACTIVITY POOL SURGE DATA

REQUIRED SURGE CAPACITY	=	2,620 GAL.
SURGE IN PERIMETER GUTTER	=	1,887 GAL.
8' x 8' SURGE IN SURGE CHAMBER	=	2,396 GAL.
TOTAL SUPPLIED SURGE	=	4,283 GAL.

∴4,283 GAL. > 2,620 GAL. +39% OK

LEGEND

MD	=	MAIN DRAIN
FI	=	FLOOR INLET
GO	=	GUTTER OUTLET
AV	=	AIR VENT
SCA	=	SURGE CHAMBER ACCESS
BFV	=	BUTTERFLY VALVE
SJ	=	SPRAY JET
FV	=	FLOAT VALVE
A.F.F.	=	ABOVE FINISH FLOOR

NOTES:

1. PIPING ROUTES ARE SCHEMATIC IN NATURE AND SHOWN ON PLANS FOR CLARITY. CONTRACTOR SHALL ROUTE PIPING ACCORDINGLY TO MEET NOTED INVERT ELEVATIONS. REFER TO REFERENCED DETAIL FOR PIPE SPACING REQUIREMENTS.
2. ALL BELOW GRADE POOL PIPING SHALL BE SCHEDULE 40 PVC AND ALL ABOVE GRADE POOL PIPING SHALL BE SCHEDULE 80 PVC.
3. COORDINATE ALL PIPING WITH SITE AND BUILDING UTILITIES INCLUDING PIPING, CONDUITS / STRUCTURES AND THE LIKE. COORDINATE ROUTING OF PIPING THROUGH STRUCTURAL SLAB. ALL PIPING SHALL HAVE UNIFORM SLOPE IN ONE DIRECTION.
4. SURGE CHAMBER TEE SUCTION SHALL BE SET AT +6" A.F.F. MAINTAIN MAXIMUM SEPARATION BETWEEN SUCTION AND INFLUENT PIPING WITHIN THE SURGE CHAMBER.
5. EACH MAIN DRAIN SHALL BE EQUIPPED WITH HYDROSTATIC RELIEF VALVE PER RECOMMENDATIONS OF GEOTECHNICAL REPORT

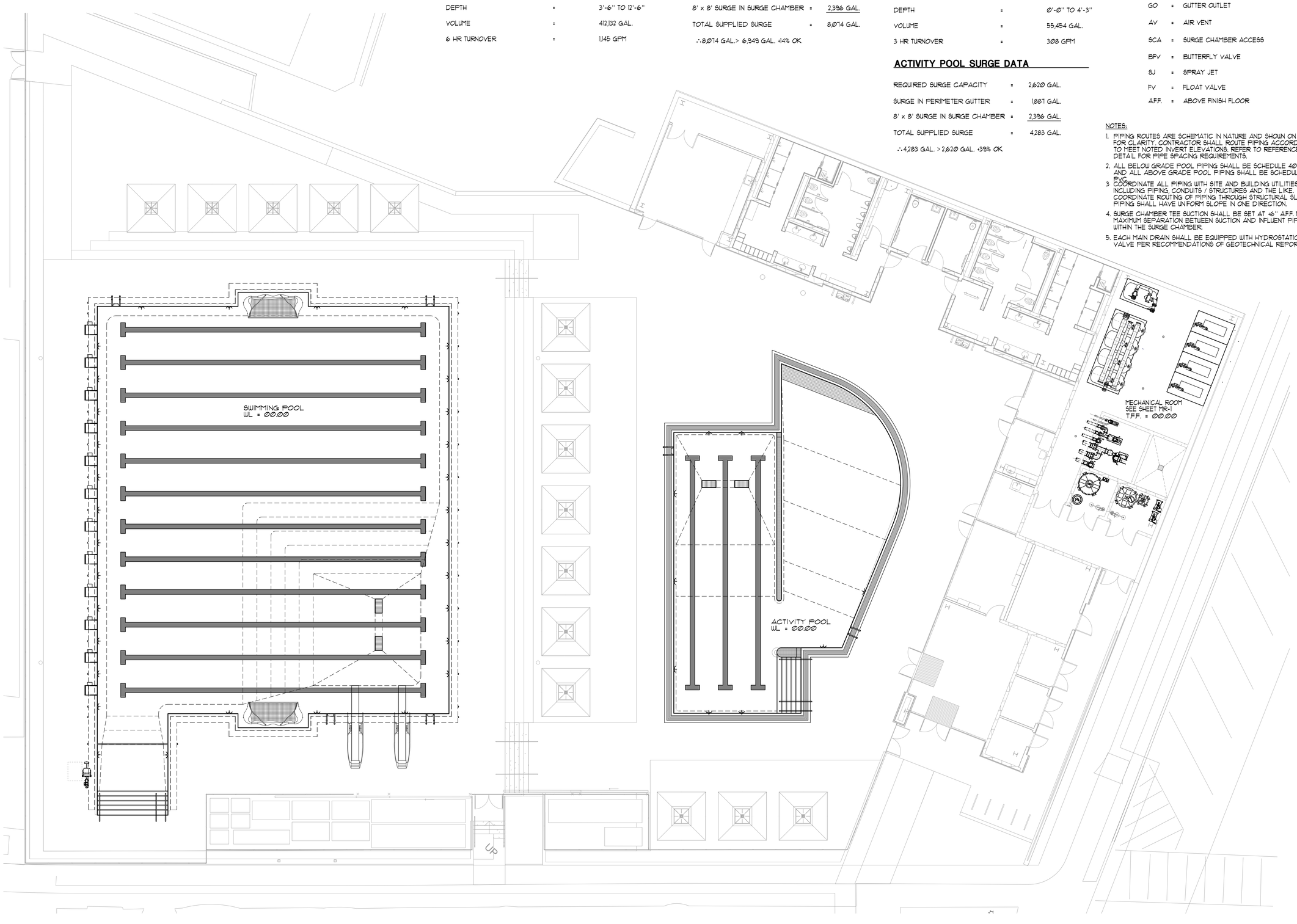

1 SWIMMING POOL / ACTIVITY POOL PIPING PLAN 1/8"=1'-0"

els architecture+ urban design
2040 Addison St, Berkeley, CA 94704
510.549.2929 | elsarch.com

PROJECT:

PIEDMONT COMMUNITY POOL

777 MAGNOLIA AVENUE PIEDMONT, CA 94611

PROJECT NUMBER: **202115**

CLIENT:

CITY OF PIEDMONT
120 VISTA AVENUE
PIEDMONT, CA 94611

PROJECT TEAM:

ARCHITECT:
ELS ARCHITECTURE AND URBAN DESIGN
2040 Addison Street
Berkeley, CA 94704
P: 510.549.2929

CIVIL ENGINEER:
BKF ENGINEERS
4670 Willow Road, Suite 250
Pleasanton, CA 94588
P: 925.396.7700

LANDSCAPE ARCHITECT:
SWA
2200 Bridgeway
Sausalito, CA 94965
P: 415.332.5100

STRUCTURAL ENGINEER:
FORELL/ELSESSER
160 Pine Street, Suite 600
San Francisco, CA 94111
P: 415.837.0700

MEP / FIRE / TELECOM / SECURITY:
GUTTMANN & BLAEVOET
2351 Powell Street
San Francisco, CA 94133
P: 415.655.4000

AQUATICS:
AQUATIC DESIGN GROUP
2226 Faraday Avenue
Carlsbad, CA 92008
P: 760.438.8400

SPECIFICATIONS:
TOPFLIGHT SPECS
49 Geary Street, Suite 230
San Francisco, CA 94108-5748
P: 415.546.6033

REVISION

NUMBER	DATE	DESCRIPTION

ISSUE: **100% DESIGN DEVELOPMENT**

DATE: **APRIL 30, 2022**

STAMP:

NOT FOR CONSTRUCTION

SHEET TITLE:
SWIMMING POOL/ ACTIVITY POOL PIPING PLAN

SHEET NUMBER:

SP-2

LEGEND

UL	=	UNDERWATER LIGHT
JB	=	JUNCTION BOX

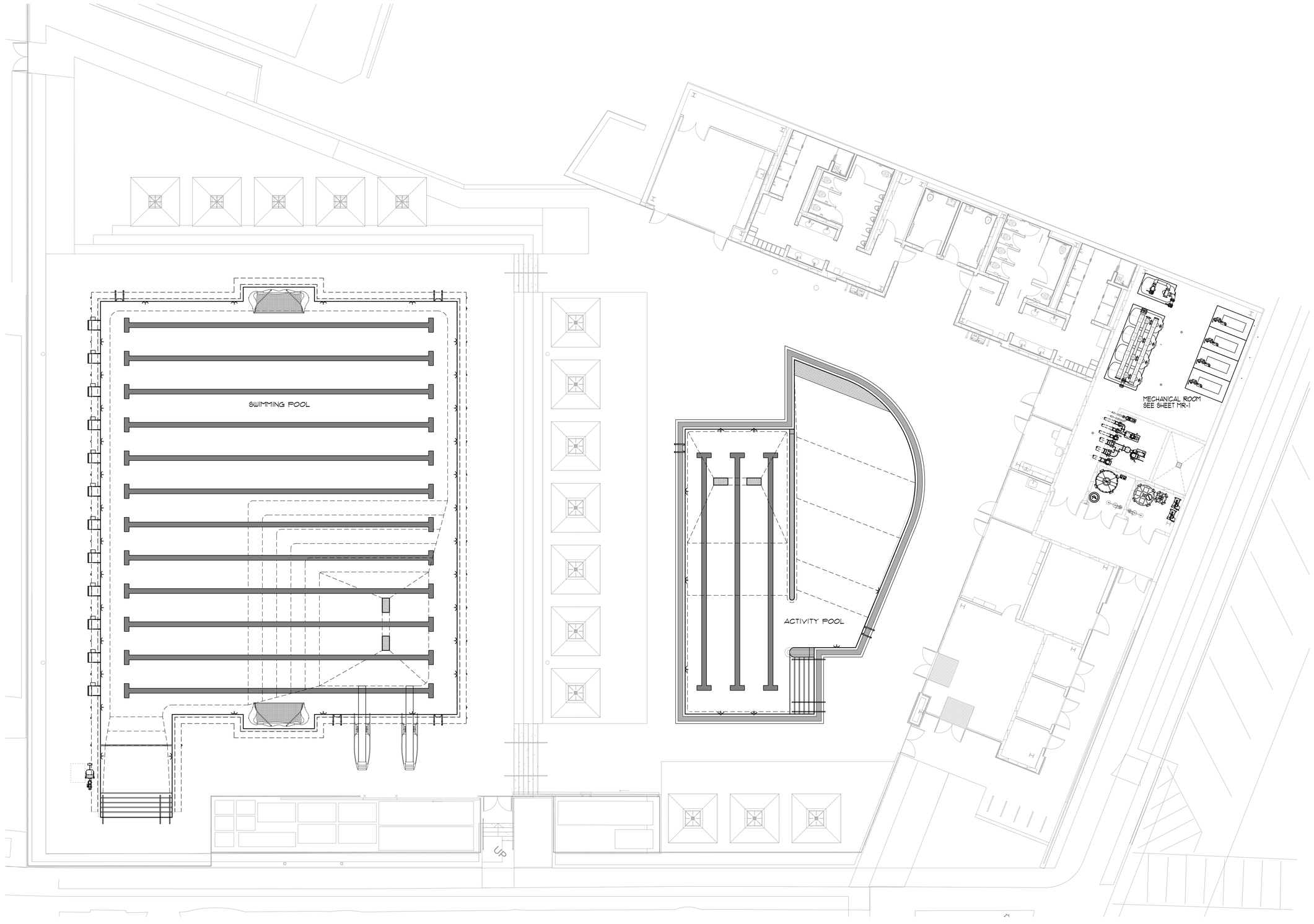

1 SWIMMING POOL / ACTIVITY POOL PIPING PLAN 1/8"=1'-0"

els architecture+ urban design
2040 Addison St, Berkeley, CA 94704
510.549.2929 | elsarch.com

PROJECT:

PIEDMONT COMMUNITY POOL

777 MAGNOLIA AVENUE PIEDMONT, CA 94611

PROJECT NUMBER:
202115

CLIENT:
CITY OF PIEDMONT
120 VISTA AVENUE
PIEDMONT, CA 94611

PROJECT TEAM:

ARCHITECT:
ELS ARCHITECTURE AND URBAN DESIGN
2040 Addison Street
Berkeley, CA 94704
P: 510.549.2929

CIVIL ENGINEER:
BKF ENGINEERS
4670 Willow Road, Suite 250
Pleasanton, CA 94588
P: 925.396.7700

LANDSCAPE ARCHITECT:
SWA
2200 Bridgeway
Sausalito, CA 94965
P: 415.332.5100

STRUCTURAL ENGINEER:
FORELL/ELSESSER
160 Pine Street, Suite 600
San Francisco, CA 94111
P: 415.837.0700

MEP / FIRE / TELECOM / SECURITY:
GUTTMANN & BLAEVOET
2351 Powell Street
San Francisco, CA 94133
P: 415.655.4000

AQUATICS:
AQUATIC DESIGN GROUP
2226 Faraday Avenue
Carlsbad, CA 92008
P: 760.438.8400

SPECIFICATIONS:
TOPFLIGHT SPECS
49 Geary Street, Suite 230
San Francisco, CA 94108-5748
P: 415.546.6033

REVISION

NUMBER	DATE	DESCRIPTION

ISSUE:
100% DESIGN DEVELOPMENT

DATE:
APRIL 30, 2022

STAMP:

NOT FOR CONSTRUCTION

SHEET TITLE:
SWIMMING POOL/ ACTIVITY POOL UNDERWATER LIGHT/ TIMING PLAN

SHEET NUMBER:
SP-3

A SWIMMING POOL SECTION 1/8"=1'-0"

B SWIMMING POOL SECTION 1/8"=1'-0"

C SWIMMING POOL SECTION 1/8"=1'-0"

D SWIMMING POOL SECTION 1/8"=1'-0"

els architecture+ urban design
2040 Addison St, Berkeley, CA 94704
510.549.2929 | elsarch.com

PROJECT:

PIEDMONT COMMUNITY POOL

777 MAGNOLIA AVENUE PIEDMONT, CA 94611

PROJECT NUMBER:
202115

CLIENT:
CITY OF PIEDMONT
120 VISTA AVENUE
PIEDMONT, CA 94611

PROJECT TEAM:

ARCHITECT:
ELS ARCHITECTURE AND URBAN DESIGN
2040 Addison Street
Berkeley, CA 94704
P: 510.549.2929

CIVIL ENGINEER:
BKF ENGINEERS
4670 Willow Road, Suite 250
Pleasanton, CA 94588
P: 925.396.7700

LANDSCAPE ARCHITECT:
SWA
2200 Bridgeway
Sausalito, CA 94965
P: 415.332.5100

STRUCTURAL ENGINEER:
FORELL/ELSESSER
160 Pine Street, Suite 600
San Francisco, CA 94111
P: 415.837.0700

MEP / FIRE / TELECOM / SECURITY:
GUTTMANN & BLAEVOET
2351 Powell Street
San Francisco, CA 94133
P: 415.655.4000

AQUATICS:
AQUATIC DESIGN GROUP
2226 Faraday Avenue
Carlsbad, CA 92008
P: 760.438.8400

SPECIFICATIONS:
TOPFLIGHT SPECS
49 Geary Street, Suite 230
San Francisco, CA 94108-5748
P: 415.546.6033

REVISION

NUMBER	DATE	DESCRIPTION

ISSUE:
100% DESIGN DEVELOPMENT

DATE:
APRIL 30, 2022

STAMP:

NOT FOR CONSTRUCTION

SHEET TITLE:
SWIMMING POOL SECTIONS

SHEET NUMBER:
SP-4

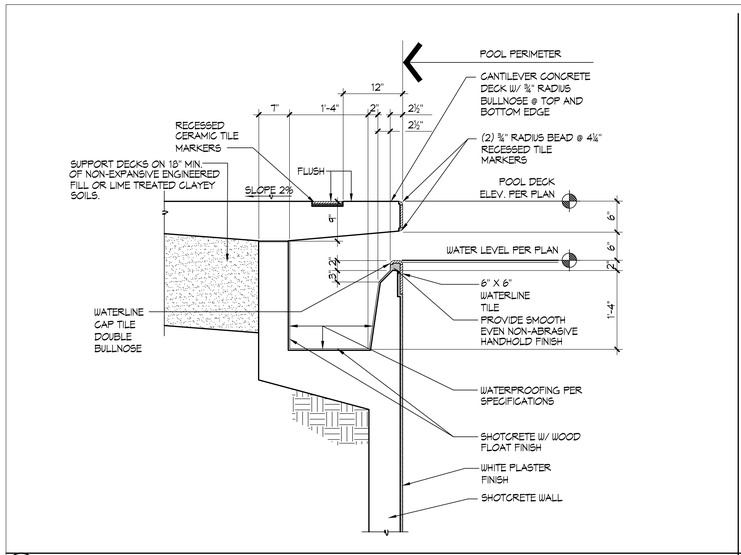

1 **TYPICAL GUTTER DETAIL** 1"=1'-0"

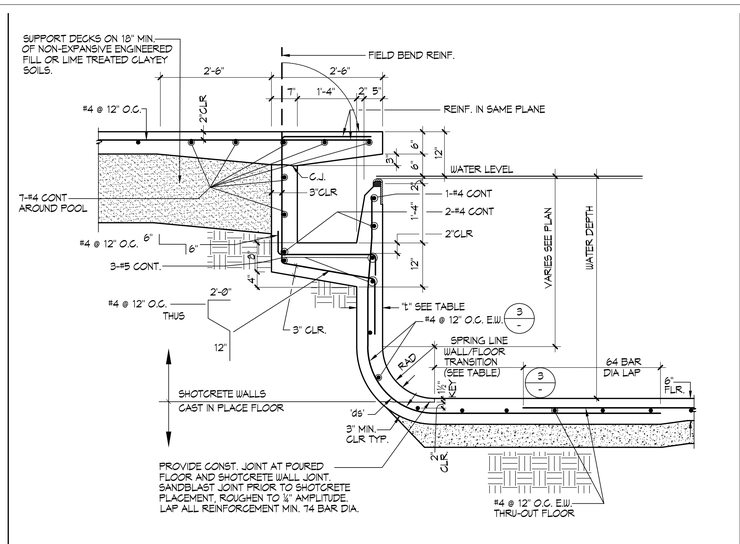

2 **POOL WALL 3'-6" TO 5'-0"** ¾"=1'-0"

3 **REINFORCEMENT TABLE**

WATER DEPTH	"t"	"ds"	RADIUS	VERTICAL REINF.	HORIZONTAL REINF.	TRANSITION TO FLOOR REINF. BEYOND END RADIUS
3'-6"	6"	3"	6"	#4 @ 12" O.C.	#4 @ 12" O.C.	24"
5'-0"	7"	4"	18"	#4 @ 12" O.C.	#4 @ 12" O.C.	24"
5'-1" TO 7'-0"	9"	6"	18" TO 2'-6"	#4 @ 6" O.C.	#4 @ 8" O.C.	24"
7'-1" TO 10'-0"	10"	7"	2'-6" TO 5'-0"	#5 @ 4" O.C.	#4 @ 8" O.C.	24"
10'-1" TO 13'-3"	17"	14"	5'-0" TO 6'-0"	#5 @ 4" O.C. REAR FACE #4 @ 12" O.C. FRONT FACE	#4 @ 12" O.C. REAR FACE #4 @ 12" O.C. FRONT FACE	24"

CONCRETE NOTES:

1. THE MINIMUM ULTIMATE COMPRESSIVE STRENGTH AT 28 DAYS WITH A 0.40-0.50 MAX. WATER/CEMENT RATIO
   POOL = 4000 PSI
   SLAB-ON-GRADE = 4000 PSI
2. CONTINUOUS INSPECTION BY AN APPROVED INSPECTOR IS REQUIRED OF ALL CONCRETE PLACEMENT.
3. ALL CEMENT USED SHALL CONFORM TO A.S.T.M. C-150 TYPE II
4. FINE AND COARSE AGGREGATE SHALL CONFORM TO A.S.T.M. C-33. MAXIMUM SIZE OF AGGREGATE TO BE 1".
5. CONCRETE MIX DESIGNS SHALL BE BASED UPON CBC SECTION 1905.
6. CONCRETE SHALL BE TESTED AND INSPECTED PER SECTION CBC 1705.3 AND 1905.
7. REMOVAL OF FORMS SHALL COMPLY WITH CBC SECTION 1905.
8. ALL REINFORCING SHALL BE ASTM A-615, GRADE 60, UNLESS OTHERWISE NOTED. LAPS SHALL BE 64 BAR DIA.

SHOTCRETE NOTES:

1. SHOTCRETE SHALL HAVE A MINIMUM COMPRESSIVE STRENGTH OF 4,000 PSI AT 28 DAYS. SHOTCRETE MATERIAL SHALL HAVE A WATER/CEMENT RATIO OF 0.40-0.50 PER ACI 506R, CHAPTER 6, PROPORTIONING AND PRECONSTRUCTION TESTING, SECTION 6.3.3, WET-MIX PROCESS.
2. CONTINUOUS INSPECTION BY AN APPROVED INSPECTOR IS REQUIRED OF ALL SHOTCRETE PLACEMENT.
3. ALL CEMENT USED SHALL CONFORM TO A.S.T.M. C-150 TYPE II
4. FINE AND COARSE AGGREGATE SHALL CONFORM TO A.S.T.M. C-33. MAXIMUM SIZE OF AGGREGATE TO BE ⅜".
5. SHOTCRETE MIX DESIGNS SHALL BE PER CBC SECTION 1908A.2.
6. SHOTCRETE SHALL BE TESTED AND INSPECTED PER CBC SECTION 1908A.5 AND 1908A.10 AND 1705A.3.
7. ANCHOR BOLTS, ANCHORS, DOWELS, INSERTS, ETC. SHALL BE SECURELY TIED IN PLACE PRIOR TO PLACING OF SHOTCRETE.
8. ALL REINFORCEMENT WITHIN SHOTCRETE SHALL MAINTAIN MINIMUM 2" CLEAR NON-CONTACT SPLICES.
9. THE FILM OF LAITANCE WHICH FORMS ON THE SURFACE OF THE SHOTCRETE SHALL BE REMOVED WITHIN APPROXIMATELY TWO HOURS AFTER APPLICATION BY BRUSHING WITH A STIFF BROOM. IF THIS IS NOT REMOVED WITHIN TWO HOURS, IT SHALL BE REMOVED BY THOROUGH WIRE BRUSHING OR SAND BLASTING. CONSTRUCTION JOINTS OVER EIGHT HOURS OLD SHALL BE THOROUGHLY CLEANED WITH AIR AND WATER PRIOR TO RECEIVING SHOTCRETE.
10. ALL REINFORCING SHALL BE ASTM A-615, GRADE 60, UNLESS OTHERWISE NOTED. LAPS SHALL BE 64 BAR DIA.

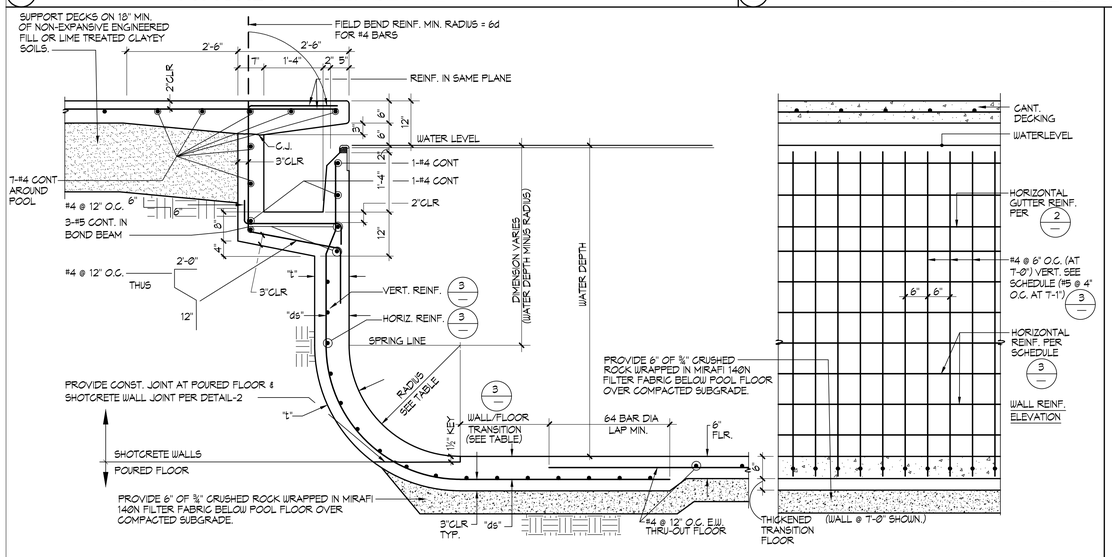

4 **POOL WALL 5'-1" TO 10'-0"** ¾"=1'-0"

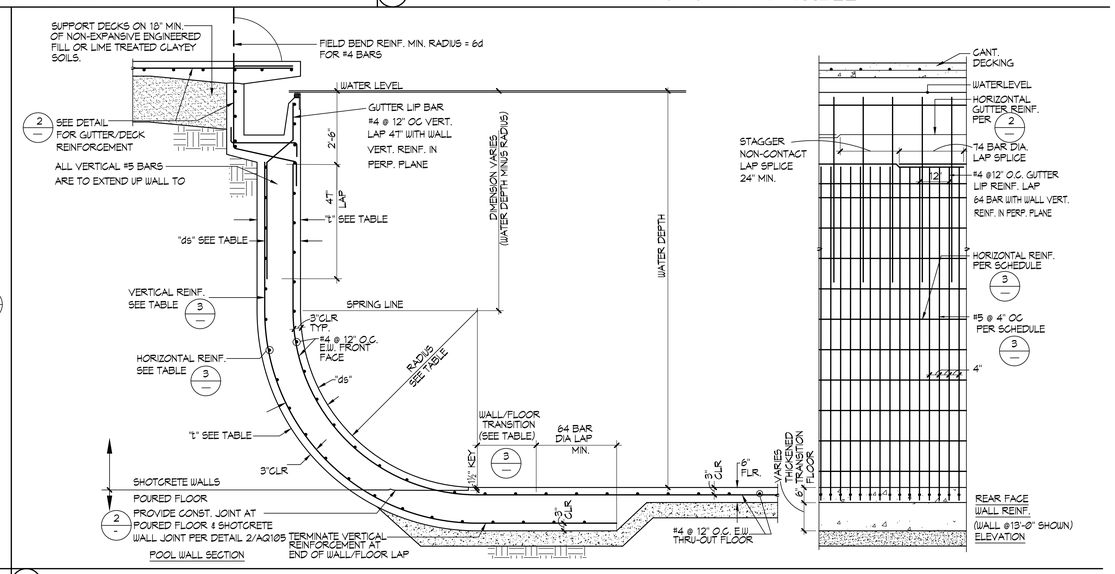

5 **POOL WALL 10'-1" TO 13'-3"** ½"=1'-0"

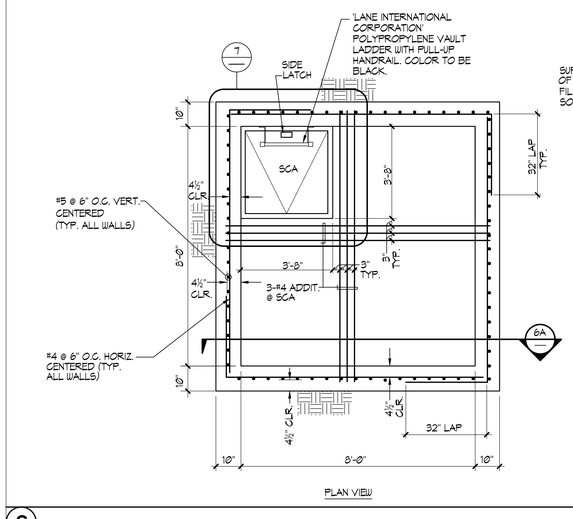

6 **SURGE CHAMBER** ½"=1'-0"

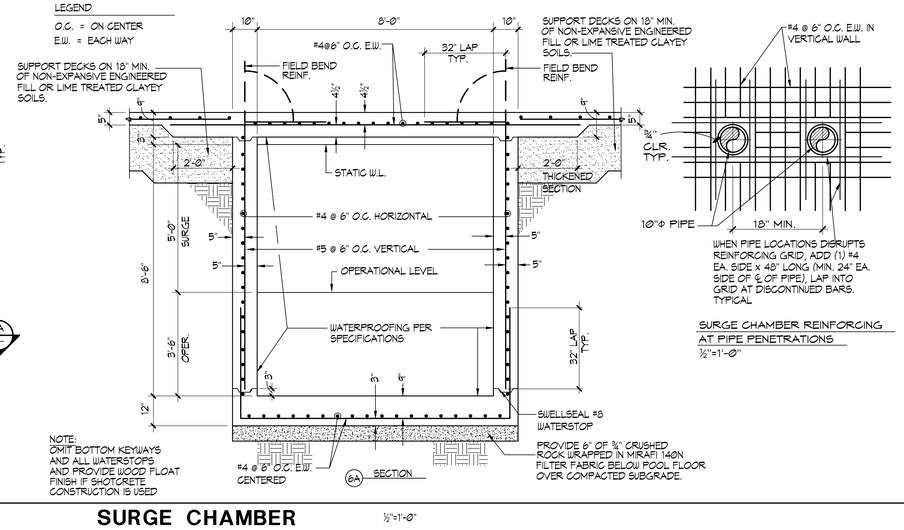

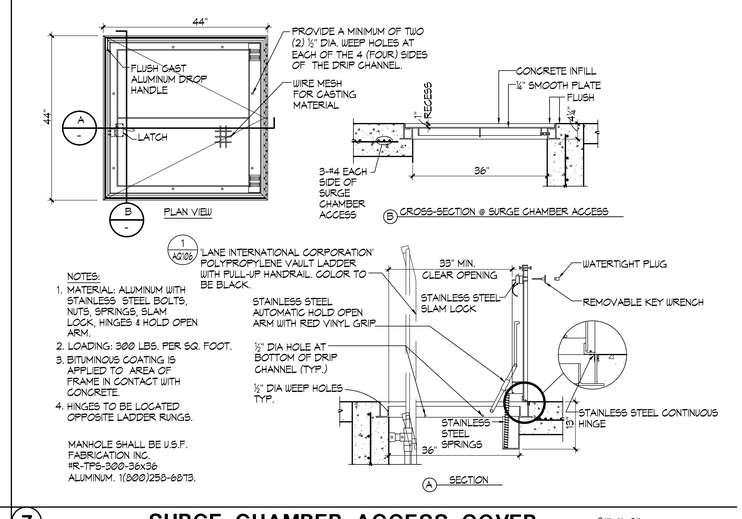

7 **SURGE CHAMBER ACCESS COVER** ¾"=1'-0"

els architecture+ urban design
2040 Addison St, Berkeley, CA 94704
510.549.2929 | elsarch.com

PROJECT:

PIEDMONT COMMUNITY POOL

777 MAGNOLIA AVENUE PIEDMONT, CA 94611

PROJECT NUMBER:
202115

CLIENT:
CITY OF PIEDMONT
120 VISTA AVENUE
PIEDMONT, CA 94611

PROJECT TEAM:

ARCHITECT:
ELS ARCHITECTURE AND URBAN DESIGN
2040 Addison Street
Berkeley, CA 94704
P: 510.549.2929

CIVIL ENGINEER:
BKF ENGINEERS
4670 Willow Road, Suite 250
Pleasanton, CA 94588
P: 925.396.7700

LANDSCAPE ARCHITECT:
SWA
2200 Bridgeway
Sausalito, CA 94965
P: 415.332.5100

STRUCTURAL ENGINEER:
FORELL/ELSESSER
160 Pine Street, Suite 600
San Francisco, CA 94111
P: 415.837.0700

MEP / FIRE / TELECOM / SECURITY:
GUTTMANN & BLAEVOET
2351 Powell Street
San Francisco, CA 94133
P: 415.655.4000

AQUATICS:
AQUATIC DESIGN GROUP
2226 Faraday Avenue
Carlsbad, CA 92008
P: 760.438.8400

SPECIFICATIONS:
TOPFLIGHT SPECS
49 Geary Street, Suite 230
San Francisco, CA 94108-5748
P: 415.546.6033

REVISION

NUMBER	DATE	DESCRIPTION

ISSUE:
100% DESIGN DEVELOPMENT

DATE:
APRIL 30, 2022

STAMP:
NOT FOR CONSTRUCTION

SHEET TITLE:
DETAILS

SHEET NUMBER:
SP-5

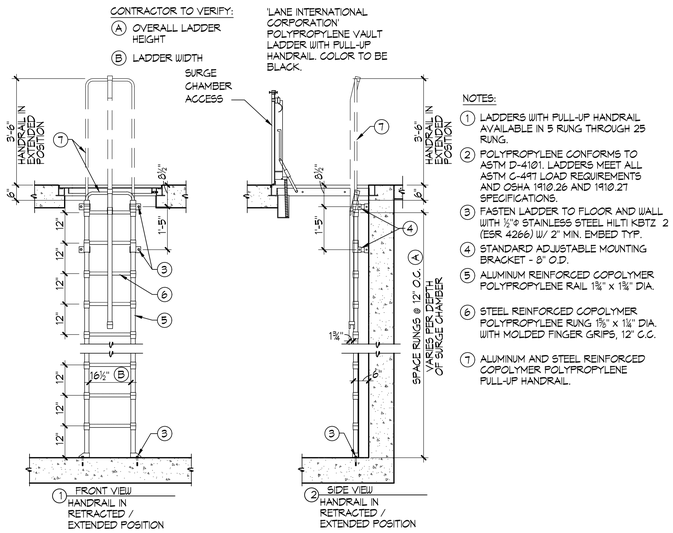

NOTES:

1. LADDERS WITH PULL-UP HANDRAIL AVAILABLE IN 5 RUNG THROUGH 25 RUNG.
2. POLYPROPYLENE CONFORMS TO ASTM D-4101. LADDERS MEET ALL ASTM C-497 LOAD REQUIREMENTS AND OSHA 1910.26 AND 1910.27 SPECIFICATIONS.
3. FASTEN LADDER TO FLOOR AND WALL WITH ½"ø STAINLESS STEEL HILTI KBTZ 2 (ESR 4266) W/ 2" MIN. EMBED TYP.
4. STANDARD ADJUSTABLE MOUNTING BRACKET - 8" O.D.
5. ALUMINUM REINFORCED COPOLYMER POLYPROPYLENE RAIL 1¾" x 1¾" DIA.
6. STEEL REINFORCED COPOLYMER POLYPROPYLENE RUNG 1⅝" x 1¼" DIA. WITH MOLDED FINGER GRIPS, 12" O.C.
7. ALUMINUM AND STEEL REINFORCED COPOLYMER POLYPROPYLENE PULL-UP HANDRAIL.

1 SURGE CHAMBER ACCESS LADDER ½" = 1'-0"

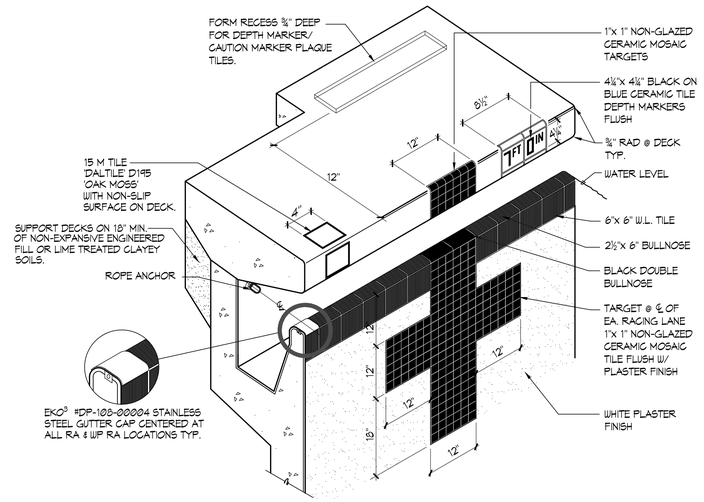

2 DEEP GUTTER PERSPECTIVE NO SCALE

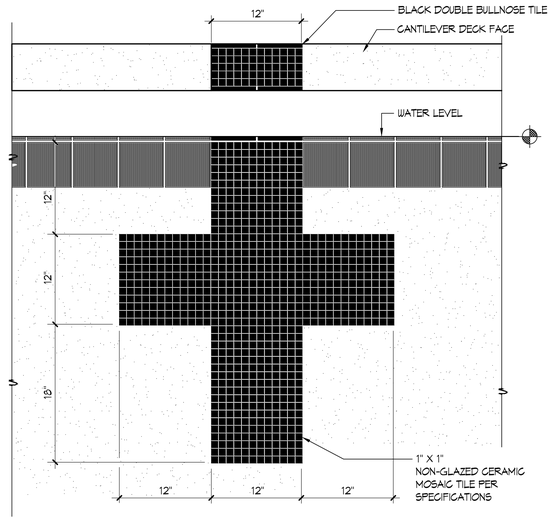

3 END WALL TARGET 1½" = 1'-0"

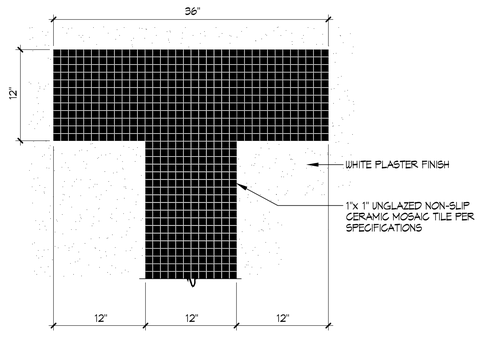

PLAN VIEW

4 RACING LANE LINE 1½"=1'-0"

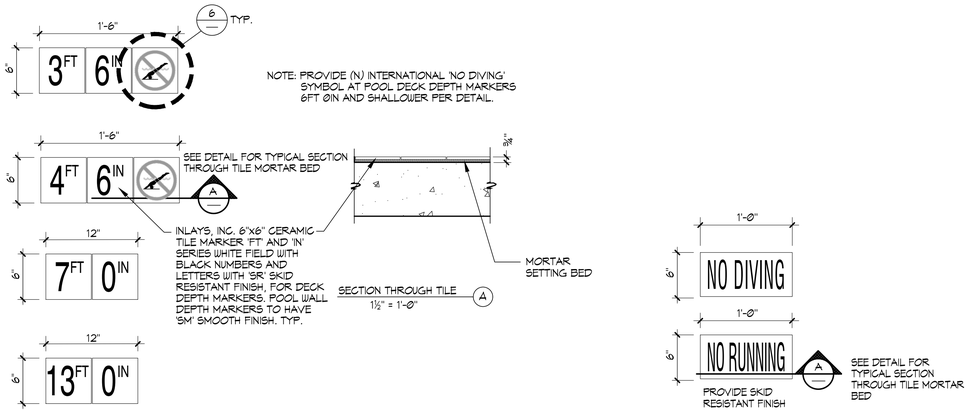

5 DEPTH AND CAUTION MARKERS 1½" = 1'-0"

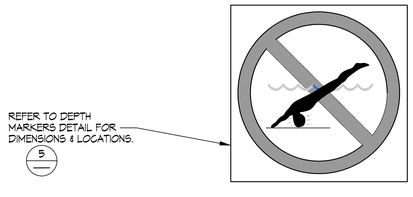

NOTE: PLACE IN DECK AT ALL DEPTH MARKER LOCATION OF 6'-0" OR LESS.

SILK SCREEN

1. 6"X6" 'INLAYS' C621500 DOUBLE GLAZED WHITE SLIP RESISTANT TILE TYP. OF (1) PIECE OVER. ¼" MORTAR BED WITH 1/16" GROUT JOINTS. SEE PLAN FOR LOCATION.
2. 1" WIDE RED CIRCLE WITH 1" WIDE RED DIAGONAL LINE.
3. ⅛" BLUE WATER.
4. 1/16" RED TICKS ABOUT THE HEAD.
5. TAN COLOR BODY WITH BLACK OUTLINE, HAIR AND TRUNKS.
6. ⅛" BLACK POOL FLOOR.

6 INTERNATIONAL "NO DIVING" MARKER 3"=1'-0"

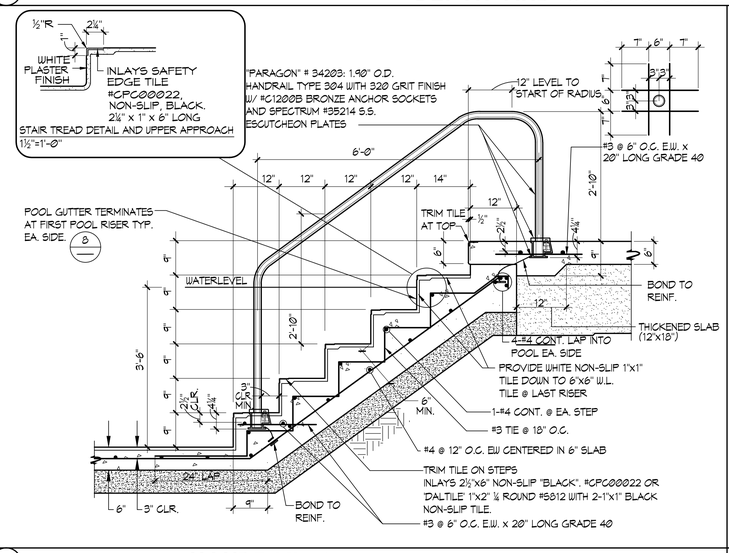

7 HANDRAIL DETAIL ¾"=1'-0"

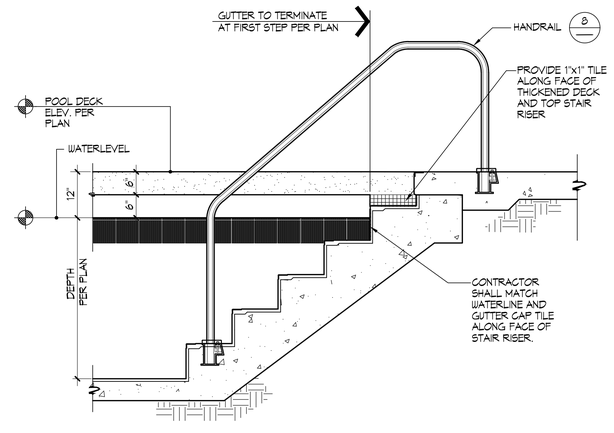

8 GUTTER EDGE AT STAIRS ¾"=1'-0"

els architecture+ urban design
2040 Addison St, Berkeley, CA 94704
510.549.2929 | elsarch.com

PROJECT:

PIEDMONT COMMUNITY POOL

777 MAGNOLIA AVENUE PIEDMONT, CA 94611

PROJECT NUMBER: **202115**

CLIENT:

CITY OF PIEDMONT
120 VISTA AVENUE
PIEDMONT, CA 94611

PROJECT TEAM:

ARCHITECT:
ELS ARCHITECTURE AND URBAN DESIGN
2040 Addison Street
Berkeley, CA 94704
P: 510.549.2929

CIVIL ENGINEER:
BKF ENGINEERS
4670 Willow Road, Suite 250
Pleasanton, CA 94588
P: 925.396.7700

LANDSCAPE ARCHITECT:
SWA
2200 Bridgeway
Sausalito, CA 94965
P: 415.332.5100

STRUCTURAL ENGINEER:
FORELL/ELSESSER
160 Pine Street, Suite 600
San Francisco, CA 94111
P: 415.837.0700

MEP / FIRE / TELECOM / SECURITY:
GUTTMANN & BLAEVOET
2351 Powell Street
San Francisco, CA 94133
P: 415.655.4000

AQUATICS:
AQUATIC DESIGN GROUP
2226 Faraday Avenue
Carlsbad, CA 92008
P: 760.438.8400

SPECIFICATIONS:
TOPFLIGHT SPECS
49 Geary Street, Suite 230
San Francisco, CA 94108-5748
P: 415.546.6033

REVISION

NUMBER	DATE	DESCRIPTION

ISSUE: **100% DESIGN DEVELOPMENT**

DATE: **APRIL 30, 2022**

STAMP: **NOT FOR CONSTRUCTION**

SHEET TITLE: **DETAILS**

SHEET NUMBER: **SP-6**

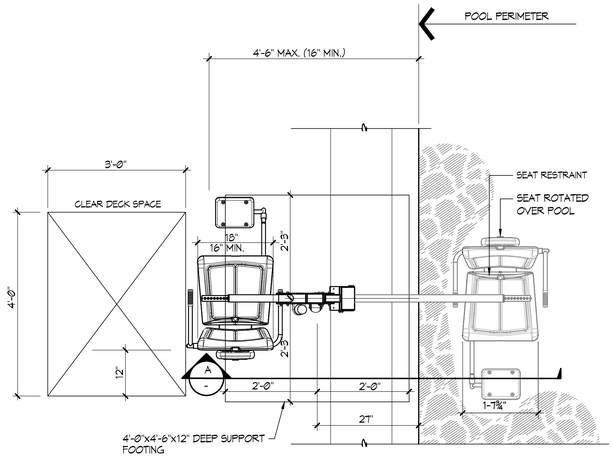

TOP VIEW

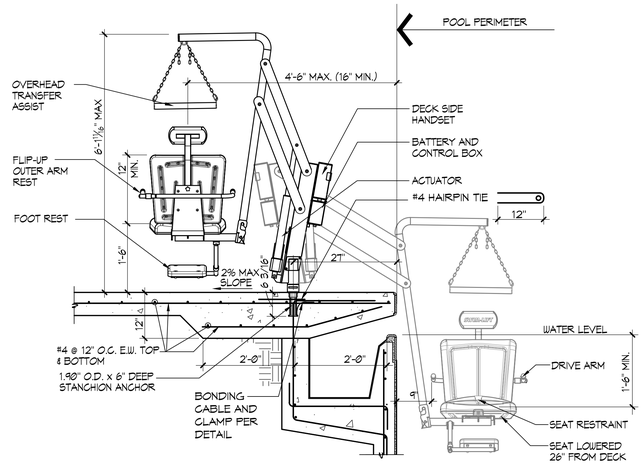

SIDE VIEW (A)

NOTES:

1. 'SPECTRUM' TRAVELER XRC 500 (350 lb. MIN. AND 500 lb. MAX. LIFTING CAPACITY)
2. GUSSET COVER PLATE TO BE ATTACHED REQUIRING A TOOL FOR REMOVAL.
3. CONTRACTOR SHALL PROVIDE COVER FOR LIFT 'SPECTRUM' #27365; EXTRA BATTERY PACK 'SPECTRUM' #13257; AND TRANSPORTER CART 'SPECTRUM' #26060.
4. UTILIZE OUTLET IN SWIM TEAM ROOM FOR ACCESSIBLE LIFT BATTERY CHARGE STATION.
5. POOL LIFT SHALL BE LOCATED WHERE THE WATER LEVEL IS AT LEAST 36" AND DOES NOT EXCEED 48" DEEP , UNLESS ENTIRE POOL IS GREATER THAT 48" DEEP. (CBC SECTION 11B-1009.2.1)
6. ON THE RAISED POSITION, THE CENTERLINE OF THE SEAT SHALL BE LOCATED OVER THE DECK AND 16" MINIMUM FROM THE EDGE OF THE POOL. THE DECK SURFACE BETWEEN THE CENTERLINE OF THE SEAT AND THE POOL EDGE SHALL HAVE A 2% MAX. SLOPE. (CBC SECTION 11B-1009.2.2)
7. CLEAR DECK SPACE SHALL BE PROVIDED ON SIDE OF SEAT OPPOSITE THE WATER PARALLEL TO THE WATER 36" WIDE X 48" MINIMUM FROM A LINE LOCATED 12" BEHIND THE REAR EDGE OF THE SEAT. THE CLEAR SPACE SHALL HAVE A 2% MAX. SLOPE. (CBC SECTION 11B-1009.2.3)
8. THE HEIGHT OF THE LIFT SEAT SHALL BE DESIGNED TO ALLOW A STOP AT 17" MIN. TO 19" MAX. MEASURED FROM THE DECK TO THE TOP OF THE SEAT SURFACE WHEN IN THE RAISED POSITION. (CBC SECTION 11B-1009.2.4)
9. THE SEAT SHALL BE RIGID AND 17" MIN. TO 19" MAX. WIDE. THE LIFT SEAT SHALL HAVE A BACK SUPPORT 12" MIN. TALL. (CBC SECTION 11B-1009.2.4)
10. FOOTRESTS SHALL BE PROVIDED, EXCEPT FOR SPA LIFTS, AND SHALL MOVE WITH THE SEAT. LIFT SHALL HAVE TWO ARMRESTS. THE ARMREST POSITIONED OPPOSITE THE WATER SHALL BE REMOVABLE OR SHALL FOLD CLEAR OF THE SEAT WHEN THE SEAT IS IN THE RAISED POSITION. (CBC SECTION 11B-1009.2.6)
11. THE LIFT SHALL BE CAPABLE OF UNASSISTED OPERATION FROM BOTH THE DECK AND WATER LEVELS. CONTROLS AND OPERATING MECHANISMS SHALL BE OPERABLE WITH ONE HAND AND SHALL BE UNOBSTRUCTED WHEN THE LIFT IS IN USE (CBC SECTION 11B-304.4). LIFT MUST BE STABLE AND NOT PERMIT UNINTENDED MOVEMENT WHEN A PERSON IS GETTING INTO OR OUT OF THE SEAT. (CBC SECTION 11B-1009.2.7)
12. THE LIFT SHALL BE DESIGNED SO THAT THE SEAT WILL SUBMERGE TO A WATER DEPTH OF 18" MIN. BELOW THE STATIONARY WATER LEVEL. (CBC SECTION 11B-1009.2.8)
13. LIFT SEAT MUST HAVE AN OCCUPANT RESTRAINT FOR USE BY THE OCCUPANT OF THE SEAT AND THE RESTRAINT MUST MEET THE STANDARDS FOR OPERABLE CONTROLS IN COMPLIANCE WITH CBC SECTION 11B-1009.2.4 AND SECTION 11B-309.

(1) ACCESSIBLE LIFT

¾"=1'-0"

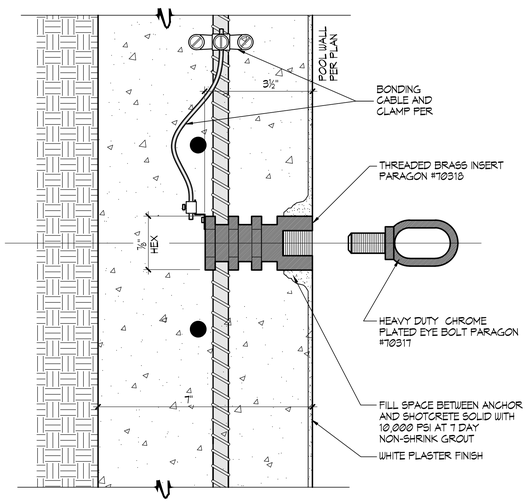

(2) ROPE ANCHOR

½" = 1"

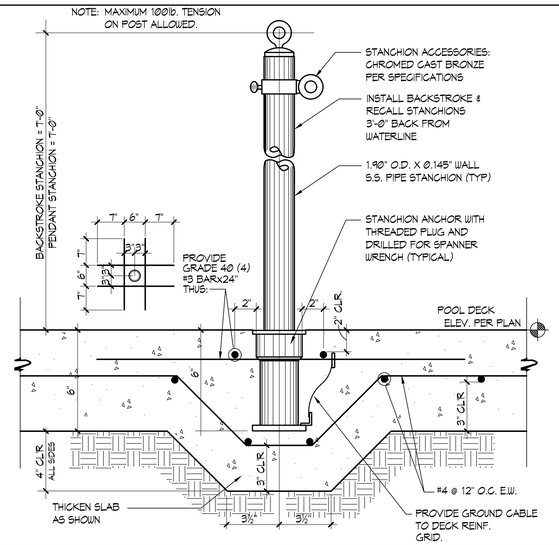

(3) STANCHION POST/ANCHOR

3"=1'-0"

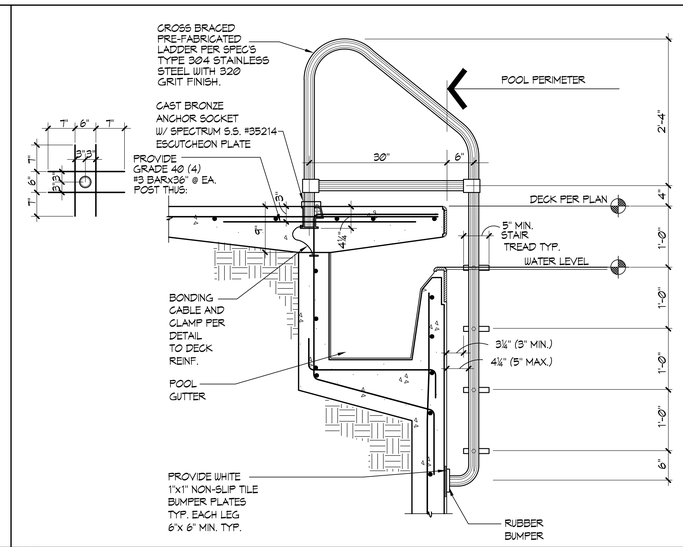

(4) POOL LADDER

1"=1'-0"

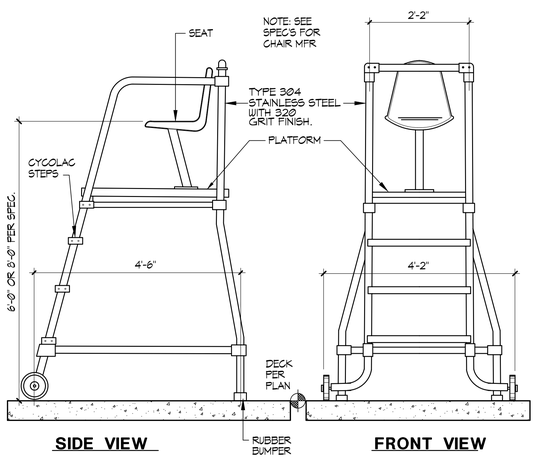

(5) MOVEABLE LIFEGUARD CHAIR

¾"=1'-0"

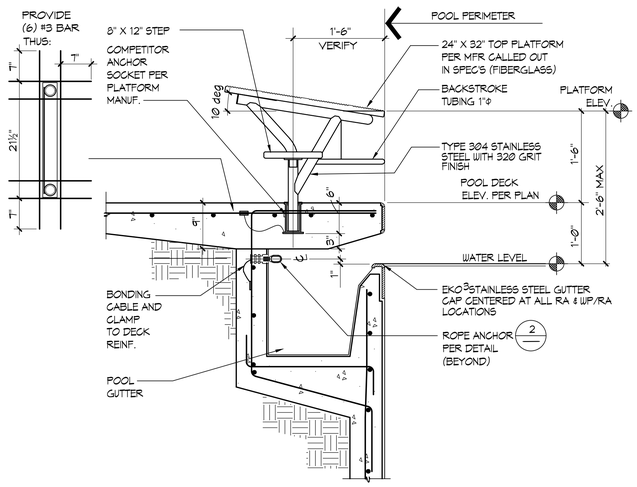

(6) RACING PLATFORM

1"=1'-0"

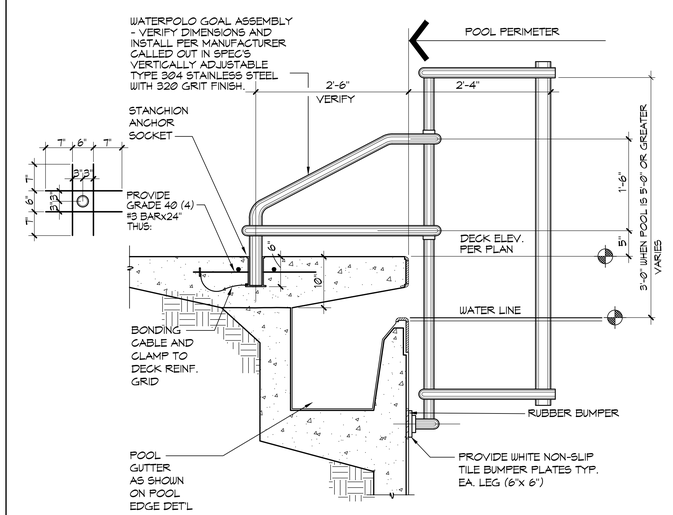

(7) WATERPOLO GOAL

1"=1'-0"

els architecture+ urban design
2040 Addison St, Berkeley, CA 94704
510.549.2929 | elsarch.com

PROJECT:

PIEDMONT COMMUNITY POOL

777 MAGNOLIA AVENUE PIEDMONT, CA 94611

PROJECT NUMBER:
202115

CLIENT:
CITY OF PIEDMONT
120 VISTA AVENUE
PIEDMONT, CA 94611

PROJECT TEAM:

ARCHITECT:
ELS ARCHITECTURE AND URBAN DESIGN
2040 Addison Street
Berkeley, CA 94704
P: 510.549.2929

CIVIL ENGINEER:
BKF ENGINEERS
4670 Willow Road, Suite 250
Pleasanton, CA 94588
P: 925.396.7700

LANDSCAPE ARCHITECT:
SWA
2200 Bridgeway
Sausalito, CA 94965
P: 415.332.5100

STRUCTURAL ENGINEER:
FORELL/ELSESSER
160 Pine Street, Suite 600
San Francisco, CA 94111
P: 415.837.0700

MEP / FIRE / TELECOM / SECURITY:
GUTTMANN & BLAEVOET
2351 Powell Street
San Francisco, CA 94133
P: 415.655.4000

AQUATICS:
AQUATIC DESIGN GROUP
2226 Faraday Avenue
Carlsbad, CA 92008
P: 760.438.8400

SPECIFICATIONS:
TOPFLIGHT SPECS
49 Geary Street, Suite 230
San Francisco, CA 94108-5748
P: 415.546.6033

REVISION

NUMBER	DATE	DESCRIPTION

ISSUE:
100% DESIGN DEVELOPMENT

DATE:
APRIL 30, 2022

STAMP:

NOT FOR CONSTRUCTION

SHEET TITLE:
DETAILS

SHEET NUMBER:
SP-7

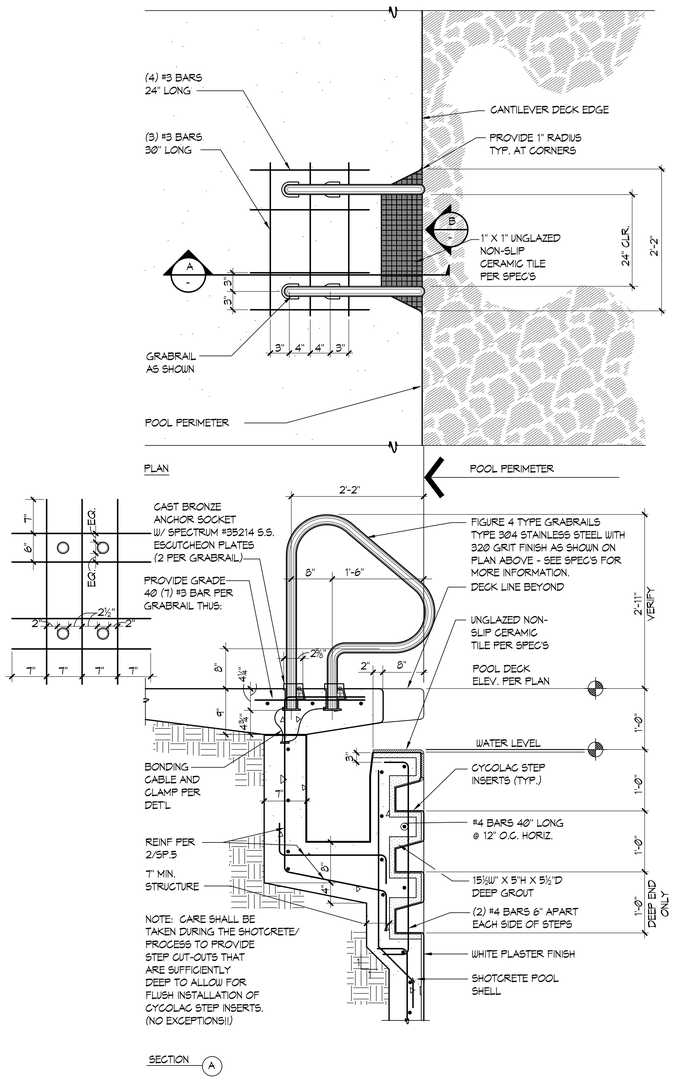

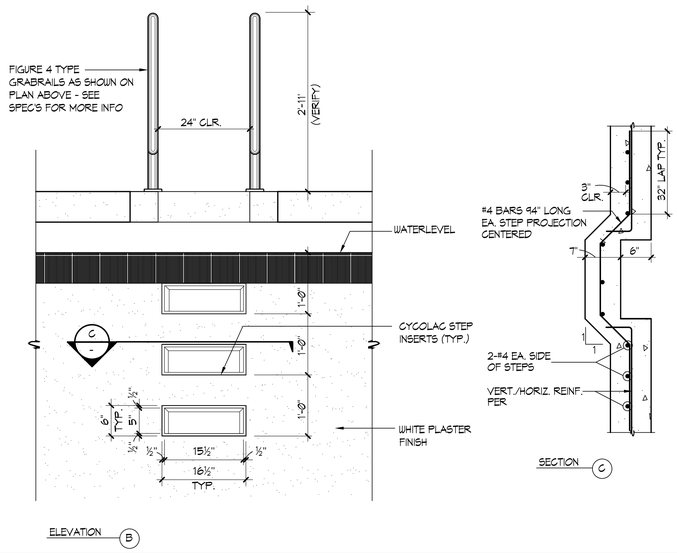

1 **GRABRAIL WITH STEPS** 1"=1'-0"

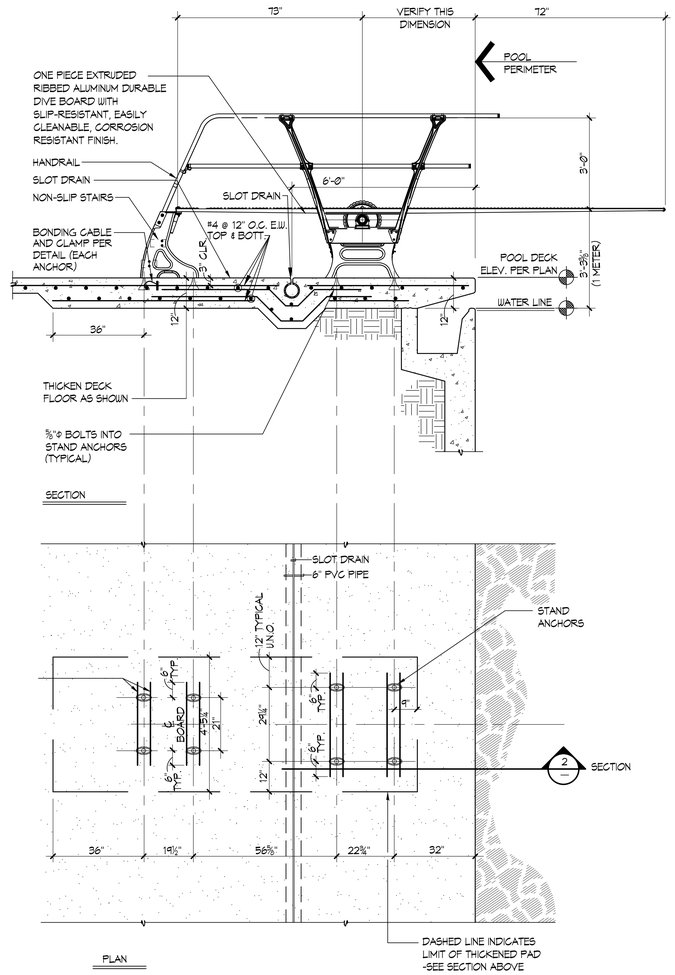

2 **1 METER DIVE STAND** ½"=1'-0"

NOT USED

3

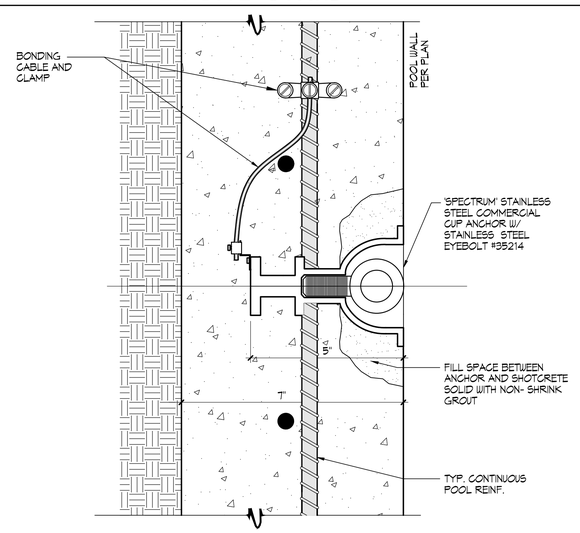

4 **CUP ANCHOR** ½" = 1"

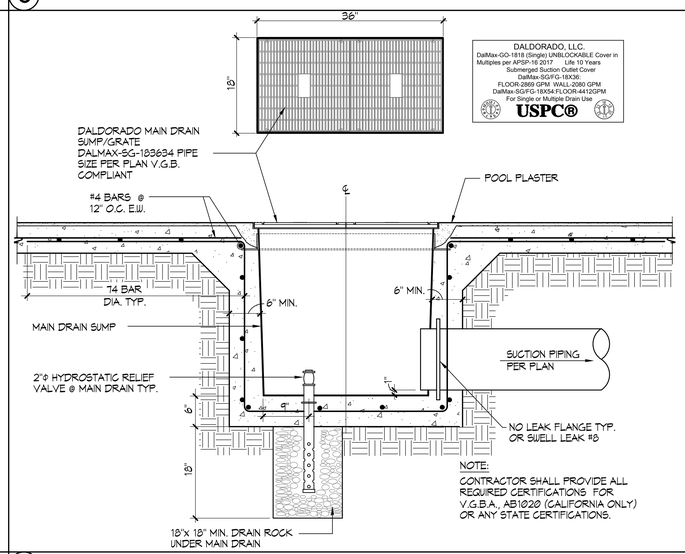

5 **MAIN DRAIN** 1" = 1'-0"

els architecture+ urban design
2040 Addison St, Berkeley, CA 94704
510.549.2929 | elsarch.com

PROJECT:

PIEDMONT COMMUNITY POOL

777 MAGNOLIA AVENUE PIEDMONT, CA 94611

PROJECT NUMBER:
202115

CLIENT:
CITY OF PIEDMONT
120 VISTA AVENUE
PIEDMONT, CA 94611

PROJECT TEAM:

ARCHITECT:
ELS ARCHITECTURE AND URBAN DESIGN
2040 Addison Street
Berkeley, CA 94704
P: 510.549.2929

CIVIL ENGINEER:
BKF ENGINEERS
4670 Willow Road, Suite 250
Pleasanton, CA 94588
P: 925.396.7700

LANDSCAPE ARCHITECT:
SWA
2200 Bridgeway
Sausalito, CA 94965
P: 415.332.5100

STRUCTURAL ENGINEER:
FORELL/ELSESSER
160 Pine Street, Suite 600
San Francisco, CA 94111
P: 415.837.0700

MEP / FIRE / TELECOM / SECURITY:
GUTTMANN & BLAEVOET
2351 Powell Street
San Francisco, CA 94133
P: 415.655.4000

AQUATICS:
AQUATIC DESIGN GROUP
2226 Faraday Avenue
Carlsbad, CA 92008
P: 760.438.8400

SPECIFICATIONS:
TOPFLIGHT SPECS
49 Geary Street, Suite 230
San Francisco, CA 94108-5748
P: 415.546.6033

REVISION

NUMBER	DATE	DESCRIPTION

ISSUE:
100% DESIGN DEVELOPMENT

DATE:
APRIL 30, 2022

STAMP:

NOT FOR CONSTRUCTION

SHEET TITLE:
DETAILS

SHEET NUMBER:
SP-8

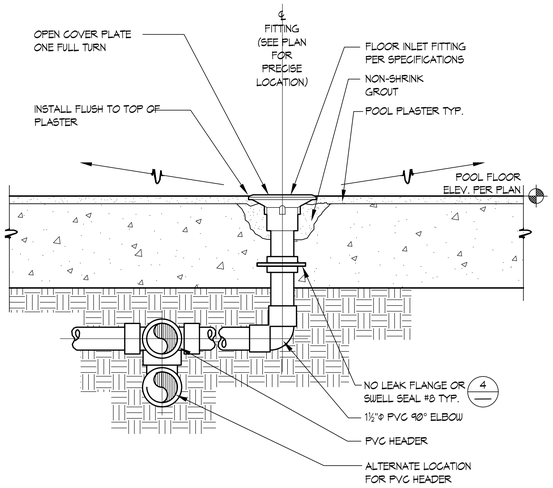

1 **FLOOR INLET** 3"=1'-0"

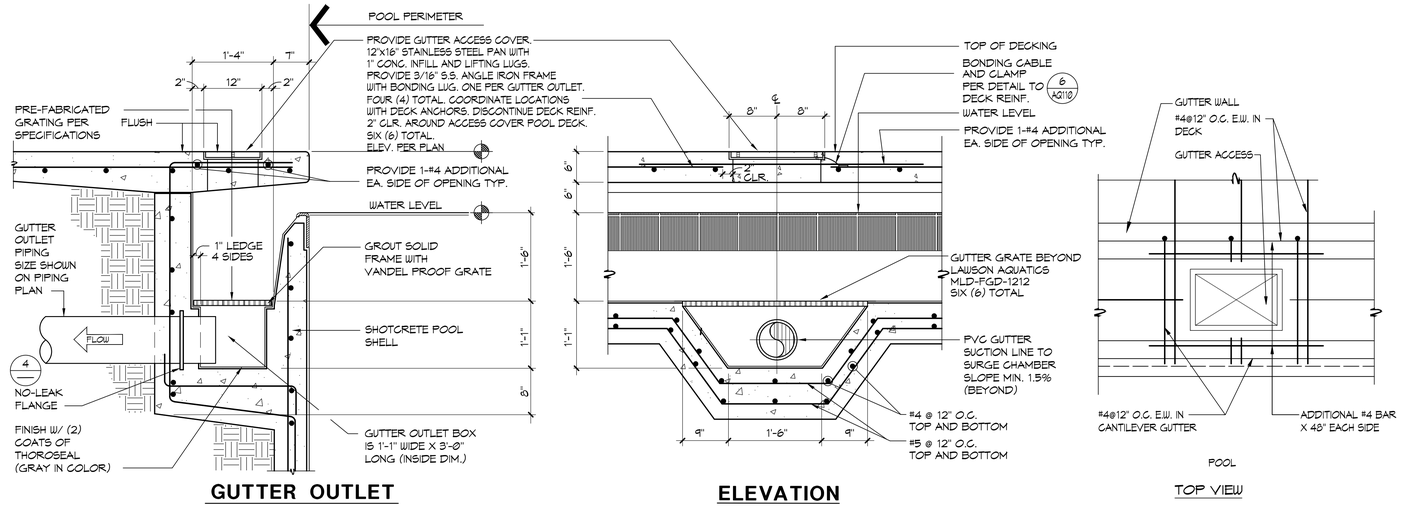

2 **GUTTER OUTLET** 1"=1'-0"

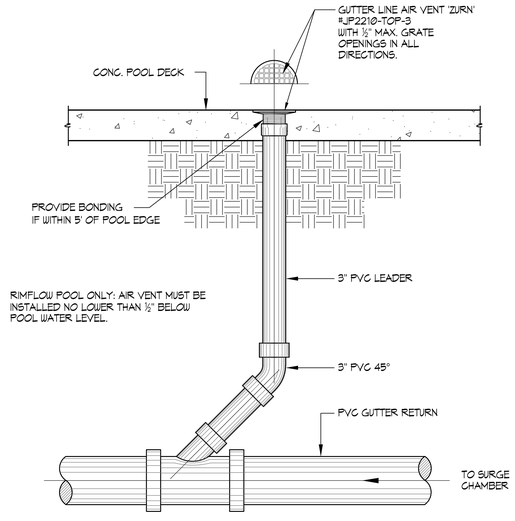

3 **AIR VENT** 1"=1'-0"

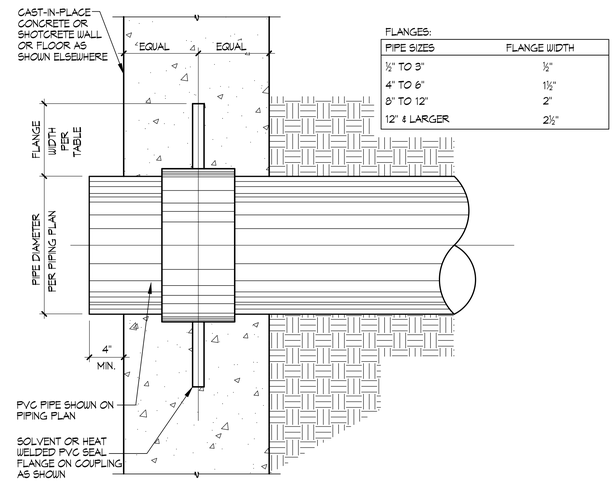

FLANGES:

PIPE SIZES	FLANGE WIDTH
½" TO 3"	½"
4" TO 6"	1½"
8" TO 12"	2"
12" & LARGER	2½"

4 **WATER STOP DETAIL** NO SCALE

NOT USED

5

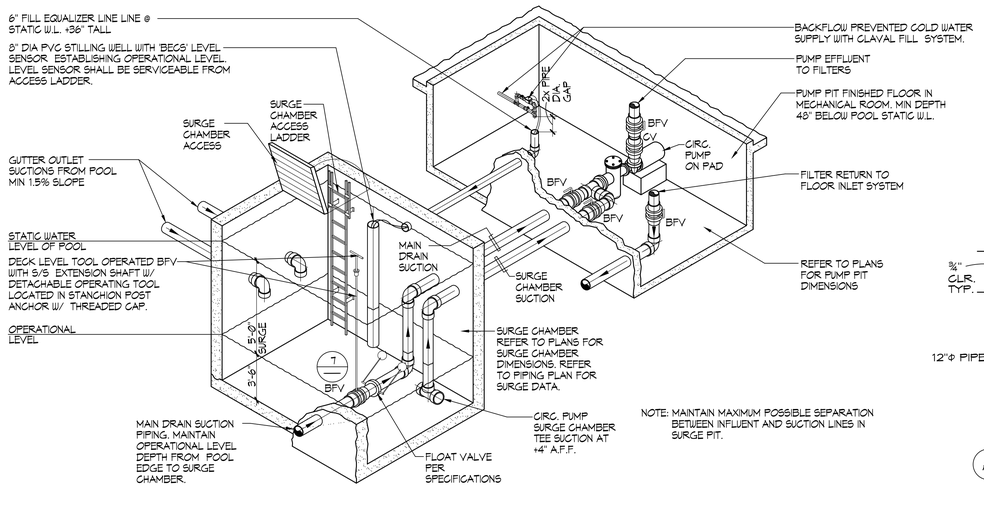

NOTE: MAINTAIN MAXIMUM POSSIBLE SEPARATION BETWEEN INFLUENT AND SUCTION LINES IN SURGE PIT.

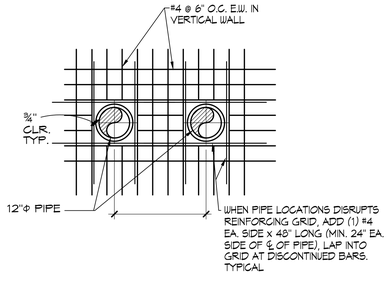

A SURGE CHAMBER REINFORCING AT PIPE PENETRATIONS
½"=1'-0"

6 **SURGE CHAMBER PIPING SCHEMATIC** NO SCALE

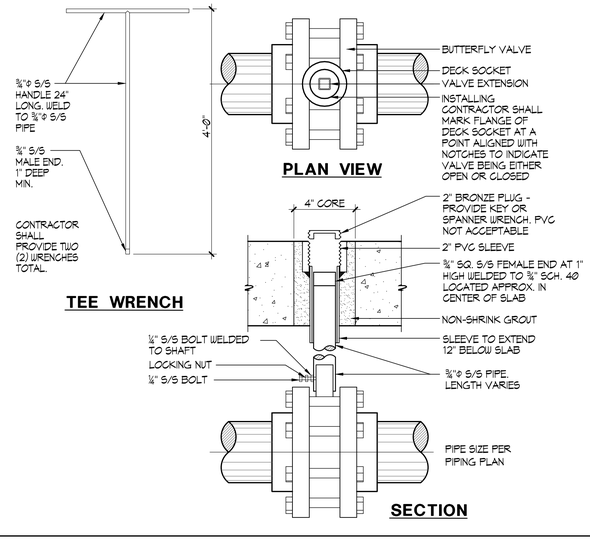

7 **SURGE CHAMBER BUTTERFLY VALVE / EXTENSION DETAIL** NO SCALE

els architecture+ urban design
2040 Addison St, Berkeley, CA 94704
510.549.2929 | elsarch.com

PROJECT:

PIEDMONT COMMUNITY POOL

777 MAGNOLIA AVENUE PIEDMONT, CA 94611

PROJECT NUMBER:
202115

CLIENT:
CITY OF PIEDMONT
120 VISTA AVENUE PIEDMONT, CA 94611

PROJECT TEAM:

ARCHITECT:
ELS ARCHITECTURE AND URBAN DESIGN
2040 Addison Street
Berkeley, CA 94704
P: 510.549.2929

CIVIL ENGINEER:
BKF ENGINEERS
4670 Willow Road, Suite 250
Pleasanton, CA 94588
P: 925.396.7700

LANDSCAPE ARCHITECT:
SWA
2200 Bridgeway
Sausalito, CA 94965
P: 415.332.5100

STRUCTURAL ENGINEER:
FORELL/ELSESSER
160 Pine Street, Suite 600
San Francisco, CA 94111
P: 415.837.0700

MEP / FIRE / TELECOM / SECURITY:
GUTTMANN & BLAEVOET
2351 Powell Street
San Francisco, CA 94133
P: 415.655.4000

AQUATICS:
AQUATIC DESIGN GROUP
2226 Faraday Avenue
Carlsbad, CA 92008
P: 760.438.8400

SPECIFICATIONS:
TOPFLIGHT SPECS
49 Geary Street, Suite 230
San Francisco, CA 94108-5748
P: 415.546.6033

REVISION

NUMBER	DATE	DESCRIPTION

ISSUE:
100% DESIGN DEVELOPMENT

DATE:
APRIL 30, 2022

STAMP:
NOT FOR CONSTRUCTION

SHEET TITLE:
DETAILS

SHEET NUMBER:
SP-9

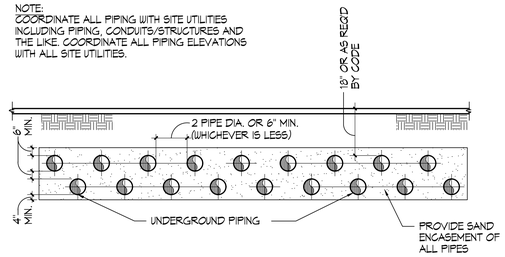

1 STACKED UNDERGROUND PIPING NO SCALE

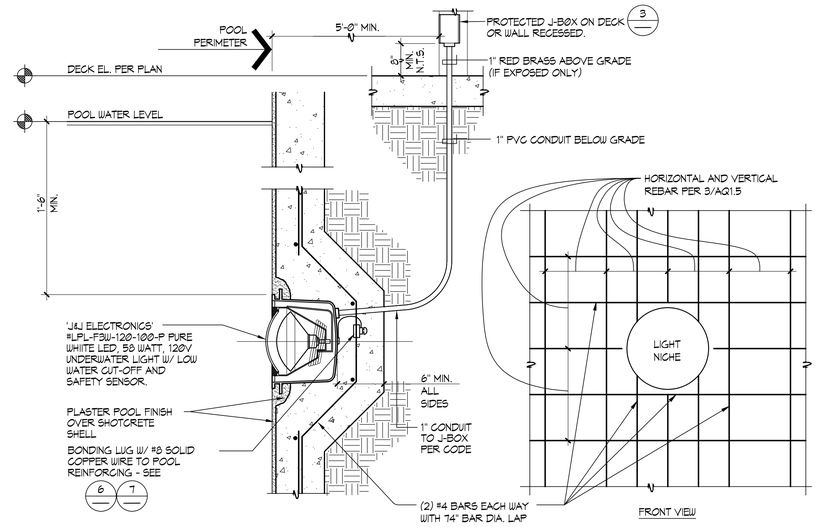

UNDERWATER LIGHT NOTES:

1. ALL CONDUITS IN POOL LIGHTING SYSTEM TO BE A MINIMUM OF 1"Ø.
2. CONDUCTORS TO POOL. J-BOXES SHALL BE MINIMUM 2-#8 & 1#8 (SEE UNDERWATER LIGHT PLAN) SOLID UNBROKEN TO MAIN PANEL ISOLATED GROUND BUSS. THIS BUSS IS TO BE CONNECTED WITH SOLID INSULATED #8 COPPER WIRE TO UFER & COLDWATER GROUNDING LUG ON GROUNDING BUSS. UPSIZE CONDUCTORS AS REQUIRED FOR HOMERUNS EXCEEDING 100'.
3. ALL BRASS POOL J-BOXES SHALL BE FLUSH MOUNTED IN WALLS. IF FLUSH MOUNTING IS NOT POSSIBLE THEN MOUNTING SHALL BE SURFACE MOUNTED AND CONCRETE ENCASED.
4. CONDUITS WHERE ALLOWED BY CODE SHALL BE P.V.C. (POLYVINYL CHLORIDE) FROM WET NICHES TO BRASS J-BOXES TO LIGHTING PANEL. ALL CONDUITS IN FREE AIR SPACE AND ALL RISERS SHALL BE RED BRASS TYPICAL. PVC CONDUITS SHALL BE SOLVENT WELDED WITH PURPLE PRIMER AND GRAY HEAVY BODIED GLUE.
5. LIGHTING CONTACTORS SHALL BE "ALLEN-BRADLEY" #500 L; OR EQUAL MOUNTED IN A NEMA 12 HINGED COVER - LOCKABLE ENCLOSURE. CONTACTORS TO BE SWITCHED BY MOMENTARY SWITCH EQUAL TO "HUBBELL" #1557 MOUNTED IN J-BOX IN MECHANICAL EQUIPMENT ROOM. REFER TO ELECTRICAL PLANS FOR LOCATION OF OWNER COORDINATED REMOTE UNDERWATER LIGHT SWITCH.
6. BRASS POOL J-BOXES SHALL BE "HYDREL" #1719 ; W/ 1" HUBS OR EQUAL. (NO DIE CAST BOXES).
7. STRINGS SHALL BE PULLED IN ALL CONDUITS PRIOR TO PLACEMENT OF CONCRETE.
8. LOCAL, COUNTY OR CITY CODES SHALL BE ADHERED TO, SPECIFICATIONS TO BE IN ACCORDANCE WITH SECTION 680 OF LATEST N.E.C. BOOK.
9. PROVIDE PULL BOXES AS MAY BE REQUIRED FOR RUNS EXCEEDING 150 FT. OR DUE TO CHANGES IN GRADE OR DIRECTION.
10. CONTRACTOR SHALL TEST UNDERWATER POOL LIGHT GFIC CIRCUITS AND PROVIDE LETTER TO OWNER/DSA UPON SUCCESSFUL TEST.
11. SEAL CONDUIT OPENING IN LIGHT NICHE WITH SILICON CAULKING AFTER LIGHT IS INSTALLED.
12. PRIOR TO LIGHT INSTALLATION, PROVIDE MINIMUM 10 PSI PRESSURE TEST ON ALL POOL LIGHT CONDUITS FOR FOUR (4) HOURS OBSERVED BY INSPECTOR OF RECORD. MAINTAIN PRESSURE UNTIL ALL DECKS ARE POURED.

2 UNDERWATER LED LIGHT 1½"=1'-0"

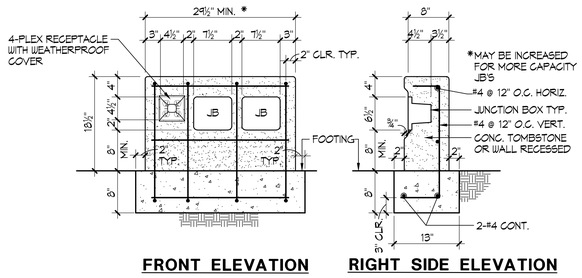

3 UNDERWATER LIGHT JUNCTION BOX CONCRETE SURROUND DETAIL 1"=1'-0"

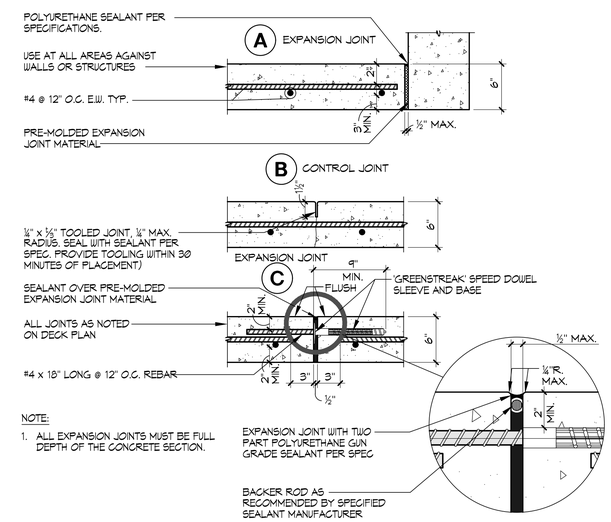

4 CONCRETE DECK JOINT DETAILS 1½"=1'-0"

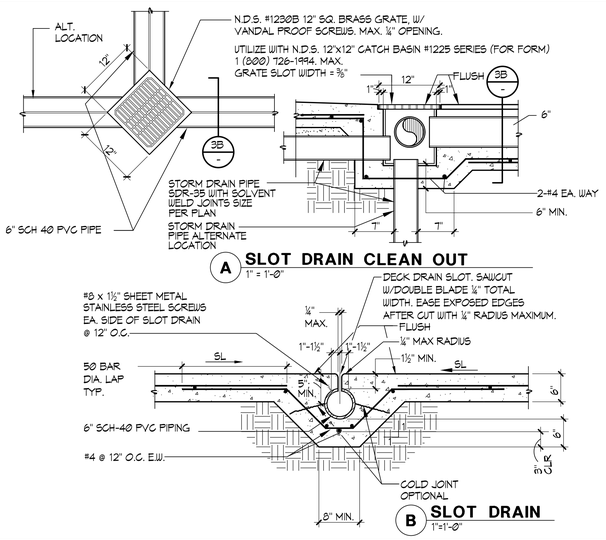

5 SLOT DRAIN 1"=1'-0"

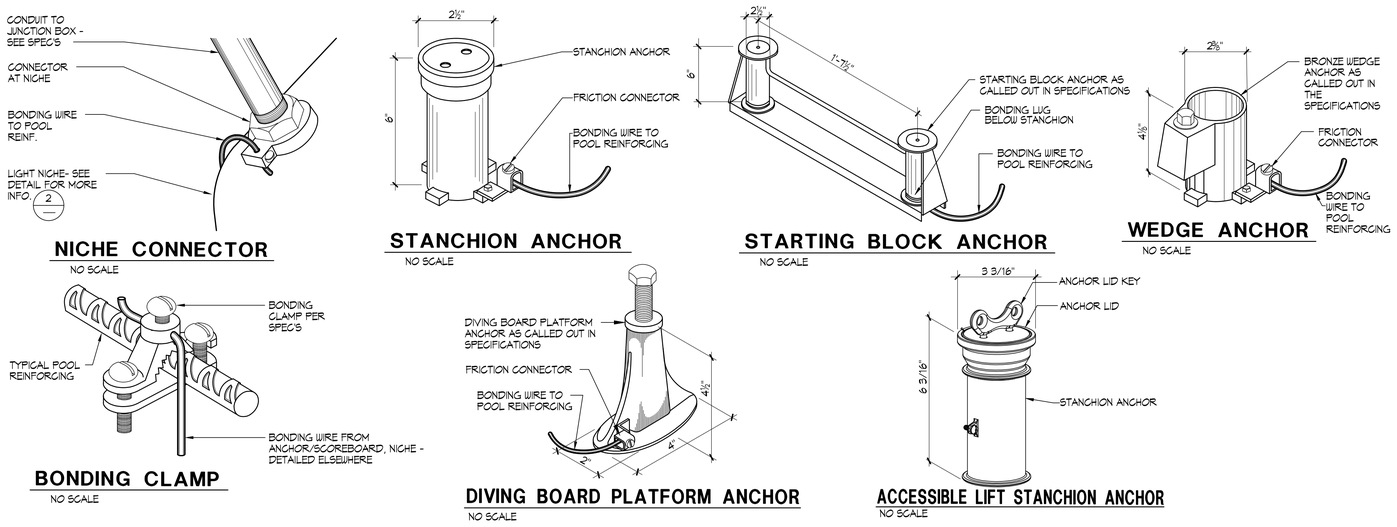

6 BONDING DETAILS NO SCALE

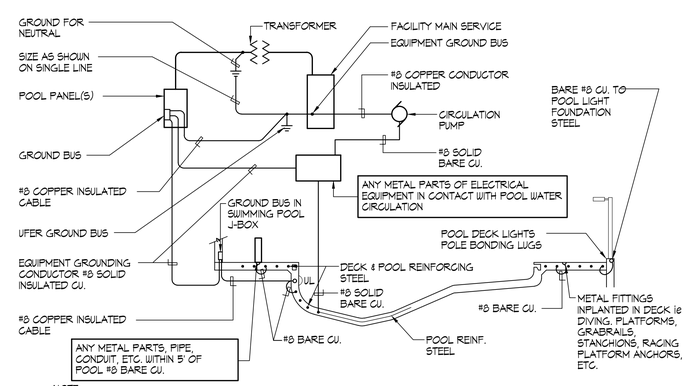

NOTE:

1. STRUCTURAL STEEL IN POOL DECK AND POOL SHALL BE BONDED TOGETHER (TIGHTLY MADE STEEL TIE-WIRES ARE APPROVED FOR BONDING STRUCTURAL ELEMENTS).
2. BONDING CONNECTOR TO COMMON GRID. (POOL STEEL MAY BE USED FOR THAT PURPOSE) SHALL BE MADE BY PRESSURE CONNECTORS OR CLAMPS OF BRASS, COPPER, OR COPPER ALLOY.
3. ALL GROUND BUSES SHALL BE SIZED FOR CONNECTION TO AWG SIZE 8 WIRE PROVIDING ONE SPARE TERMINAL.
4. GROUND AND BOND IN ACCORDANCE WITH ARTICLE 680 OF THE CALIFORNIA ELECTRICAL CODE. ie. LADDERS, FENCING, POLE LIGHTS, DIVING & STARTING STANCHIONS, DISABLED LIFT ETC.
5. PROVIDE BONDING OF AUTOMATIC POOL COVER MOTORS REGARDLESS OF PROXIMITY TO POOL.

7 TYPICAL POOL BONDING AND GROUND DETAIL NO SCALE

els architecture+ urban design
2040 Addison St, Berkeley, CA 94704
510.549.2929 | elsarch.com

PROJECT:

PIEDMONT COMMUNITY POOL

777 MAGNOLIA AVENUE PIEDMONT, CA 94611

PROJECT NUMBER:
202115

CLIENT:
CITY OF PIEDMONT
120 VISTA AVENUE PIEDMONT, CA 94611

PROJECT TEAM:

ARCHITECT:
ELS ARCHITECTURE AND URBAN DESIGN
2040 Addison Street
Berkeley, CA 94704
P: 510.549.2929

CIVIL ENGINEER:
BKF ENGINEERS
4670 Willow Road, Suite 250
Pleasanton, CA 94588
P: 925.396.7700

LANDSCAPE ARCHITECT:
SWA
2200 Bridgeway
Sausalito, CA 94965
P: 415.332.5100

STRUCTURAL ENGINEER:
FORELL/ELSESSER
160 Pine Street, Suite 600
San Francisco, CA 94111
P: 415.837.0700

MEP / FIRE / TELECOM / SECURITY:
GUTTMANN & BLAEVOET
2351 Powell Street
San Francisco, CA 94133
P: 415.655.4000

AQUATICS:
AQUATIC DESIGN GROUP
2226 Faraday Avenue
Carlsbad, CA 92008
P: 760.438.8400

SPECIFICATIONS:
TOPFLIGHT SPECS
49 Geary Street, Suite 230
San Francisco, CA 94108-5748
P: 415.546.6033

REVISION

NUMBER	DATE	DESCRIPTION

ISSUE:
100% DESIGN DEVELOPMENT

DATE:
APRIL 30, 2022

STAMP:

NOT FOR CONSTRUCTION

SHEET TITLE:
DETAILS

SHEET NUMBER:
SP-10

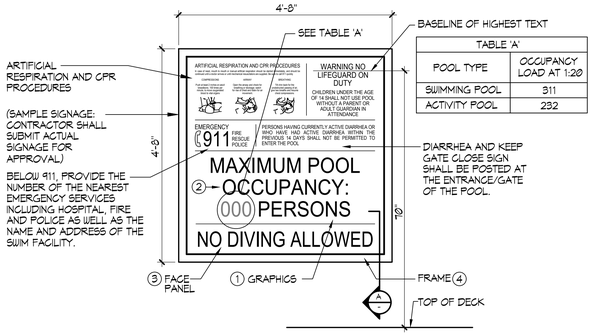

TABLE 'A'	
POOL TYPE	OCCUPANCY LOAD AT 1:20
SWIMMING POOL	311
ACTIVITY POOL	232

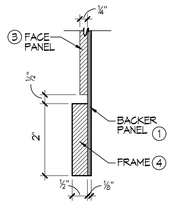

A SECTION
6" = 1'-0"

NOTES:
1. COORDINATE SIGNAGE PLACEMENT AND COLOR SCHEME WITH ARCHITECT/OWNER PRIOR TO INSTALLATION.
2. CONTRACTOR TO PROVIDE SHOP DRAWINGS OF PROPOSED SIGNAGE FOR REVIEW.
3. CHARACTER FONT STYLE SHALL BE CONVENTIONAL AND NOT UNUSUAL AND SHALL BE EASY TO READ.

SIGNAGE NOTES AND SPECIFICATIONS:

① ⅛" THICK PAINTED ALUMINUM BACKER PANEL.

② SILKSCREENED COPY/GRAPHICS WITH NON GLARE FINISH.

③ ¼" THICK PAINTED ALUMINUM FACE PANEL WITH SILKSCREENED COPY/GRAPHICS. ATTACH TO ⅛" THICK PAINTED ALUMINUM BACKER PANEL USING 'VHB' TAPE AND SILICONE ADHESIVE.

④ 2" WIDE x ½" THICK PAINTED ALUMINUM SIGN FRAME ADHERED TO ⅛" THICK PAINTED ALUMINUM BACKER USING 'LORD'S ADHESIVE AS REQUIRED. VERTICAL SECTIONS OF FRAME TO BE RECTANGULAR TUBE. FILL AND SAND SEAM ALONG EDGE AND FACE PRIOR TO PAINTING.

REQUIRED SIGNAGE:

1. ALL SIGNS SHALL HAVE CLEARLY LEGIBLE LETTERS OR NUMBERS NOT LESS THAN 4 INCHES HIGH, UNLESS OTHERWISE NOTED; AFFIXED TO A WALL, POLE, GATE, OR SIMILAR PERMANENT STRUCTURE IN A LOCATION VISIBLE TO ALL POOL USERS.

   A. POOL USER CAPACITY SIGN; A SIGN SHALL INDICATE THE MAXIMUM NUMBER OF POOL USERS PERMITTED FOR EACH POOL. SEE TABLE 'A'.

   B. NO DIVING SIGN; SIGNS SHALL BE POSTED IN CONSPICUOUS PLACES AND SHALL STATE 'NO DIVING' AT POOLS WITH A MAXIMUM WATER DEPTH OF 6 FEET OR LESS.

   C. NO LIFEGUARD SIGN; WHERE NO LIFEGUARD SERVICE IS PROVIDED, A WARNING SIGN SHALL BE POSTED STATING, "NO LIFEGUARD ON DUTY." THE SIGN ALSO SHALL STATE IN LETTERS AT LEAST 1 INCH HIGH, "CHILDREN SHOULD NOT USE POOL WITHOUT ADULT SUPERVISION."

   D. ARTIFICIAL RESPIRATION AND CPR SIGN; AN ILLUSTRATED DIAGRAM WITH TEXT AT LEAST ¼ INCH HIGH OF ARTIFICIAL RESPIRATION AND CPR PROCEDURES SHALL BE POSTED.

   E. EMERGENCY SIGN; THE EMERGENCY TELEPHONE NUMBER 911. WITH NUMBERS NOT LESS THAN 4". THE NUMBER OF THE NEAREST EMERGENCY SERVICES AND THE NAME AND STREET ADDRESS OF THE POOL FACILITY SHALL BE POSTED.

   F. NO USE AFTER DARK; WHERE POOLS WERE CONSTRUCTED FOR WHICH LIGHTING WAS NOT REQUIRED A SIGN SHALL BE POSTED AT EACH POOL ENTRANCE ON THE OUTSIDE OF THE GATE(S) STATING, "NO USE OF POOL ALLOWED AFTER DARK."

   G. KEEP CLOSED; A SIGN SHALL BE POSTED ON THE EXTERIOR SIDE OF GATES AND DOORS LEADING INTO THE POOL ENCLOSURE AREA STATING, "KEEP GATE CLOSED" OR "KEEP DOOR CLOSED".

   H. DIARRHEA; A SIGN IN LETTERS AT LEAST 1 INCH HIGH AND IN A LANGUAGE OR DIAGRAM THAT IS CLEARLY STATED SHALL BE POSTED AT THE ENTRANCE AREA OF A PUBLIC POOL WHICH STATES THAT PERSONS HAVING CURRENTLY ACTIVE DIARRHEA OR WHO HAVE HAD ACTIVE DIARRHEA WITHIN THE PREVIOUS 14 DAYS SHALL NOT BE ALLOWED TO ENTER THE POOL WATER.

2. DIRECTION OF FLOW SIGNAGE AND LABELS.

   A. THE DIRECTION OF FLOW FOR THE RECIRCULATION EQUIPMENT SHALL BE LABELED CLEARLY WITH DIRECTIONAL SYMBOLS SUCH AS ARROWS ON ALL PIPING IN THE EQUIPMENT AREA.

   B. WHERE THE RECIRCULATION EQUIPMENT FOR MORE THAN ONE POOL IS LOCATED ON SITE, THE EQUIPMENT SHALL BE MARKED AS TO WHICH POOL THE SYSTEM SERVES.

   C. VALVES AND PLUMBING LINES SHALL BE LABELED CLEARLY WITH THE SOURCE OR DESTINATION DESCRIPTIONS.

1 POOL SIGNAGE DETAIL ¾"=1'-0"

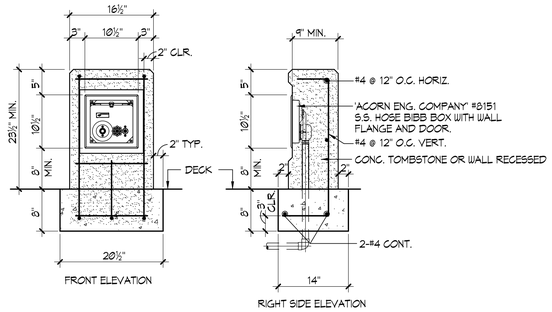

NOTE:
PROVIDE ¾" CHAMFER ON ALL CONCRETE CORNERS. SACK & PATCH ALL EXPOSED SURFACES.

2 HOSE BIBB 1"=1'-0"

els architecture+ urban design
2040 Addison St, Berkeley, CA 94704
510.549.2929 | elsarch.com

PROJECT:

PIEDMONT COMMUNITY POOL

777 MAGNOLIA AVENUE PIEDMONT, CA 94611

PROJECT NUMBER:
202115

CLIENT:
CITY OF PIEDMONT
120 VISTA AVENUE
PIEDMONT, CA 94611

PROJECT TEAM:

ARCHITECT:
ELS ARCHITECTURE AND URBAN DESIGN
2040 Addison Street
Berkeley, CA 94704
P: 510.549.2929

CIVIL ENGINEER:
BKF ENGINEERS
4670 Willow Road, Suite 250
Pleasanton, CA 94588
P: 925.396.7700

LANDSCAPE ARCHITECT:
SWA
2200 Bridgeway
Sausalito, CA 94965
P: 415.332.5100

STRUCTURAL ENGINEER:
FORELL/ELSESSER
160 Pine Street, Suite 600
San Francisco, CA 94111
P: 415.837.0700

MEP / FIRE / TELECOM / SECURITY:
GUTTMANN & BLAEVOET
2351 Powell Street
San Francisco, CA 94133
P: 415.655.4000

AQUATICS:
AQUATIC DESIGN GROUP
2226 Faraday Avenue
Carlsbad, CA 92008
P: 760.438.8400

SPECIFICATIONS:
TOPFLIGHT SPECS
49 Geary Street, Suite 230
San Francisco, CA 94108-5748
P: 415.546.6033

REVISION

NUMBER	DATE	DESCRIPTION

ISSUE:
100% DESIGN DEVELOPMENT

DATE:
APRIL 30, 2022

STAMP:

NOT FOR CONSTRUCTION

SHEET TITLE:
DETAILS

SHEET NUMBER:
SP-11

EQUIPMENT LIST

1. SWIMMING POOL / ACTIVITY POOL / SLIDE BOOSTER PUMP STRAINER(S): 'MER-MADE' F.O. SERIES FRP REDUCING BASKET STRAINER; ONE (1) 10"x6" STANDARD WITH ACRYLIC LID AND ONE (1) 6"x5" WITH TWO (2) STAINLESS STEEL STRAINERS EA. (150lbs.)
2. SWIMMING POOL CIRCULATION PUMP: 'PACO' #3095-7, 5"x6"x9½" TYPE 'LC' END SUCTION CENTRIFUGAL PUMP; 1,760 RPM, 460V, 3PH; 25HP; RATED AT 1200 GPM @ 60 FT. TDH, 86% EFFICIENT; PREMIUM EFFICIENCY TEFC MOTOR; EPOXY COAT ALL WET SURFACES, 'PACO', 'AURORA' OR APPROVED EQUAL. (600 lbs.) PROVIDE 'SPC3' SMART PUMP CONTROL SYSTEM VARIABLE SPEED DRIVE MODEL SPC3025EF4 SYSTEM 20"x40"x9" DEEP. COORDINATE MOUNTING LOCATION TO MAINTAIN DESIRED CLEARANCES, 480V 3PH.
3. ACTIVITY POOL CIRCULATION PUMP: 'PACO' #3095-7, 3"x4"x9½" TYPE 'LC' END SUCTION CENTRIFUGAL PUMP; 1,775 RPM, 460V, 3PH; 7.5HP; RATED AT 315 GPM @ 60 FT. TDH; 77.0% EFFICIENT; PREMIUM EFFICIENCY TEFC MOTOR, EPOXY COAT ALL WET SURFACES, 'PACO', 'AURORA' OR APPROVED EQUAL. (425 lbs.) PROVIDE 'SPC3' SMART PUMP CONTROL SYSTEM VARIABLE SPEED DRIVE MODEL SPC3020TEF4 SYSTEM 14.8"x35"x13.9" DEEP. COORDINATE MOUNTING LOCATION TO MAINTAIN DESIRED CLEARANCES, 460V 3PH.
4. WET PLAY & SLIDE BOOSTER PUMP(S): 'PENTAIR' INTELLIFLO II± 1 HP AT 230V± RATED AT 30 GPM AT 40' TDH COMPLETE WITH STRAINER, TWO (2) TOTAL. INTERCONNECT PUMP(S) WITH CIRCULATION PUMP SO THEY CAN ONLY OPERATE WHEN CIRCULATION PUMP IS ON. WET PLAY TO BE CONTROLLED VIA TIME CLOCK.
5. SWIMMING POOL FILTERS: 'EKO³ SYSTEMS GEN 2' #EKO-4221Ø-1ØØ6-T-4 AUTOMATIC FILTER CONTROL (AFC) FULLY AUTOMATIC HI-RATE PERMANENT MEDIA FILTER WITH 84 SQ. FT. OF FILTER AREA RATED AT 1,260 GPM AT 15 GPM/SQ. FT. COMPLETE WITH 10" FACE PIPING, 6" BACKWASH, SEISMIC ANCHORAGE. PROVIDE ALL UTILITIES, PIPING, VALVING ETC. (7,400 lbs EACH TANK) 'EKO³ SYSTEMS GEN 2' OR EQUAL. PROVIDE SIGNET P51530-P2 FLOSENSOR WITH DIGITAL READ-OUT AND NSF LISTING. ONE (1) SYSTEM TOTAL.
6. ACTIVITY POOL FILTERS: 'EKO³ SYSTEMS GEN 2' #EKO-4221Ø-Ø6Ø4-T-1 AUTOMATIC FILTER CONTROL (AFC) FULLY AUTOMATIC HI-RATE PERMANENT MEDIA FILTER WITH 21 SQ. FT. OF FILTER AREA RATED AT 315 GPM AT 15 GPM/SQ. FT. COMPLETE WITH 8" FACE PIPING, 6" BACKWASH, SEISMIC ANCHORAGE. PROVIDE ALL UTILITIES, PIPING, VALVING ETC. (1,400 lbs EACH TANK) 'EKO³ SYSTEMS GEN 2' OR EQUAL. PROVIDE SIGNET P51530-P1 FLOSENSOR WITH DIGITAL READ-OUT AND NSF LISTING. ONE (1) SYSTEM TOTAL.
7. REFER TO MECHANICAL PLANS FOR SWIMMING POOL CHILLER HEAT EXCHANGER AND SOLAR SYSTEMS. POOL CONTRACTOR SHALL PROVIDE SWIMMING POOL RETURN PIPING INFLUENT AND EFFLUENT CONNECTIONS, SIZED PER MECHANICAL PLANS, WITHIN 5' OF THE POOL RETURN LINE, AFTER FILTERS AND BEFORE CHEMICAL INJECTION POINTS.
8. REFER TO MECHANICAL PLANS FOR ACTIVITY POOL CHILLER HEAT EXCHANGER AND SOLAR SYSTEMS. POOL CONTRACTOR SHALL PROVIDE SWIMMING POOL RETURN PIPING INFLUENT AND EFFLUENT CONNECTIONS, SIZED PER MECHANICAL PLANS, WITHIN 5' OF THE POOL RETURN LINE, AFTER FILTERS AND BEFORE CHEMICAL INJECTION POINTS.
9. CHLORINE STORAGE/FEED SYSTEM(S): PROVIDE 'CHEM-TAINER' 1,000 GALLON #TC7485DC; ONE (1) TOTAL DUAL STORAGE/CONTAINMENT TANK WITH LID SEISMICALLY RESTRAINED; OPERATING WEIGHT = (8,331 lbs.). COMPLIES WITH FED. REG #40CFR-264-193. FEED PUMP SYSTEM(S) SHALL BE LMI #SD43-88P-K51; 288 GPD @ 150 PSI. COMPLETE TWO (2) TOTAL WITH FRP SHELF BRACKET, HARD PIPE TO INJECTION. CHEMICAL DELIVERY LINES SHALL BE ORIENTED IN A MANNER THAT A LEAK FROM THE PRIMARY FILL LINE WILL DRAIN BACK TO STORAGE TANK. ALL NEW CHEMICAL TANKS AND DELIVERY LINES SHALL BE DOUBLED CONTAINED. ALL CHEMICAL TANKS AND DELIVERY LINES SHALL BE LABELED PROPERLY.
10. ACID STORAGE/FEED SYSTEM: PROVIDE 'CHEM-TAINER' 500 GALLON #TC5971DC; DUAL STORAGE/CONTAINMENT TANK WITH LID SEISMICALLY RESTRAINED; OPERATING WEIGHT =(4,165lbs.). COMPLIES WITH FED. REG #40CFR-264-193. PROVIDE 60 GALLON ACID VAPOR RECOVERY SYSTEM. ONE (1) TOTAL. CHEMICAL DELIVERY LINES SHALL BE ORIENTED IN A MANNER THAT A LEAK FROM THE PRIMARY FILL LINE WILL DRAIN BACK TO STORAGE TANK. ALL NEW CHEMICAL TANKS AND DELIVERY LINES SHALL BE DOUBLE CONTAINED. ALL CHEMICAL TANKS AND DELIVERY LINES SHALL BE LABELED PROPERLY.
11. CARBON DIOXIDE STORAGE FEED SYSTEM: PROVIDE FOUR (4) 'NOVO-600', 600lb. CRYOGENIC LIQUID CO2 STORAGE TANK WITH REMOTE FILL PORT, 594 LIQUID lbs., (5,195 CUBIC FEET OF GASEOUS CO2 AT NTP) ONE (1) TOTAL. PROVIDE EKO PH-MTS CO2 HIGH EFFICIENCY FEED SYSTEM WITH ALKALINITY CONTROL, 0 TO 160 SCFH FEED CAPACITY BOOSTER PUMP, PIPING INJECTOR, FLOWMETER, RELAYS AND ACID FEED ALKALINITY CONTROL. TWO (2) SYSTEM TOTAL (921lbs. EA.) PROVIDE HARD WIRED 'ANALOX' #API KIT CO2 DETECTOR WITH AUDIBLE AND VISUAL ALARMS IN EACH CHEMICAL ROOM, UL 1971 STANDARD LISTED, ONE (1) TOTAL.
12. SWIMMING / ACTIVITY POOL WATER CHEMISTRY CONTROLLER(S): PROVIDE ETHERNET CONNECTION TO 'BECSYS' CS-BECSYS1-BP-E SYSTEM WATER CHEMISTRY CONTROLLER. PROVIDE COMPLETE SYSTEM CONTROL PACKAGE. 'BECSYS SYSTEM 1', 'IMPACT', 'WALLACE & TIERNAN' OR APPROVED EQUAL. TWO (2) TOTAL.
13. ELECTRICAL: PROVIDE ALL ELECTRICAL WIRING, CONDUIT, PANEL(S), STARTER/DISCONNECT INTERCONNECT(S) ETC. AS REQUIRED FOR PROPER EQUIPMENT INSTALLATION PER MANUFACTURERS RECOMMENDATIONS AND SHOP DRAWINGS. COORDINATE ALL WORK WITH OTHER TRADES AS REQUIRED. REFER TO ELEC. PLANS FOR ALL ADDITIONAL INFO.
14. PUMP PIT: 10'-0" x 17'-6" x 5'-0" DEEP. PROVIDE 2"Ø GALV. STANDARD STEEL PIPE GUARDRAIL. PROVIDE FLOOR DRAIN TO WASTE. PROVIDE WATERPROOFING PER SPECIFICATIONS. ACCESS LADDER TO BE 'FIBERGRATE' DYNARAIL FRP OR EQUAL.
15. BACKWASH PIT: 10'-0" x 5'-6" x 5'-0" DEEP WITH 8"Ø P-TRAP OUTLET TO SEWER. PROVIDE WATERPROOFING PER SPECIFICATIONS. COORDINATE WITH STRUCTURAL AND PLUMBING PLANS.
16. SWIMMING / ACTIVITY POOL FILL SYSTEM(S): 3" 'CLA-VAL' FILL SYSTEM TO INCLUDE 3" 'CLA-VAL' SOLENOID CONTROL VALVE #136-01BY, 3" DUCT IRON, EPOXY COATED BODY WITH CAST IRON DISC RETAINER AND DIAPHRAGM WASHER, BRONZE TRIM, FLANGED GLOBE PATTERN, 120V AT 60HZ SOLENOID WIRING SHALL BE WIRED TO WATER CHEMISTRY CONTROLLER. PROVIDE 6" AIR GAP AT FILL POINT. TWO (2) TOTAL.
17. EYEWASH/SHOWER: HAWS MODEL #8309WC BARRIER FREE COMBINATION SHOWER AND EYE/FACE WASH WITH CORROSION RESISTANT PROTECTION. SEE MEP SHEETS FOR SUPPLY PIPING. TWO (2) TOTAL.
18. LIGHTING CONTACTOR PANEL: 'ALLEN BRADLEY' #500L; OR APPROVED EQUAL. PANEL SHALL BE MOUNTED IN A NEMA 12 HINGED COVER - LOCKABLE ENCLOSURE. CONTACTORS TO BE SWITCHED BY MOMENTARY SWITCH EQUAL TO 'HUBBELL' #5557 MOUNTED IN J-BOX IN MECHANICAL EQUIPMENT ROOM. REFER TO ELECTRICAL PLANS FOR LOCATION OF OWNER COORDINATED REMOTE UNDERWATER LIGHT SWITCH.
19. POOL OPERATOR WORKSTATION DESK: 'TOTAL LAB SOLUTIONS' EPOXY COUNTERTOP WITH DROP-IN SINK AND TWO (2) END CABINETS, FURNISH WITH WALL MOUNTED TWO (2) FAUCETS 'BROEN BOSS' OR APPROVED EQUAL. SEE MEP PLANS FOR WATER SUPPLY PIPING.
20. ACTIVITY POOL ULTRA VIOLET TREATMENT SYSTEM: 'EVOQUA' WAFER UV MODEL WF-125-6-N, VALIDATED AT 816 GPM, 6" FLANGED CONNECTION IN-LINE UV WITH ONE (1) LAMP @ 2,500 WATTS, 208V 1PH. (148 lbs.) CONTROL UNIT: WF-215-6, 208V 1PH, 23"x31"x12" DEEP. (110 lbs.) PROVIDE PIPING BYPASS, VALVING, ETS EZ VALVE STRAINER AND INSTALLATION AND PIPING PER MANUFACTURER'S RECOMMENDATIONS. ONE (1) SYSTEM TOTAL.

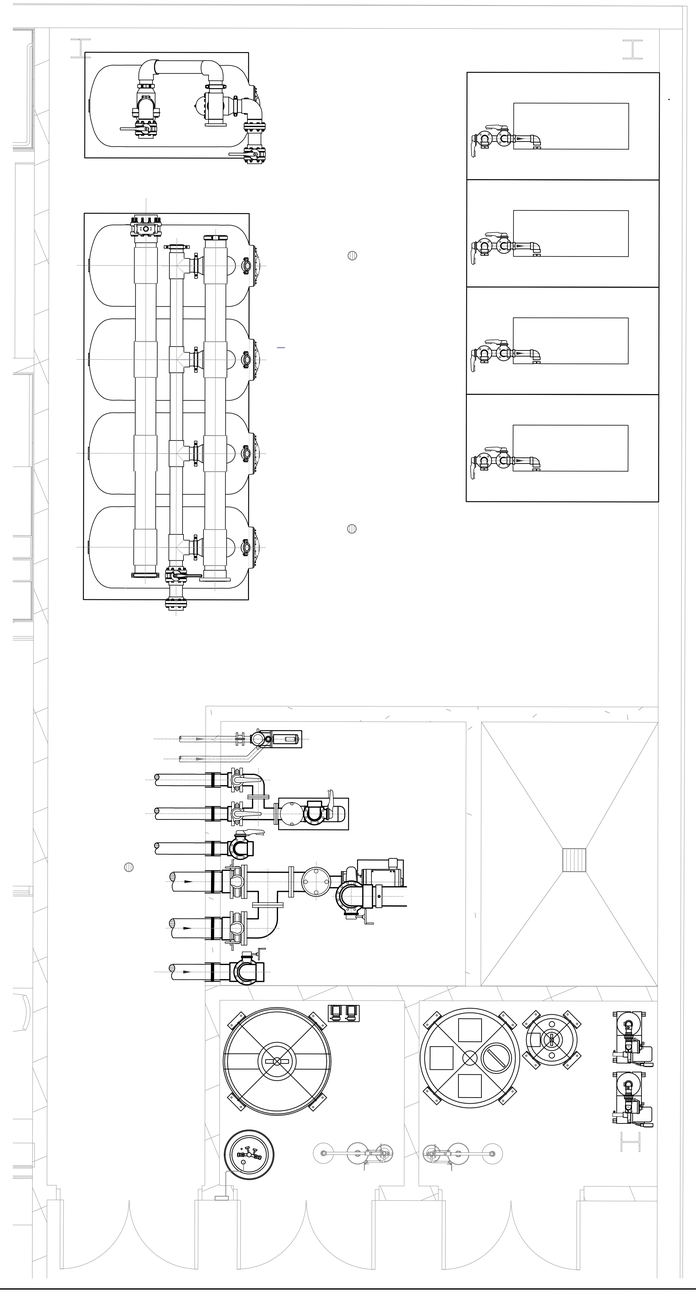

THREE PHASE MOTOR LOADS AT 460V

SWIMMING POOL CIRCULATION PUMP: 25 HP @ 460V	=	34 AMPS
ACTIVITY POOL CIRCULATION PUMP: 7.5 HP @ 460V	=	11 AMPS

GENERAL NOTES

1. THE PIPING SYSTEM SHALL HAVE DIRECTION OF FLOW ARROWS, MATERIAL NAME AT 20 FT. INTERVALS OR AT CHANGE OF DIRECTION.
2. THE POOLS SHALL HAVE A FLOW DIAGRAM OF THE POOL'S PIPING SYSTEM WITH OPERATION INSTRUCTIONS.
3. THE FLOW DIAGRAM AND INSTRUCTIONS SHALL BE AVAILABLE ON THE PREMISES AT ALL TIME
4. ALL MECHANICAL ROOM FLOORS SHALL BE SLOPED A MIN ¼" PER FOOT TO A DRAIN PER CBC 3122B. SEE ARCHITECTURAL SHEETS FOR SPOT ELEVATIONS AND SLOPES.

LEGEND

BV	=	BALL VALVE
BFV	=	BUTTERFLY VALVE
CV	=	CHECK VALVE
FM	=	FLOWMETER
BW	=	BACKWASH
FS	=	FLOOR SINK
AI	=	ACID INJECTION
CI	=	CHLORINE INJECTION
PH	=	PIPE HANGER
PG/VG	=	VACUUM / PRESSURE GAUGE
FD	=	FLOOR DRAIN
HB	=	HOSE BIBB

MEP COMPONENT ANCHORAGE NOTE

ALL MECHANICAL, PLUMBING, AND ELECTRICAL COMPONENTS SHALL BE ANCHORED AND INSTALLED PER THE DETAILS ON THE DSA - APPROVED CONSTRUCTION DOCUMENTS. THE FOLLOWING COMPONENTS SHALL BE ANCHORED OR BRACED TO MEET THE FORCE AND DISPLACEMENT REQUIREMENTS PRESCRIBED IN THE 2019 CBC SECTIONS 1617A.1.18 THROUGH 1617A.1.26 AND ASCE 7-16 CHAPTERS 13, 26 AND 30.

1. ALL PERMANENT EQUIPMENT AND COMPONENTS.
2. TEMPORARY, MOVABLE OR MOBILE EQUIPMENT THAT IS PERMANENTLY ATTACHED (E.G. HARD WIRED) TO THE BUILDING UTILITY SERVICES SUCH AS ELECTRICITY, GAS OR WATER. "PERMANENTLY ATTACHED" SHALL INCLUDE ALL ELECTRICAL CONNECTIONS EXCEPT PLUGS FOR 110/220 VOLT RECEPTACLES HAVING A FLEXIBLE CORD.
3. TEMPORARY, MOVABLE OR MOBILE EQUIPMENT WHICH IS HEAVIER THAN 400 POUNDS OR HAS A CENTER OF MASS LOCATED 4 FEET OR MORE ABOVE THE ADJACENT FLOOR OR ROOF LEVEL THAT DIRECTLY SUPPORT THE COMPONENT IS REQUIRED TO BE RESTRAINED IN A MANNER APPROVED BY DSA.

THE FOLLOWING MECHANICAL AND ELECTRICAL COMPONENTS SHALL BE POSITIVELY ATTACHED TO THE STRUCTURE, BUT NEED NOT DEMONSTRATE DESIGN COMPLIANCE WITH THE REFERENCES NOTED ABOVE. THESE COMPONENTS SHALL HAVE FLEXIBLE CONNECTIONS PROVIDED BETWEEN THE COMPONENT AND ASSOCIATED DUCTWORK, PIPING, AND CONDUIT. FLEXIBLE CONNECTIONS MUST ALLOW MOVEMENT IN BOTH TRANSVERSE AND LONGITUDINAL DIRECTIONS:

A. COMPONENTS WEIGHING LESS THAN 400 POUNDS AND HAVING A CENTER OF MASS LOCATED 4 FEET OR LESS ABOVE THE ADJACENT FLOOR OR ROOF LEVEL THAT DIRECTLY SUPPORT THE COMPONENT.
B. COMPONENTS WEIGHING LESS THAN 20 POUNDS, OR IN THE CASE OF DISTRIBUTED SYSTEMS, LESS THAN 5 POUNDS PER FOOT, WHICH ARE SUSPENDED FROM A ROOF OR FLOOR OR HUNG FROM A WALL.

THE ANCHORAGE OF ALL MECHANICAL, ELECTRICAL AND PLUMBING COMPONENTS SHALL BE SUBJECT TO THE APPROVAL OF DESIGN PROFESSIONAL IN GENERAL RESPONSIBLE CHARGE OR STRUCTURAL ENGINEER DELEGATED RESPONSIBILITY AND ACCEPTANCE BY DSA. THE PROJECT INSPECTOR WILL VERIFY THAT ALL COMPONENTS AND EQUIPMENT HAVE BEEN ANCHORED IN ACCORDANCE WITH ABOVE REQUIREMENTS.

PIPING, DUCTWORK, AND ELECTRICAL DISTRIBUTION SYSTEM BRACING NOTE

PIPING, DUCTWORK, AND ELECTRICAL DISTRIBUTION SYSTEMS SHALL BE BRACED TO COMPLY WITH THE FORCES AND DISPLACEMENTS PRESCRIBED IN ASCE 7-16 SECTION 13.3 AS DEFINED IN ASCE 7-16 SECTION 13.6.5, 13.6.6, 13.6.7, 13.6.8± AND 2019 CBC, SECTIONS 1617A.1.24, 1617A.1.25, 1617A.1.26.

THE METHOD OF SHOWING BRACING AND ATTACHMENTS TO THE STRUCTURE FOR THE IDENTIFIED DISTRIBUTION SYSTEM ARE AS NOTED BELOW. WHEN BRACING AND ATTACHMENTS ARE BASED ON A PREAPPROVED INSTALLATION GUIDE (E.G. OSHPD OPM FOR 2013 CBC OR LATER), COPIES OF THE BRACING SYSTEM INSTALLATION GUIDE OR MANUAL SHALL BE AVAILABLE ON THE JOBSITE PRIOR TO THE START OF AND DURING THE HANGING AND BRACING OF THE DISTRIBUTION SYSTEMS. THE STRUCTURAL ENGINEER OF RECORD SHALL VERIFY THE ADEQUACY OF THE STRUCTURE TO SUPPORT THE HANGER AND BRACE LOADS.

MECHANICAL PIPING (MP), MECHANICAL DUCTS (MD), PLUMBING PIPING (PP), ELECTRICAL DISTRIBUTION SYSTEMS (E):

MP☒ MD☐ PP☒ E☐ OPTION 1: DETAILED ON THE APPROVED DRAWINGS WITH PROJECT SPECIFIC NOTES AND DETAILS.

MECHANICAL ANCHORAGE

1. EXPANSION OR WEDGE ANCHORS INTO CONCRETE: HILTI KB TZ (ICC ESR-1917) OR SIMPSON STRONG BOLT (ICC ESR-1771) TO BE INSTALLED IN ACCORDANCE WITH ICC REPORT AND MANUFACTURER'S RECOMMENDATIONS.
2. EXPANSION OR WEDGE ANCHORS INTO MASONRY: HILTI KB 3 (ICC ESR-1385) OR SIMPSON WEDGE-ALL (ICC ESR-1396) TO BE INSTALLED IN ACCORDANCE WITH ICC REPORT AND MANUFACTURER'S RECOMMENDATIONS.
3. UNDERCUT ANCHORS INTO CONCRETE: HILTI HDA (ICC ESR-1546) TO BE INSTALLED IN ACCORDANCE WITH ICC REPORT AND MANUFACTURER'S RECOMMENDATIONS.
4. HEAVY DUTY SLEEVE ANCHORS INTO CONCRETE: HILTI HSL-3 (ICC ESR-1545) TO BE INSTALLED IN ACCORDANCE WITH ICC REPORT AND MANUFACTURER'S RECOMMENDATIONS.
5. FASTENERS SHALL BE STAINLESS STEEL FOR EXTERIOR USE OR WHEN EXPOSED TO WEATHER. PROVIDE GALVANIZED CARBON STEEL ANCHORS AT OTHER LOCATIONS, UNLESS OTHERWISE NOTED.
6. IF REINFORCEMENT IS ENCOUNTERED DURING DRILLING, ABANDON AND SHIFT THE HOLE LOCATION TO AVOID THE REINFORCEMENT. PROVIDE A MINIMUM OF 2 ANCHOR DIAMETERS OR 1 INCH, WHICHEVER IS LARGER, OF SOUND CONCRETE BETWEEN THE DOWEL AND THE ABANDONED HOLE. FILL THE ABANDONED HOLE WITH NON-SHRINK GROUT. IF THE ANCHOR OR DOWEL MAY NOT BE SHIFTED AS NOTED ABOVE, THE STRUCTURAL ENGINEER WILL DETERMINE A NEW LOCATION.
7. LOCATE REINFORCEMENT AND CONFIRM FINAL ANCHOR LOCATIONS PRIOR TO FABRICATING PLATES, MEMBERS, OR OTHER STEEL ASSEMBLIES ATTACHED WITH MECHANICAL ANCHORS.
8. ANCHORS SHALL BE PROOF-TESTED BY OWNER'S TESTING AND INSPECTION AGENCY.
9. TEST ANCHORS NO SOONER THAN 24 HOURS AFTER INSTALLATION.
10. APPLY TEST LOAD BY ANY METHOD THAT WILL EFFECTIVELY MEASURE THE TENSION OF THE ANCHOR SUCH AS DIRECT PULL WITH A HYDRAULIC JACK, TORQUE WRENCH, OR CALIBRATED SPRING LOADING DEVICES, ETC.
11. REACTION LOADS FROM TEST FIXTURES MAY BE APPLIED CLOSE TO THE ANCHOR BEING TESTED, PROVIDED THE ANCHOR IS NOT RESTRAINED FROM WITHDRAWING BY A BASE PLATE OR OTHER FIXTURE. IF RESTRAINT IS FOUND, LOOSEN AND SHIM OR REMOVE THE FIXTURE PRIOR TO TESTING.
12. UNLESS OTHERWISE NOTED, PROVIDE MINIMUM EMBEDMENT OF ANCHORS AS SHOWN IN TABLES BELOW.
13. TEST 50% OF ANCHORS PER ONE OF THE FOLLOWING METHODS AND IN ACCORDANCE WITH THE VALUES SHOWN IN THE TABLE:
    A. HYDRAULIC RAM METHOD: APPLY PROOF TEST LOAD WITHOUT REMOVING THE NUT. IF IT IS NOT POSSIBLE TO TEST WITH THE NUT INSTALLED, REPLACE THE NUT WITH A THREADED COUPLER TO THE LOAD. ANCHOR IS ACCEPTABLE IF NO MOVEMENT IS OBSERVED AT THE TEST LOAD. MOVEMENT MAY BE DETERMINED WHEN THE WASHER UNDER THE NUT BECOMES LOOSE.
    B. TORQUE WRENCH METHOD: TEST ANCHORS TO THE TORQUE LOAD INDICATED IN THE TABLE WITH ONE-HALF TURN OF THE NUT.
14. IF ANY ANCHOR FAILS TESTING, REPLACE ANCHOR AND TEST ADDITIONAL ANCHORS OF THE SAME CATEGORY NOT PREVIOUSLY TESTED UNTIL TWENTY (20) CONSECUTIVE TESTS PASS, THEN RESUME INITIAL TESTING FREQUENCY.

WEDGE OR EXPANSION ANCHOR EMBEDMENT DEPTH AND TEST LOAD

SIZE	MIN. EMBED	ANCHORS IN CONCRETE		ANCHORS IN MASONRY	
		TENSION LOAD (LBS)	TORQUE LOAD (FT-LBS)	TENSION LOAD (LBS)	TORQUE LOAD (FT-LBS)
¼" DIA.	2"	800	10	300	10
⅜" DIA.	2"	1,500	25	500	30
½" DIA.	3¼"	3,000	40	1,000	35
⅝" DIA.	4"	4,900	60	1,250	55
¾" DIA.	4¾"	6,300	110	1,700	120

1 MECHANICAL ROOM LAYOUT PLAN

⅜"=1'-0"

els architecture+ urban design
2040 Addison St, Berkeley, CA 94704
510.549.2929 | elsarch.com

PROJECT:

PIEDMONT COMMUNITY POOL

777 MAGNOLIA AVENUE PIEDMONT, CA 94611

PROJECT NUMBER: 202115

CLIENT:
CITY OF PIEDMONT
120 VISTA AVENUE
PIEDMONT, CA 94611

PROJECT TEAM:

ARCHITECT:
ELS ARCHITECTURE AND URBAN DESIGN
2040 Addison Street
Berkeley, CA 94704
P: 510.549.2929

CIVIL ENGINEER:
BKF ENGINEERS
4670 Willow Road, Suite 250
Pleasanton, CA 94588
P: 925.396.7700

LANDSCAPE ARCHITECT:
SWA
2200 Bridgeway
Sausalito, CA 94965
P: 415.332.5100

STRUCTURAL ENGINEER:
FORELL/ELSESSER
160 Pine Street, Suite 600
San Francisco, CA 94111
P: 415.837.0700

MEP / FIRE / TELECOM / SECURITY:
GUTTMANN & BLAEVOET
2351 Powell Street
San Francisco, CA 94133
P: 415.655.4000

AQUATICS:
AQUATIC DESIGN GROUP
2226 Faraday Avenue
Carlsbad, CA 92008
P: 760.438.8400

SPECIFICATIONS:
TOPFLIGHT SPECS
49 Geary Street, Suite 230
San Francisco, CA 94108-5748
P: 415.546.6033

REVISION

NUMBER	DATE	DESCRIPTION

ISSUE: **100% DESIGN DEVELOPMENT**

DATE: **APRIL 30, 2022**

STAMP:

NOT FOR CONSTRUCTION

SHEET TITLE: **MECHANICAL ROOM LAYOUT PLAN**

SHEET NUMBER: **MR-1**

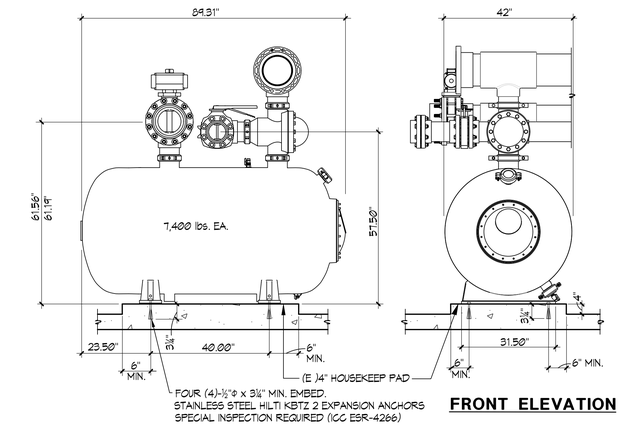

1 FILTER ANCHORAGE

NO SCALE

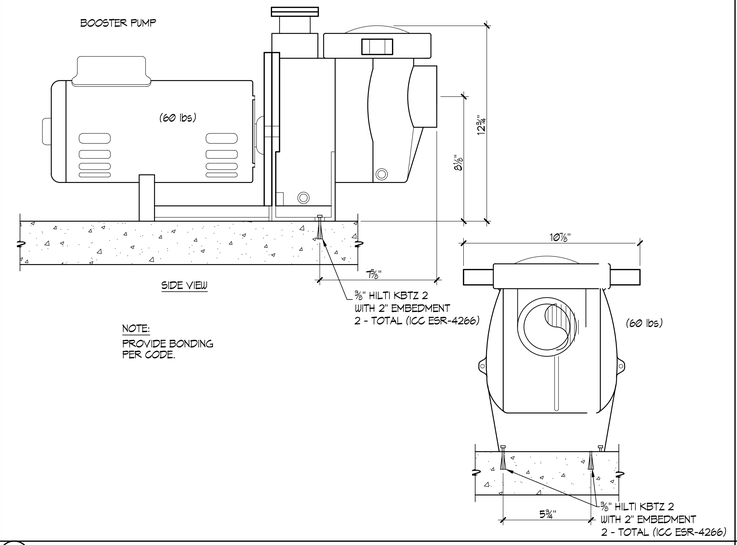

2 PUMP ANCHORAGE

NO SCALE

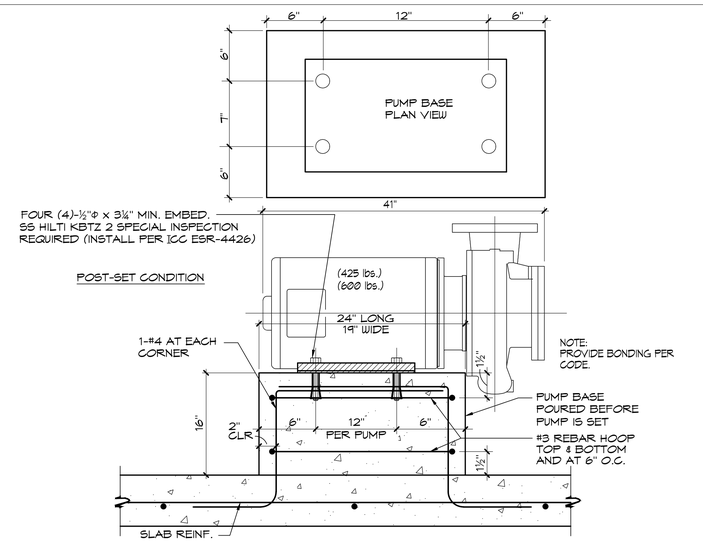

3 PUMP ANCHORAGE

NO SCALE

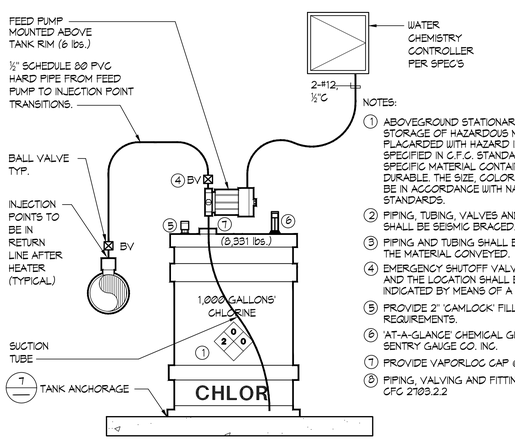

NOTES:

1. ABOVEGROUND STATIONARY TANKS USED FOR THE STORAGE OF HAZARDOUS MATERIALS SHALL BE PLACARDED WITH HAZARD IDENTIFICATION SIGNS AS SPECIFIED IN C.F.C. STANDARD 79-3 FOR THE SPECIFIC MATERIAL CONTAINED. SIGNS SHALL BE DURABLE. THE SIZE, COLOR AND LETTERING SHALL BE IN ACCORDANCE WITH NATIONALLY RECOGNIZED STANDARDS.
2. PIPING, TUBING, VALVES AND RELATED COMPONENTS SHALL BE SEISMIC BRACED.
3. PIPING AND TUBING SHALL BE IDENTIFIED TO INDICATE THE MATERIAL CONVEYED.
4. EMERGENCY SHUTOFF VALVES SHALL BE IDENTIFIED AND THE LOCATION SHALL BE CLEARLY VISIBLE AND INDICATED BY MEANS OF A SIGN.
5. PROVIDE 2" 'CAMLOCK' FILL PORT PER VENDOR'S REQUIREMENTS.
6. 'AT-A-GLANCE' CHEMICAL GUAGE BY KRUEGER SENTRY GAUGE CO. INC.
7. PROVIDE VAPORLOC CAP @ TUBING ENTRANCE
8. PIPING, VALVING AND FITTINGS SHALL COMPLY WITH CFC 2103.2.2

4 SODIUM HYPOCHLORITE FEED SCHEMATIC

NO SCALE

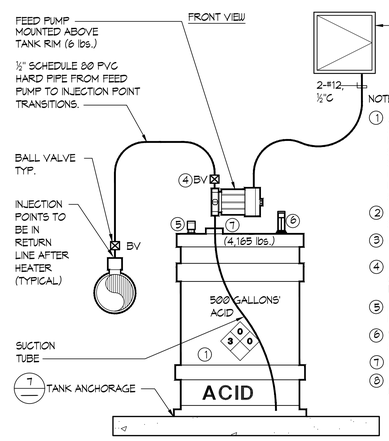

NOTES:

1. ABOVEGROUND STATIONARY TANKS USED FOR THE STORAGE OF HAZARDOUS MATERIALS SHALL BE PLACARDED WITH HAZARD IDENTIFICATION SIGNS AS SPECIFIED IN C.F.C. STANDARD 79-3 FOR THE SPECIFIC MATERIAL CONTAINED. SIGNS SHALL BE DURABLE. THE SIZE, COLOR AND LETTERING SHALL BE IN ACCORDANCE WITH NATIONALLY RECOGNIZED STANDARDS.
2. PIPING, TUBING, VALVES AND RELATED COMPONENTS SHALL BE SEISMIC BRACED.
3. PIPING AND TUBING SHALL BE IDENTIFIED TO INDICATE THE MATERIAL CONVEYED.
4. EMERGENCY SHUTOFF VALVES SHALL BE IDENTIFIED AND THE LOCATION SHALL BE CLEARLY VISIBLE AND INDICATED BY MEANS OF A SIGN.
5. PROVIDE 2" 'CAMLOCK' FILL PORT PER VENDOR'S REQUIREMENTS.
6. 'AT-A-GLANCE' CHEMICAL GUAGE BY KRUEGER SENTRY GAUGE CO. INC.
7. PROVIDE VAPORLOC CAP @ TUBING ENTRANCE
8. PIPING, VALVING AND FITTINGS SHALL COMPLY WITH CFC 2103.2.2

5 MURIATIC ACID FEED SCHEMATIC

NO SCALE

NOTES:

1. SEAL NON-VENTED MANWAY AND PERMANENTLY CLOSE.
2. PROVIDE CAMLOCK FITTING FOR FILL HOSE.
3. PROVIDE 2" BULKHEAD FITTING.
4. PROVIDE 2" BALL CHECK VALVE.
5. PROVIDE DOUBLE WALLED DUAL CONTAINMENT TANK.
6. PROVIDE ¾"x100' HOSE W/ NON-CORROSIVE ENDS.
7. PROVIDE 2" BULKHEAD FITTING WITH 'VAPORLOC' SYSTEM FOR FEED PUMP SUCTION LINES(5).
8. PROVIDE 'AT-A-GLANCE CHEMICAL GAUGE' BY KRUEGER SENTRY GAUGE CO. INC.

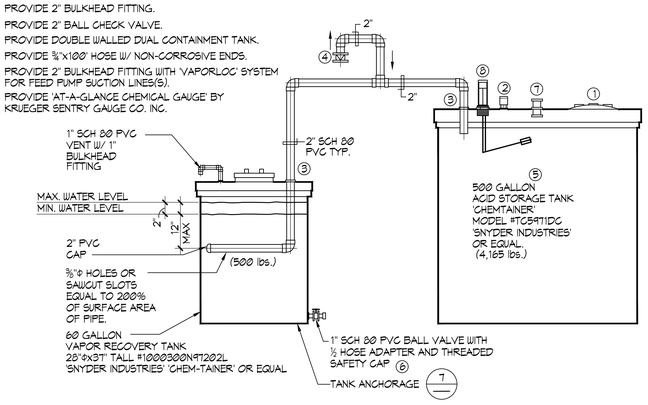

6 VAPOR RECOVERY TANK

1/16"=1'-0"

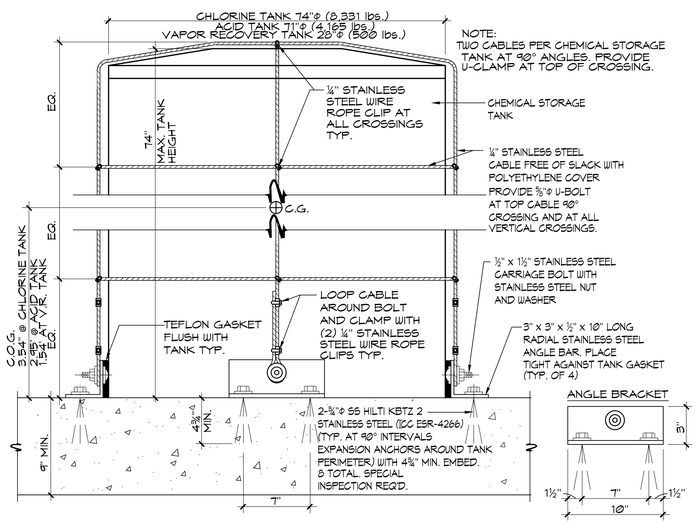

7 CHEMICAL TANK ANCHOR (TYP. 3 TANKS)

NO SCALE

CHEMICAL CLASSIFICATION TABLE

COMMON NAME	CHEMICAL NAME	% COMP.	CAS #	FORM	QUANT. STORED (NOT USED)	QUANT. IN USE (USE-CLOSED)	MAXIMUM ALLOWABLE QUANTITY	LOCATION (STORAGE & USE)	HAZ. CLASSES	JUSTIFICATION
SODIUM HYPOCHLORITE	SODIUM HYPOCHLORITE	12.5%	7681-52-9	LIQUID	0 GAL.	1,000 GAL.	1,000 GAL.	CHEM. ROOM	CORROSIVE LIQUID	MSDS
MURIATIC ACID	HYDROCHLORIC ACID	25%	7647-01-0	LIQUID	0 GAL.	500 GAL.	500 GAL.	CHEM. ROOM	CORROSIVE LIQUID	MSDS
CARBON DIOXIDE	CARBON DIOXIDE	100%	124-39-9	LIQUID	0 lbs.	600 lbs.	686 lbs.	CHEM. ROOM	CRYOGENIC	MSDS

QUANTITIES OF CHEMICALS DO NOT EXCEED THE QUANTITIES LISTED IN CBC TABLES 307.1 (1) AND 307.1 (2).
FOR CARBON DIOXIDE GAS SEE TABLE 1.12.8(b) OF THE NFPA. 6,000 FT³ ALLOWABLE OR 686 lbs. STORAGE PER CONTAINED AREA
PROVIDE HARD WIRED CO_2 DETECTOR 'ANALOX SENSOR TECHNOLOGY' MODEL #AP1 KIT SENSOR AND STROBE UNITS 120V HARD WIRED W/ STROBE LIGHT AND AUDIBLE ALARM. SENSOR MOUNTED 18 INCHES A.F.F. AND ALARM LEVEL BETWEEN 10-16 INCHES AND WITHIN VISIBLE EYESIGHT OF DOOR. TO BE SET TO DETECT CO2 GAS IN LEVELS IN EXCESS OF THE PEL. PROVIDE IN EACH ROOM CONTAINING CO_2.

RATING EXPLANATION GUIDE

RATING	HEALTH HAZARD	FLAMMABILITY HAZARD	REACTIVITY HAZARD	SPECIFIC HAZARD	
4	CAN BE LETHAL	EXTREMELY FLAMMABLE. IGNITES AT BELOW 73° F.	MAY EXPLODE AT NORMAL TEMPERATURES AND PRESSURES	OXIDIZER:	OX
				ACID:	ACID
3	CAN CAUSE SERIOUS OR PERMANENT INJURY	IGNITES AT ABOVE 73° F, BELOW 100° F.	MAY EXPLODE AT HIGH TEMPERATURES OR SHOCK	CORROSIVE:	COR
2	CAN CAUSE TEMPORARY INCAPACITATION OR RESIDUAL INJURY	IGNITES AT ABOVE 100° F, BELOW 200° F.	VIOLENT CHEMICAL CHANGE AT HIGH TEMPERATURES OR PRESSURES	ALKALI:	ALK
				USE NO WATER:	W
1	CAN CAUSE SIGNIFICANT IRRITATION	IGNITES AT ABOVE 200° F.	NORMALLY STABLE. HIGH TEMPERATURES MAKE UNSTABLE	RADIATION HAZARDS:	☢
				POLYMERIZES:	P
0	NO HAZARD	WILL NOT BURN	STABLE		

NOTES:

1. CONFIRM SIGNAGE WITH LOCAL FIRE MARSHALL AND/OR BUILDING CODES PRIOR TO INSTALLATION. SIGNS SHALL CONFORM TO NFPA 704.
2. SIGNS SHALL BE SIZES AND COLORS PER CODE MOUNTED AT +60" A.F.F. ON DOORS AT CHEMICAL ROOMS.

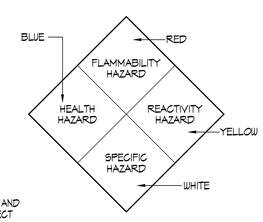

LEGEND

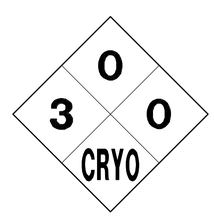

CARBON DIOXIDE

SODIUM HYPOCHLORITE

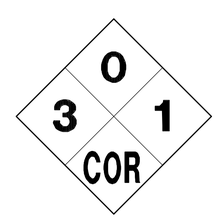

MURIATIC ACID

SIGN SHALL BE POSTED AT ROOM ENTRANCE.
SIGN SHALL BE NOT LESS THAN 8" IN LENGTH AND 6" IN HEIGHT AND INDICATE:

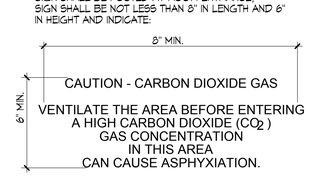

8 HAZARDOUS INFORMATION SIGNAGE

NO SCALE

els architecture+ urban design
2040 Addison St, Berkeley, CA 94704
510.549.2929 | elsarch.com

PROJECT:

PIEDMONT COMMUNITY POOL

777 MAGNOLIA AVENUE PIEDMONT, CA 94611

PROJECT NUMBER:
202115

CLIENT:
CITY OF PIEDMONT
120 VISTA AVENUE
PIEDMONT, CA 94611

PROJECT TEAM:

ARCHITECT:
ELS ARCHITECTURE AND URBAN DESIGN
2040 Addison Street
Berkeley, CA 94704
P: 510.549.2929

CIVIL ENGINEER:
BKF ENGINEERS
4670 Willow Road, Suite 250
Pleasanton, CA 94588
P: 925.396.7700

LANDSCAPE ARCHITECT:
SWA
2200 Bridgeway
Sausalito, CA 94965
P: 415.332.5100

STRUCTURAL ENGINEER:
FORELL/ELSESSER
160 Pine Street, Suite 600
San Francisco, CA 94111
P: 415.837.0700

MEP / FIRE / TELECOM / SECURITY:
GUTTMANN & BLAEVOET
2351 Powell Street
San Francisco, CA 94133
P: 415.655.4000

AQUATICS:
AQUATIC DESIGN GROUP
2226 Faraday Avenue
Carlsbad, CA 92008
P: 760.438.8400

SPECIFICATIONS:
TOPFLIGHT SPECS
49 Geary Street, Suite 230
San Francisco, CA 94108-5748
P: 415.546.6033

REVISION

NUMBER	DATE	DESCRIPTION

ISSUE:
100% DESIGN DEVELOPMENT

DATE:
APRIL 30, 2022

STAMP:

NOT FOR CONSTRUCTION

SHEET TITLE:
DETAILS

SHEET NUMBER:
MR-3

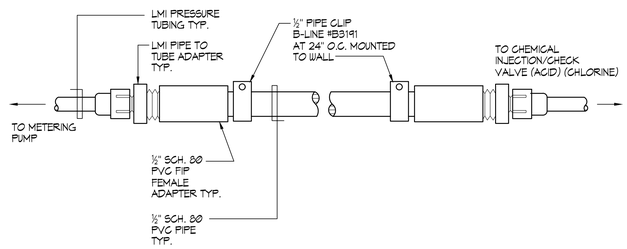

1 CHEMICAL FEED PIPING DETAIL NO SCALE

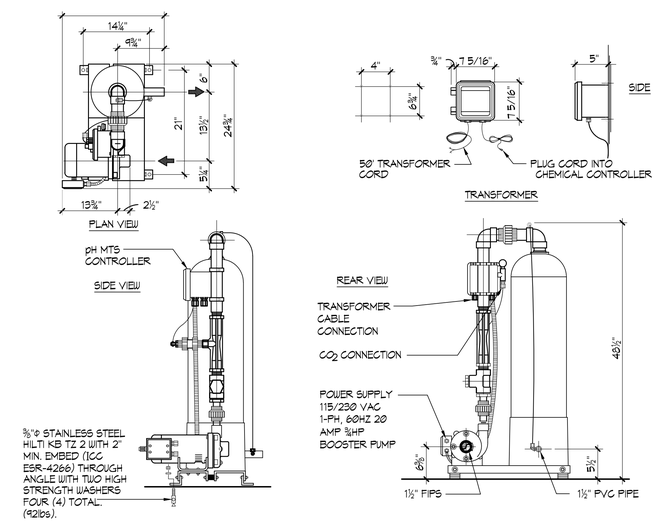

2 CARBON DIOXIDE pH MTS CONTROLLER NO SCALE

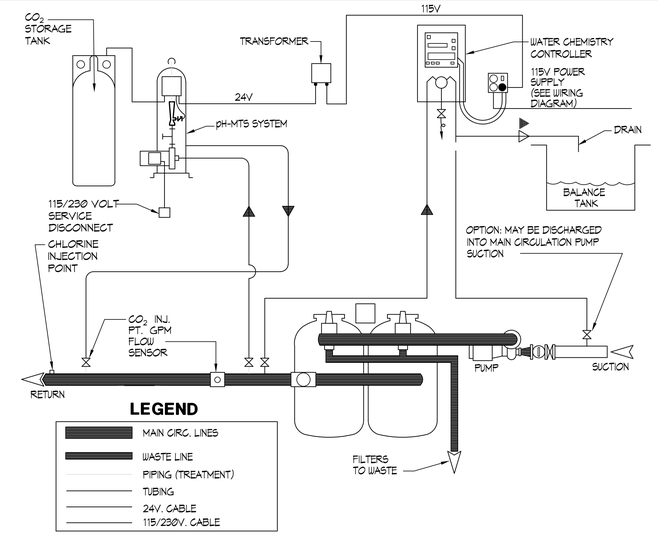

3 TYPICAL CARBON DIOXIDE pH-MTS INSTALLATION NO SCALE

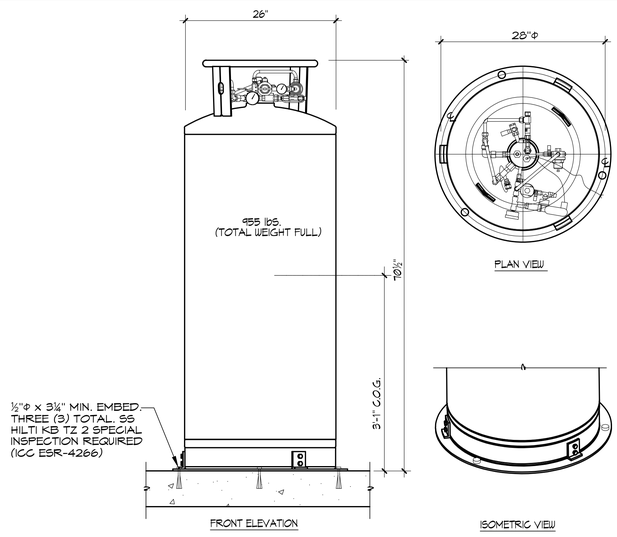

4 CO2 TANK ANCHORAGE DETAIL NO SCALE

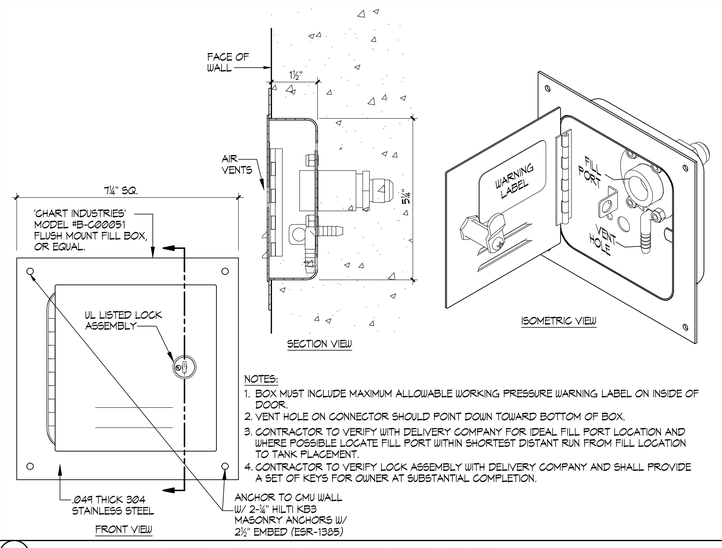

NOTES:
1. BOX MUST INCLUDE MAXIMUM ALLOWABLE WORKING PRESSURE WARNING LABEL ON INSIDE OF DOOR.
2. VENT HOLE ON CONNECTOR SHOULD POINT DOWN TOWARD BOTTOM OF BOX.
3. CONTRACTOR TO VERIFY WITH DELIVERY COMPANY FOR IDEAL FILL PORT LOCATION AND WHERE POSSIBLE LOCATE FILL PORT WITHIN SHORTEST DISTANT RUN FROM FILL LOCATION TO TANK PLACEMENT.
4. CONTRACTOR TO VERIFY LOCK ASSEMBLY WITH DELIVERY COMPANY AND SHALL PROVIDE A SET OF KEYS FOR OWNER AT SUBSTANTIAL COMPLETION.

5 C02 FLUSH MOUNT FILL BOX ½"=1"

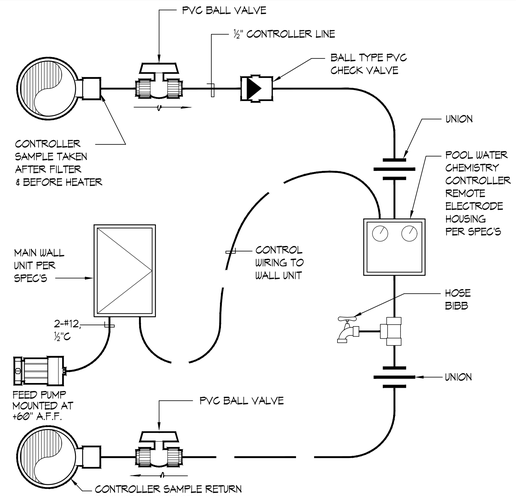

6 WATER CHEMISTRY CONTROLLER SCHEMATIC NO SCALE

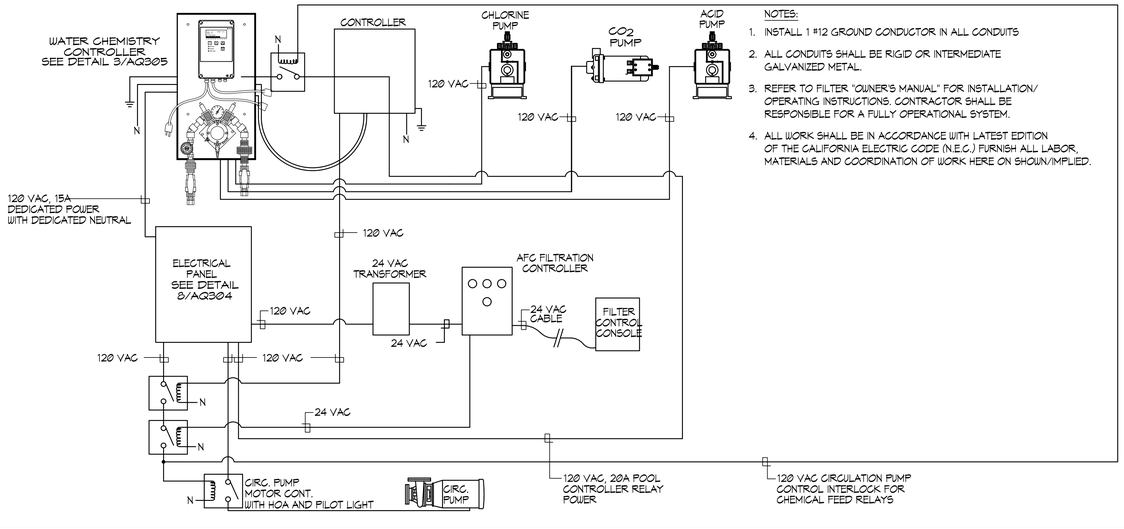

NOTES:
1. INSTALL 1 #12 GROUND CONDUCTOR IN ALL CONDUITS
2. ALL CONDUITS SHALL BE RIGID OR INTERMEDIATE GALVANIZED METAL.
3. REFER TO FILTER "OWNER'S MANUAL" FOR INSTALLATION/ OPERATING INSTRUCTIONS. CONTRACTOR SHALL BE RESPONSIBLE FOR A FULLY OPERATIONAL SYSTEM.
4. ALL WORK SHALL BE IN ACCORDANCE WITH LATEST EDITION OF THE CALIFORNIA ELECTRIC CODE (N.E.C.) FURNISH ALL LABOR, MATERIALS AND COORDINATION OF WORK HERE ON SHOWN/IMPLIED.

7 POOL MECHANICAL ELECTRICAL INTERCONNECTION DIAGRAM NO SCALE

8 PANEL SCHEDULE

els architecture+ urban design
2040 Addison St, Berkeley, CA 94704
510.549.2929 | elsarch.com

PROJECT:

PIEDMONT COMMUNITY POOL

777 MAGNOLIA AVENUE PIEDMONT, CA 94611

PROJECT NUMBER:
202115

CLIENT:
CITY OF PIEDMONT
120 VISTA AVENUE
PIEDMONT, CA 94611

PROJECT TEAM:

ARCHITECT:
ELS ARCHITECTURE AND URBAN DESIGN
2040 Addison Street
Berkeley, CA 94704
P: 510.549.2929

CIVIL ENGINEER:
BKF ENGINEERS
4670 Willow Road, Suite 250
Pleasanton, CA 94588
P: 925.396.7700

LANDSCAPE ARCHITECT:
SWA
2200 Bridgeway
Sausalito, CA 94965
P: 415.332.5100

STRUCTURAL ENGINEER:
FORELL/ELSESSER
160 Pine Street, Suite 600
San Francisco, CA 94111
P: 415.837.0700

MEP / FIRE / TELECOM / SECURITY:
GUTTMANN & BLAEVOET
2351 Powell Street
San Francisco, CA 94133
P: 415.655.4000

AQUATICS:
AQUATIC DESIGN GROUP
2226 Faraday Avenue
Carlsbad, CA 92008
P: 760.438.8400

SPECIFICATIONS:
TOPFLIGHT SPECS
49 Geary Street, Suite 230
San Francisco, CA 94108-5748
P: 415.546.6033

REVISION

NUMBER	DATE	DESCRIPTION

ISSUE:
100% DESIGN DEVELOPMENT

DATE:
APRIL 30, 2022

STAMP:

NOT FOR CONSTRUCTION

SHEET TITLE:
DETAILS

SHEET NUMBER:
MR-4

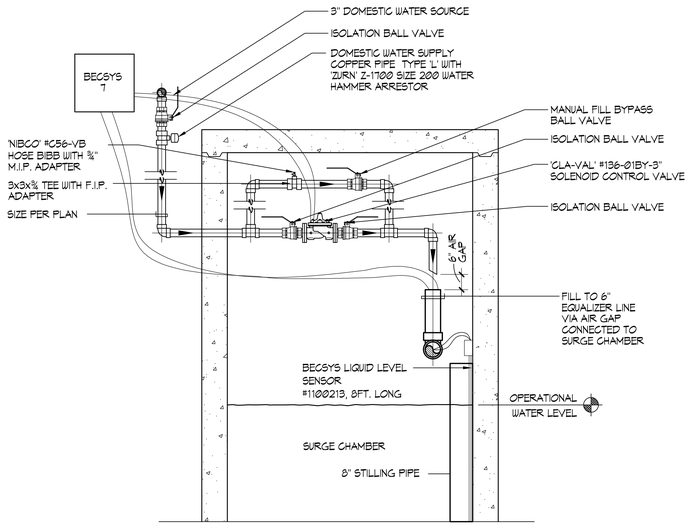

1 AUTOMATIC/MANUAL WATER MAKE-UP SCHEMATIC NO SCALE

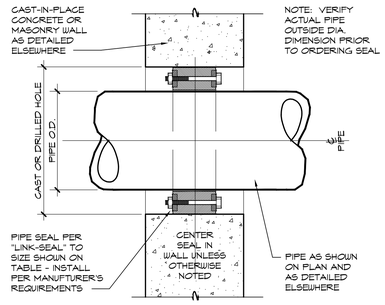

PIPE SIZE (NOMINAL)	CAST/DRILLED HOLE SIZE (PIPE O.D.)	24" SCHEDULE CONCRETE-SOLID NOTE (1,2)	LINK SEAL SIZE NO.	NO. OF LINKS PER SEAL
½"	0.840	2.0	L5-200	4
¾"	1.050	2.5	L5-275	5
1"	1.315	3.0	L5-300	4
1¼"	1.660	3.0	L5-275	7
1½"	1.900	3.5	L5-300	5
2"	2.375	4.0	L5-300	6
2½"	2.875	4.0	L5-200	9
3"	3.50	5.0	L5-300	8
3½"	4.00	6.0	L5-325	5
4"	4.50	6.0	L5-300	10
5"	5.563	8.0	L5-425	6
6"	6.625	10.0	L5-475	10
8"	8.625	12.0	L5-475	12
10"	10.75	14.0	L5-400	10
12"	12.75	16.0	L5-400	12
14"	14.00	16.0	L5-325	15
16"	16.00	18.0	L5-325	17
18"	18.00	23.0	L5-500	16
20"	20.00	25.0	L5-500	18
22"	22.00	27.0	L5-500	19
24"	24.00	29.0	L5-500	21
28"	28.00	31.0	L5-500	23
28"	28.00	33.0	L5-500	24
30"	30.00	35.0	L5-500	26
32"	32.00	37.0	L5-500	28
34"	34.00	39.0	L5-500	29
36"	36.00	41.0	L5-500	30

2 PIPE SEAL TO WALL / FLOOR NO SCALE

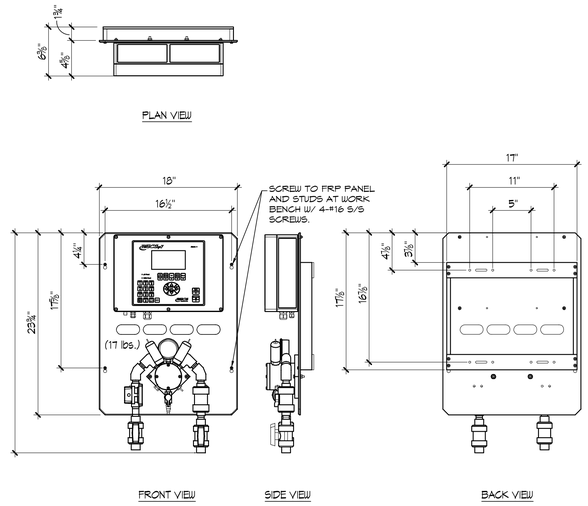

3 BECSYS 7 WATER CHEMISTRY CONTROLLER 1½"=1'-0"

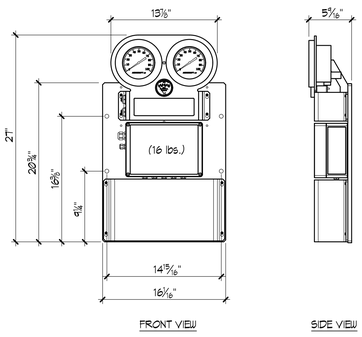

4 BECSYS FILTER INTERFACE SYSTEM 1½"=1'-0"

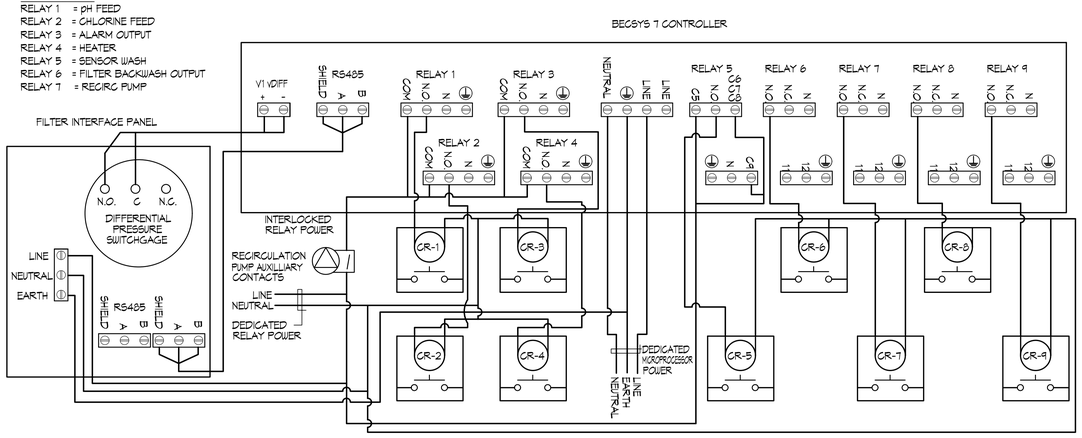

5 BECSYS 7 CONTROLLER NO SCALE

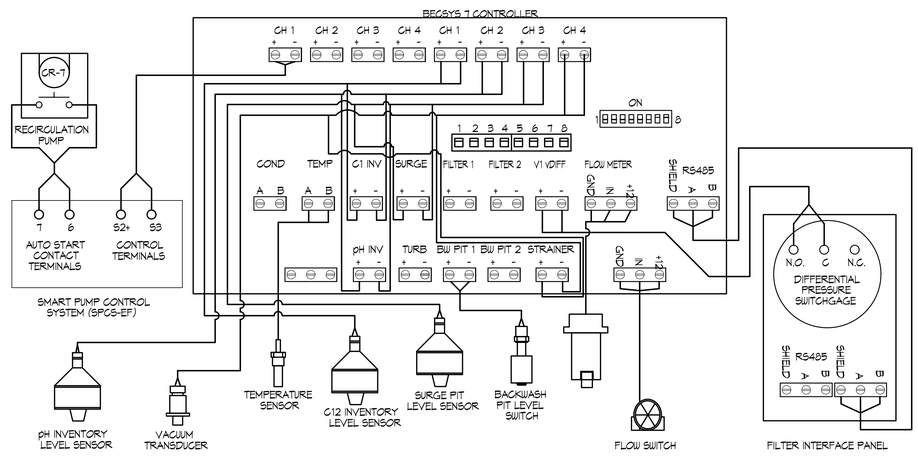

6 BECSYS 7 CONTROLLER NO SCALE

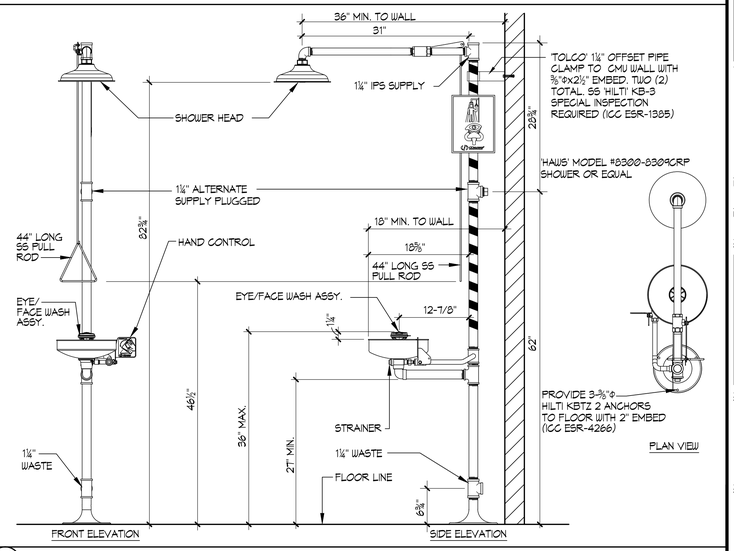

7 TYPICAL EYEWASH/SHOWER DETAIL NO SCALE

els architecture+ urban design
2040 Addison St, Berkeley, CA 94704
510.549.2929 | elsarch.com

PROJECT:

PIEDMONT COMMUNITY POOL

777 MAGNOLIA AVENUE PIEDMONT, CA 94611

PROJECT NUMBER:
202115

CLIENT:
CITY OF PIEDMONT
120 VISTA AVENUE
PIEDMONT, CA 94611

PROJECT TEAM:

ARCHITECT:
ELS ARCHITECTURE AND URBAN DESIGN
2040 Addison Street
Berkeley, CA 94704
P: 510.549.2929

CIVIL ENGINEER:
BKF ENGINEERS
4670 Willow Road, Suite 250
Pleasanton, CA 94588
P: 925.396.7700

LANDSCAPE ARCHITECT:
SWA
2200 Bridgeway
Sausalito, CA 94965
P: 415.332.5100

STRUCTURAL ENGINEER:
FORELL/ELSESSER
160 Pine Street, Suite 600
San Francisco, CA 94111
P: 415.837.0700

MEP / FIRE / TELECOM / SECURITY:
GUTTMANN & BLAEVOET
2351 Powell Street
San Francisco, CA 94133
P: 415.655.4000

AQUATICS:
AQUATIC DESIGN GROUP
2226 Faraday Avenue
Carlsbad, CA 92008
P: 760.438.8400

SPECIFICATIONS:
TOPFLIGHT SPECS
49 Geary Street, Suite 230
San Francisco, CA 94108-5748
P: 415.546.6033

REVISION

NUMBER	DATE	DESCRIPTION

ISSUE:
100% DESIGN DEVELOPMENT

DATE:
APRIL 30, 2022

STAMP:
NOT FOR CONSTRUCTION

SHEET TITLE:
DETAILS

SHEET NUMBER:
MR-5

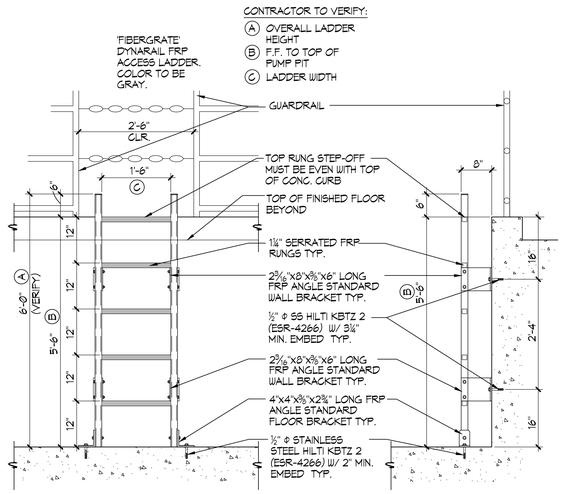

1 FRONT ELEVATION

2 SIDE ELEVATION

1 PUMP PIT ACCESS LADDER

¾"=1'-0"

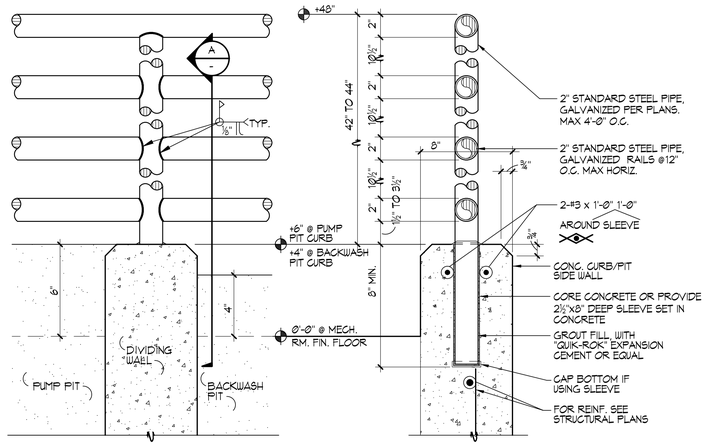

ELEVATION AT PIT DIVIDING WALL

A GUARD RAIL SECTION

2 PIT GUARD RAIL

3"=1'-0"

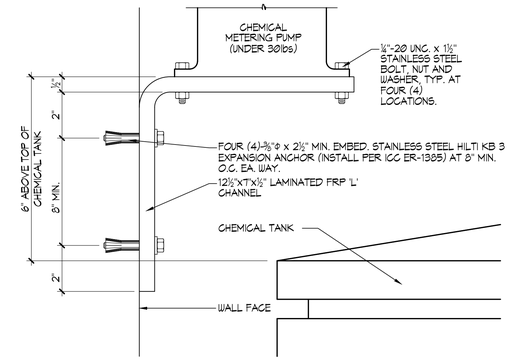

3 CHEMICAL PUMP SHELF

6"=1'-0"

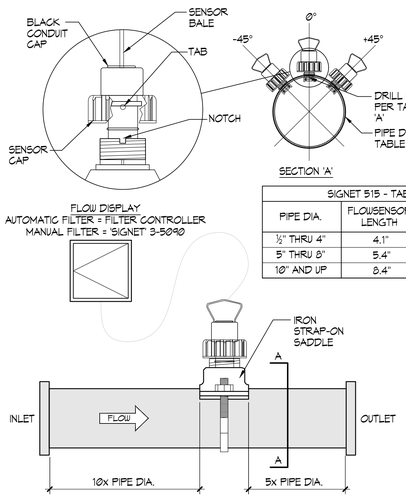

NOTES:

1. HORIZONTAL PIPE RUNS: MOUNT SENSOR IN -45°, 0°, OR +45° POSITION PER MANUFACTURER'S RECOMMENDATIONS.
2. VERTICAL PIPE RUNS: MOUNT SENSOR IN ANY ORIENTATION PER MANUFACTURER'S RECOMMENDATIONS.
3. FLOW SENSOR LOCATION PER PLAN

SIGNET 515 - TABLE 'A'		
PIPE DIA.	FLOWSENSOR LENGTH	DRILL HOLE
½" THRU 4"	4.1"	1⅞"
5" THRU 8"	5.4"	2¼"
10" AND UP	8.4"	2¼"

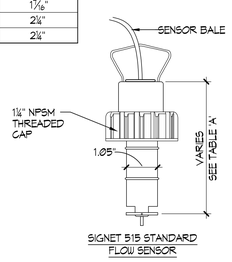

SIGNET 515 STANDARD FLOW SENSOR

4 SIGNET FLOWMETER

NO SCALE

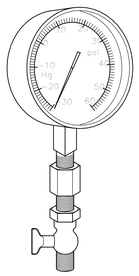

4½" S/S CASED LIQUID FILLED PRESSURE GAUGES SHALL HAVE A DIAL RANGE PRESSURE OF 60psi AND VACUUM RANGE OF 30" Hg THE MINOR GRADUATIONS SHALL HAVE A PRESSURE OF 2psi AND VACUUM OF 2" Hg, ¼" NPT PER SPECIFICATIONS.

SNUBBER

'PETCOCK' MODEL #A10, BRASS

NOTES:

1. PRESSURE GAUGES SHALL BE INSTALLED BY MEANS OF DRILLING AND TAPPING PIPE TO BE MONITORED. THE GAUGE SHALL THEN BE THREADED INTO THE PIPE. PROVIDE WITH SNUBBER AND PET COCK.
2. GAUGE MAY BE USED WHEREVER CRUCIAL VACUUM OR PRESSURE READINGS ARE ESSENTIAL.

5 PRESSURE/VACUUM GAUGE

6"=1'-0"

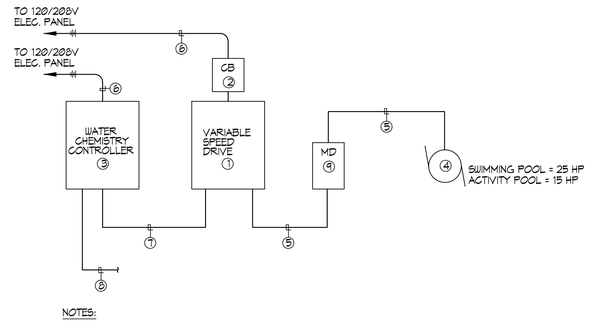

NOTES:

1. VARIABLE SPEED DRIVE MOTOR CONTROL CABINET, SEE PLANS AND SPECIFICATIONS.
2. ENCLOSED CIRCUIT BREAKER, SEE SINGLE LINE DIAGRAM.
3. WATER CHEMISTRY/FILTER CONTROL UNIT, SEE PLANS.
4. CONNECT TO CIRCULATION PUMP MOTOR, SEE PLANS.
5. MOTOR FEEDERS, SEESINGLE LINE DIAGRAM.
6. 120 VOLT BRANCH CIRCUITS, SEE PLANS.
7. ¾"C, (4) #12, (1) #12 GND. (120 VOLT CONTROL WIRING)
8. 24 VOLT SIGNAL AND SENSOR CABLING, SEE SPECIFICATIONS AND INSTALLATION INSTRUCTIONS FOR ADDITIONAL REQUIREMENTS.
9. MOTOR DISCONNECT, SEE PLANS.

6 TYPICAL WIRING SCHEMATIC AT SPCS UNIT

NO SCALE

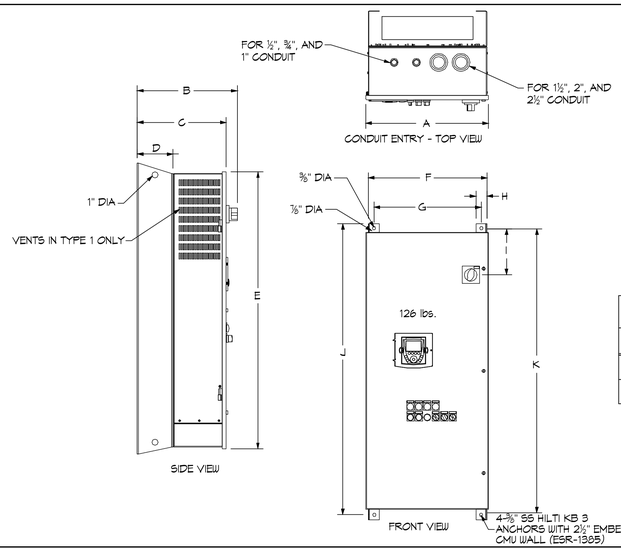

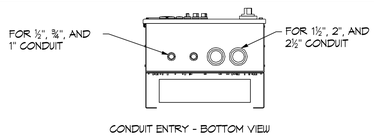

CONDUIT ENTRY - BOTTOM VIEW

NOTE:
PROVIDE AT LEAST 3" OF MOUNTING CLEARANCE ON EACH SIDE OF THE DRIVE CONTROLLER.
PROVIDE AT LEAST 6" OF MOUNTING CLEARANCE ON EACH TOP AND BOTTOM OF THE DRIVE CONTROLLER

'SPCS' EKO-FLEX SIZING TABLE													
HP	HP	WEIGHT	DIMENSIONS										
460V	208/230V	LBS	A	B	C	D	E	F	G	H	I	J	K
10 TO 25	7.5 TO 10	126	20.00"	13.93"	12.08"	3.01"	38.38"	19.49"	17.54"	1.86"	7.65"	41.00"	39.75"

7 'SPCS' EKO-FLEX ENCLOSURE DIMENSIONS

NO SCALE

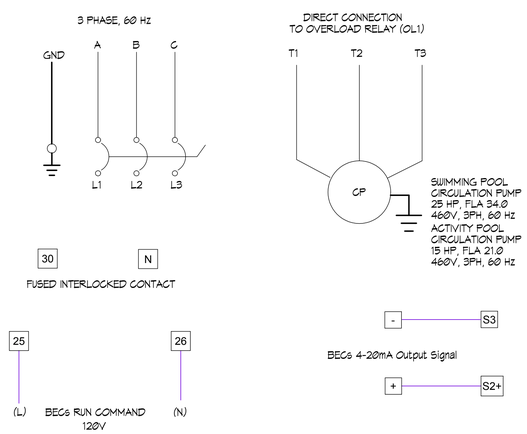

8 'SPCS' EKO-FLEX FIELD CONNECTION DIAGRAM

NO SCALE

els architecture+ urban design
2040 Addison St, Berkeley, CA 94704
510.549.2929 | elsarch.com

PROJECT:

PIEDMONT COMMUNITY POOL

777 MAGNOLIA AVENUE PIEDMONT, CA 94611

PROJECT NUMBER:
202115

CLIENT:
CITY OF PIEDMONT
120 VISTA AVENUE
PIEDMONT, CA 94611

PROJECT TEAM:

ARCHITECT:
ELS ARCHITECTURE AND URBAN DESIGN
2040 Addison Street
Berkeley, CA 94704
P: 510.549.2929

CIVIL ENGINEER:
BKF ENGINEERS
4670 Willow Road, Suite 250
Pleasanton, CA 94588
P: 925.396.7700

LANDSCAPE ARCHITECT:
SWA
2200 Bridgeway
Sausalito, CA 94965
P: 415.332.5100

STRUCTURAL ENGINEER:
FORELL/ELSESSER
160 Pine Street, Suite 600
San Francisco, CA 94111
P: 415.837.0700

MEP / FIRE / TELECOM / SECURITY:
GUTTMANN & BLAEVOET
2351 Powell Street
San Francisco, CA 94133
P: 415.655.4000

AQUATICS:
AQUATIC DESIGN GROUP
2226 Faraday Avenue
Carlsbad, CA 92008
P: 760.438.8400

SPECIFICATIONS:
TOPFLIGHT SPECS
49 Geary Street, Suite 230
San Francisco, CA 94108-5748
P: 415.546.6033

REVISION

NUMBER	DATE	DESCRIPTION

ISSUE:
100% DESIGN DEVELOPMENT

DATE:
APRIL 30, 2022

STAMP:

NOT FOR CONSTRUCTION

SHEET TITLE:
DETAILS

SHEET NUMBER:
MR-6

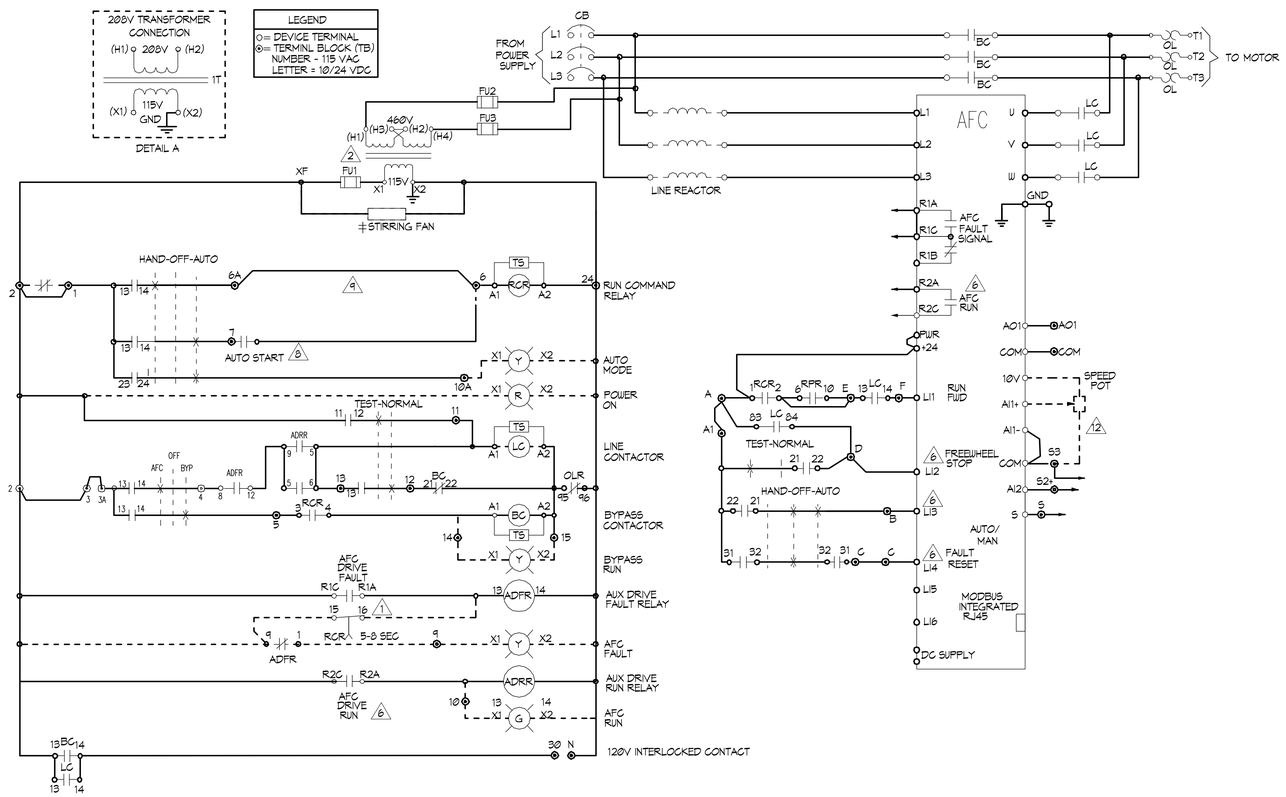

EKO-FLEX ATV61 FACTORY CONFIGURATION					
MENU	No	SUB-MENU	DESCRIPTION	CODE	ADJ.
SIM	1.1	----	2/3 WIRE CONTROL	tCC	2C
SIM	1.1	----	PUMPS FANS	CFG	PnF
SIM	1.1	----	STANDARD MOT. FREQ (HZ)	bFr	60
SIM	1.1	----	ACCELERATION (SEC)	ACC	10
SIM	1.1	----	DECELERATION (SEC)	dEC	10
SIM	1.1	----	LOW SPEED (HZ)	LSP	3
SIM	1.3	----	SWITCHING FREQ. (HZ)	SCr	8
I - O	1.5	----	2 WIRE TYPE	tCt	LEL
I - O	1.5	AI2 CONFIG.	AI2 MIN. VALUE (mA)	CrI2	4
I - O	1.5	R2 CONFIG.	R2 ASSIGN - DRIVE RUNNING	r2C	rUn
CtL	1.6	----	REF. 1 CHAN	FR1	HMI
CtL	1.6	----		FR1	AI1
CtL	1.6	----	PROFILE	CHCF	SEP
FUn	1.7	STOP CONFIG.	FREEWHEEL STOP ASSIGN	nST	LI2
FUn	1.7	REFERENCE SWITCH	REF. 1B SWITCHING	rCb	LI3
FUn	1.7	REFERENCE SWITCH	REF. 1B CHAN	Fr1b	AI2
FLt	1.8	FAULT RESET	FAULT RESET	rSF	LI4
FLt	1.8	CATCH ON THE FLY	CATCH ON THE FLY	FLR	YES
FLt	1.8	OUTPUT PHASE LOSS	OUTPHASE LOSS	PDL	NO
COM	1.9	FORCED LOCAL	FORCED LOCAL ASSIGN.	FLt	LI4

DESCRIPTION	TYPE 1	TYPE 12K	TYPE 3R
STIRRING FANS	10-100 HP 460V, 1.5-50HP 208/230V	10-100 HP 460V, 1.5-50HP 208/230V	NA
VENTILIATION FAN	NA	NA	ALL HP
SPACE HEATER	NA	NA	ALL HP

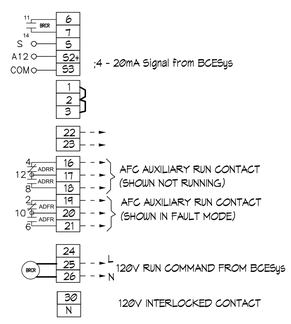

NOTES:

1. RCR TIMED CONTACT USED ONLY IF LINE CONTACTOR IS SUPPLIED
2. CONTROL TRANSFORMER SHOWN FOR 460V PRIMARY. FOR 230V PRIMARY, JUMPER H2-H3 IS
6. PROGRAMMED I/O SEE CONTROLLER FUNCTION CONFIGURATION TABLE.
8. BECs RUN COMMAND RELAY (BRCR)
9. JUMPER USED WHEN START-STOP PUSH BUTTONS NOT USED.

1 'SPCS' EKO-FLEX VARIABLE FREQUENCY DRIVE SYSTEM SCHEMATIC

NO SCALE

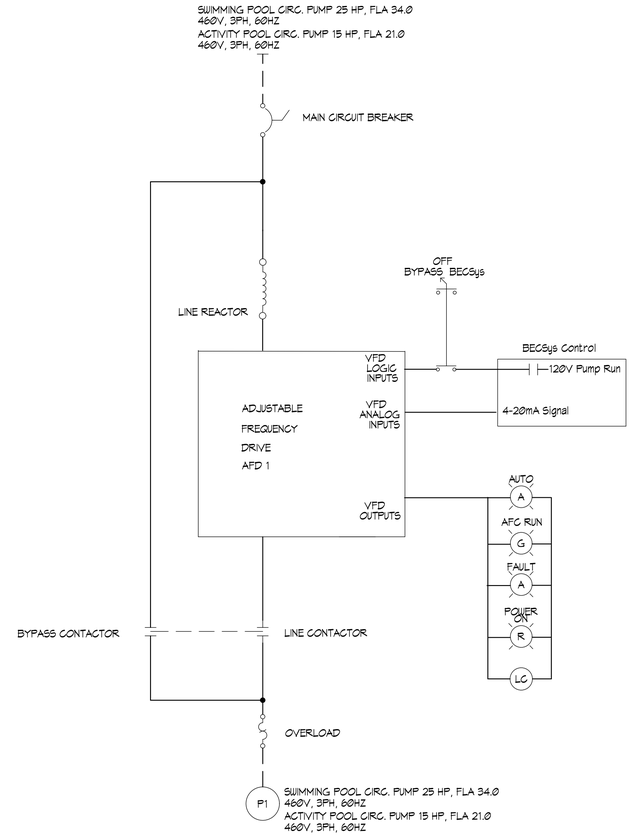

2 'SPCS' EKO-FLEX SINGLE LINE DIAGRAM

NO SCALE

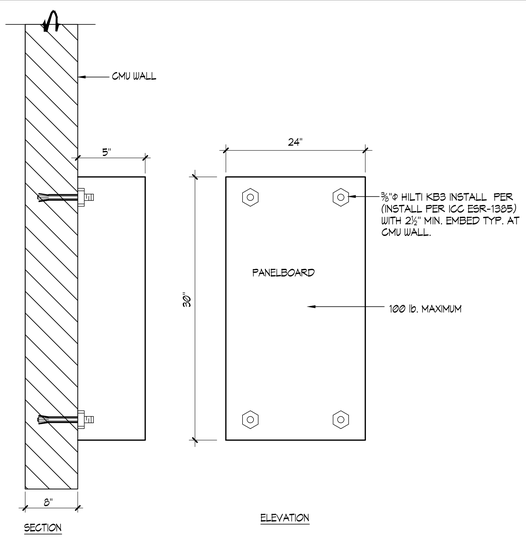

3 PANELBOARD MOUNTING DETAIL

NO SCALE

els architecture+ urban design
2040 Addison St, Berkeley, CA 94704
510.549.2929 | elsarch.com

PROJECT:

PIEDMONT COMMUNITY POOL

777 MAGNOLIA AVENUE PIEDMONT, CA 94611

PROJECT NUMBER: 202115

CLIENT:

CITY OF PIEDMONT
120 VISTA AVENUE
PIEDMONT, CA 94611

PROJECT TEAM:

ARCHITECT:
ELS ARCHITECTURE AND URBAN DESIGN
2040 Addison Street
Berkeley, CA 94704
P: 510.549.2929

CIVIL ENGINEER:
BKF ENGINEERS
4670 Willow Road, Suite 250
Pleasanton, CA 94588
P: 925.396.7700

LANDSCAPE ARCHITECT:
SWA
2200 Bridgeway
Sausalito, CA 94965
P: 415.332.5100

STRUCTURAL ENGINEER:
FORELL/ELSESSER
160 Pine Street, Suite 600
San Francisco, CA 94111
P: 415.837.0700

MEP / FIRE / TELECOM / SECURITY:
GUTTMANN & BLAEVOET
2351 Powell Street
San Francisco, CA 94133
P: 415.655.4000

AQUATICS:
AQUATIC DESIGN GROUP
2226 Faraday Avenue
Carlsbad, CA 92008
P: 760.438.8400

SPECIFICATIONS:
TOPFLIGHT SPECS
49 Geary Street, Suite 230
San Francisco, CA 94108-5748
P: 415.546.6033

REVISION

NUMBER	DATE	DESCRIPTION

ISSUE: 100% DESIGN DEVELOPMENT

DATE: APRIL 30, 2022

STAMP:

NOT FOR CONSTRUCTION

SHEET TITLE: DETAILS

SHEET NUMBER: MR-7

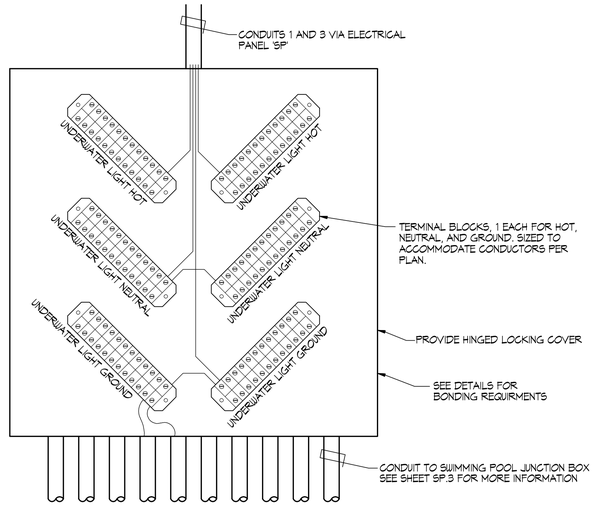

1 UNDERWATER LIGHT CONTACTOR PANEL

NO SCALE

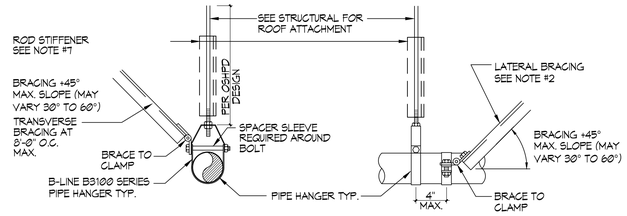

HANGER/BRACE PERPENDICULAR

HANGER ROD SIZES/TABLE

- ⅜"Φ AT 2" PIPING MAX. ROD LENGTH = SEE OPM DESIGN
- ⅜"Φ AT 4" PIPING MAX. ROD LENGTH = SEE OPM DESIGN
- ¾"Φ AT 6" PIPING MAX. ROD LENGTH = SEE OPM DESIGN
- ¾"Φ AT 8" PIPING MAX. ROD LENGTH = SEE OPM DESIGN
- ¾"Φ AT 12" PIPING MAX. ROD LENGTH = SEE OPM DESIGN

MAX. PIPE HANGER SPACING

- 4" PIPING OR SMALLER = 6'-0" O.C.
- 6" PIPING = 6'-0" O.C.
- 8" PIPING = 6'-0" O.C.
- 10" PIPING = 4'-0" O.C.

HANGER/BRACE LONGITUDINAL

NOTES:

1. REFER TO OSHPD (OPM #0043-13 & #0052-13) FOR PIPE HANGER HARDWARE & INSTALLATION. INSTALLATION SHALL SATISFY ANCHORAGE REQUIREMENTS OF ACI 318 CHAPTER 17.
2. PROVIDE BRACING FOR EACH PIPE RUN IN TWO DIRECTIONS, AT EACH CHANGE OF DIRECTION OF PLUMBING AND MID LENGTHS SPAN NO GREATER THAN 12'-0".

   ROOF STRUCTURAL SYSTEMS.
4. REFER TO STRUCTURAL PLANS FOR TYPICAL DIAGONAL BRACE ATTACHMENT.
5. FOR COPPER TUBING USE COPPER PLATED OR PAINTED B3104CT, FELT LINED B3100F, OR PLASTIC COATED B3100C.
6. REFER TO MR.1 FOR PIPE HANGER LOCATIONS.
7. PROVIDE ROD STIFFENER WHEN BRACING IS USED OR WHERE ROD LENGTHS EXCEED 31", SEE OPM DESIGN

2 'UNISTRUT' PIPING HANGER / SUPPORT DETAILS

NO SCALE

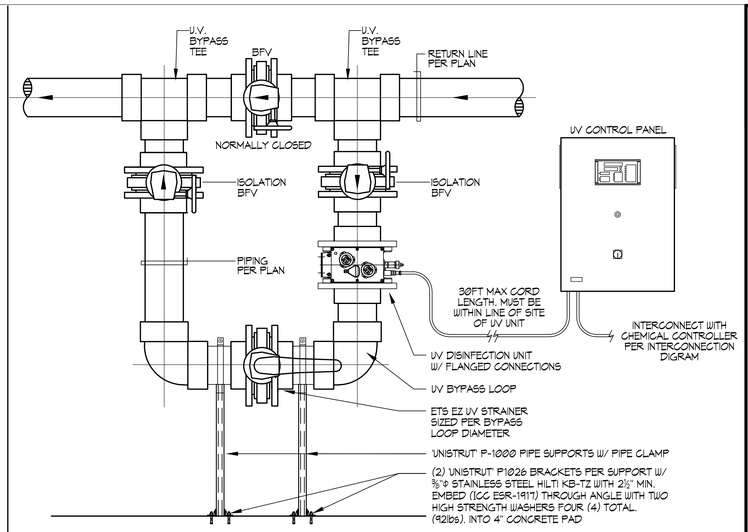

3 ECF U.V. DISINFECTION UNIT INSTALATION DETAIL

NO SCALE

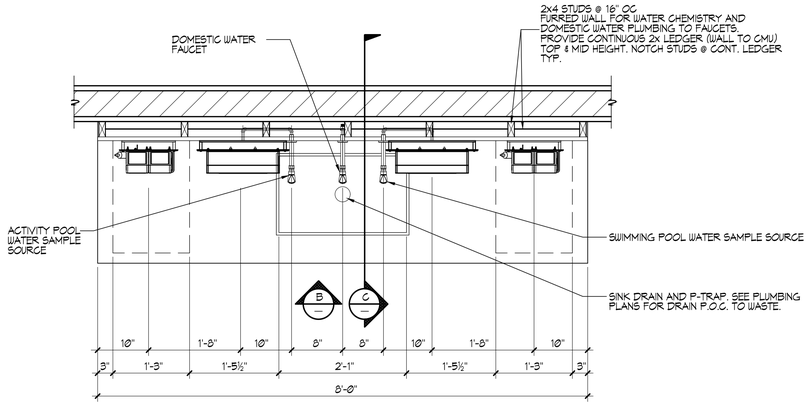

A PLAN VIEW

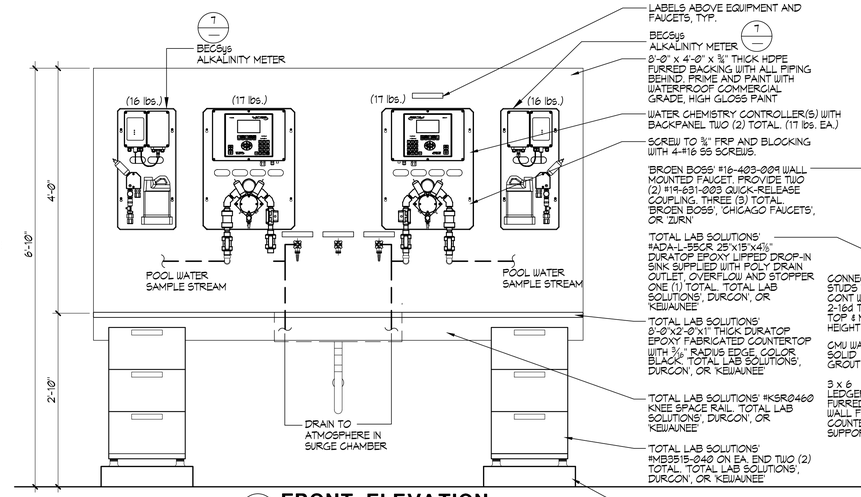

B FRONT ELEVATION

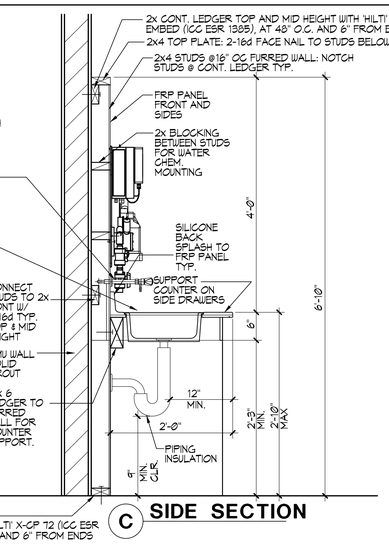

C SIDE SECTION

4 POOL OPERATOR WORKSTATION DESK DETAIL

1"=1'-0"

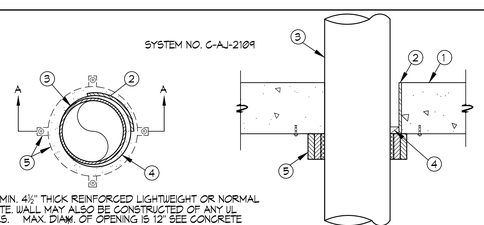

PVC PIPE	NOM. PIPE DIAM. IN	F RATING HR
PVC, CPVC	GREATER THAN 6	2
PVC, CPVC, ABS, FRPP	6 OR SMALLER	3
PVC PIPE	**NOM. PIPE DIAM. IN**	**T RATING HR**
PVC, CPVC, ABS, FRPP	1½, 2, 3,	2
PVC, CPVC, ABS, FRPP	4	3
PVC, CPVC, ABS+, FRPP	6	3
PVC, CPVC	GREATER THAN 6	0
ABS ++	6	0

\+ INDICATES SOLID CORE ABS ONLY

++ INDICATES CELLULAR CORE ABS ONLY

1. FLOOR OR WALL ASSEMBLY - MIN. 4½" THICK REINFORCED LIGHTWEIGHT OR NORMAL WEIGHT (100-150 pcf) CONCRETE. WALL MAY ALSO BE CONSTRUCTED OF ANY UL CLASSIFIED CONCRETE BLOCKS. MAX. DIAM. OF OPENING IS 12" SEE CONCRETE BLOCKS (CAZT) CATEGORY IN THE FIRE RESISTANCE DIRECTORY FOR NAMES OF MANUFACTURES.
2. STEELE SLEEVE - (OPTIONAL) - NOM. 12" DIAM SCHEDULE 40 (OR HEAVIER) STEEL PIPE CAST OR GROUTED INTO FLOOR OR WALL ASSEMBLY. FLUSH WITH FLOOR OR WALL SURFACES A MAX. OF 3" ABOVE THE FLOOR. IF THE STEEL SLEEVE EXTENDS ABOVE THE FLOOR, THE T RATING OF THE FIRESTOP SYSTEM IS 0 HR AND A MIN ½" ANNULAR SPACE IS REQUIRED BETWEEN THE THROUGH PENETRANT (ITEM 3) AND THE PERIPHERY OF THE OPENING. THE W RATING DOES NOT APPLY WHEN THE STEEL SLEEVE IS USED.
3. THROUGH PENETRANTS - ONE NONMETALLIC PIPE TO BE INSTALLED EITHER CONCENTRICALLY OR ECCENTRICALLY WITHIN THE FIRESTOP SYSTEM. FOR MAX. 6" DIAM. PIPES, THE ANNULAR SPACE BETWEEN THE PIPE AND THE PERIPHERY OF OPENING SHALL BE MIN. 0" TO MAX. ½", FOR NOM. 8" AND 10" DIAM. PIPES THE ANNULAR SPACE BETWEEN THE PIPE AND THE PERIPHERY OF OPENING SHALL BE MIN. 0" TO MAX. 1¼". IF THE STEEL SLEEVE EXTENDS ABOVE THE FLOOR (ITEM 2), A MIN. ½" ANNULAR SPACE IS REQUIRED BETWEEN THE THROUGH PENETRANT (ITEM 3) AND THE PERIPHERY OF THE OPENING. PIPE TO BE RIGIDLY SUPPORTED ON BOTH SIDES OF FLOOR OR WALL ASSEMBLY. FOR SYSTEMS WITH A W RATING, THE MAX. ANNULAR SPACE IS ½". THE T RATINGS ARE DEPENDENT ON THE SIZE AND/OR TYPE OF PIPE AS SHOWN IN THE TABLE BELOW. THE FOLLOWING TYPES AND SIZES OF NON-METALLIC PIPES MAY BE USED.
   - A. POLYVINYL CHLORIDE PIPE (PVC) - NOM. 10" DIAM. (OR SMALLER) SCHEDULE 40 SOLID CORE OR CELLULAR CORE PVC PIPE FOR USE IN CLOSED (PROCESS OR SUPPLY) OR VENTED (DRAIN, WASTE OR VENT) PIPING SYSTEMS. FOR SYSTEMS WITH A W RATING, THE NOM. DIAM. OF PIPE SHALL NOT EXCEED 6".
   - B. CHLORINATED POLYVINYL CHLORIDE (CPVC) PIPE - NOM. 10" DIAM. (OR SMALLER) SDR13.5 CPVC PIPE FOR USE IN CLOSED (PROCESS OR SUPPLY) PIPING SYSTEMS. FOR SYSTEMS WITH A W RATING, THE NOM. DIAM. OF PIPE SHALL NOT EXCEED 6".
   - C. AGRYLONITRATE BUTADIENE STYRENE (ABS) PIPE - NOM. 6" DIAM. (OR SMALLER) SCHEDULE 40 SOLID-CORE OR CELLULAR CORE ABS PIPE FOR USE IN CLOSED (PROCESS OR SUPPLY) OR VENTED (DRAIN, WASTE OR VENT) PIPING SYSTEM.
   - D. FLAME RESISTANT POLYPROPYLENE (FRPP) PIPE - NOM. 6" DIAM. (OR SMALLER) SCHEDULE 40 FRPP PIPE FOR USE IN CLOSED (PROCESS OR SUPPLY) OR VENTED (DRAIN, WASTE OR VENT) PIPING SYSTEMS.
4. FILL, VOID OR CAVITY MATERIAL* - SEALANT - MIN. ½" THICKNESS OF FILL MATERIAL APPLIED WITHIN THE ANNULUS, FLUSH WITH TOP OR BOTTOM SURFACE OF FLOOR OR BOTH SURFACES OF WALL. SEALANT IS OPTIONAL FOR PIPES HAVING A MAX. DIAM. OF 6" IN UNSLEEVED OPENINGS. FOR SYSTEMS WITH W RATING AND/OR L RATING MIN. ½" THICKNESS OF CP 601S, CP 5-S SIL SL (FLOORS ONLY) SEALANT SHALL BE APPLIED WITHIN THE ANNULUS, FLUSH WITH TOP OR BOTTOM SURFACE OF FLOOR. HILTI CONSTRUCTION CHEMICALS, DIV. OF HILTI INC. - FS-ONE MAX INTUMESCENT SEALANT, CP 601S SEALANT, CFS-S SIL GG, CFS-S SIL SL (FLOORS ONLY) SEALANT.

4A. PACKING MATERIAL - (NOT SHOWN) - MIN. ½" THICKNESS OF 4 pcf MINERAL WOOL BATT INSULATION FIRMLY PACKED INTO ANNULAR SPACE AND RECESSED FROM THE TOP SURFACE OF FLOOR TO ACCOMODATE THE REQUIRED THICKNESS OF FILL MATERIAL. REQUIRED ONLY WHEN CP 604 SEALANT IS USED.

5. FIRESTOP DEVICE* FIRESTOP COLLAR - FIRESTOP COLLAR SHALL BE INSTALLED IN ACCORDANCE WITH THE ACCOMPANYING INSTRUCTIONS. COLLAR TO BE INSTALLED AND LATCHED AROUND THE PIPE AND SECURED TO UNDERSIDE OF FLOOR OR BOTH SIDES OF WALL USING THE ANCHOR HOOKS PROVIDED WITH THE COLLAR. MINIMUM TWO ANCHOR HOOKS FOR NOM. 1½" AND 2" DIAM. PIPES. MINIMUM THREE ANCHOR HOOKS REQUIRED FOR NOM. 3" AND 4" DIAM. PIPES. MINIMUM FOUR ANCHOR HOOKS REQUIRED FOR NOM. 6" DIAM. PIPES. MINIMUM 10 ANCHOR HOOKS REQUIRED FOR NOM. 8" DIAM. PIPES. MINIMUM TWELVE ANCHOR HOOKS REQUIRED FOR NOM. 10" DIAM. PIPES. THE ANCHOR HOOKS ARE TO BE SECURED WITH MIN. ¼" DIAM. BY MIN. 1¼" LONG STEEL EXPANSION BOLTS OR MIN. 0.145" DIAM. BY 1¼" LONG POWDER ACTUATED FASTENERS UTILIZING A 1 7/16" DIAM. BY 1/16" THICK STEEL WASHER. AS ALTERNATES TO THE ANCHORS SPECIFIED ABOVE, HILTI ¼" DIAM. BY 1¼" LONG KWIK-CON II + CONCRETE SCREW ANCHOR. HILTI ¼" DIAM. BY 1¾" LONG KWIK-BOLT 3 STEEL EXPANSION ANCHOR OR HILTI X-DNI 27 P8 S15 POWDER ACTUATED FLOOR PIN WITH INTEGRAL NOM. 0.116" DIAM. WASHER MAY BE USED. HILTI CONSTRUCTION CHEMICALS, DIV. OF HILTI INC. - CP 643N 50/1.5", CP 643N 63/2", CP 643N 90/3", CP 643N 110/4", CP 643 160/6", CP 644-200/8" OR US OR CP 644-250/10" US FIRESTOP COLLAR.

* INDICATES SUCH PRODUCTS SHALL BEAR THE UL CERTIFICATION MARK FOR JURISDICTIONS EMPLOYING THE UL.

5 PIPE PENETRATION THRU 1-HR OR 2-HR WALL DETAIL

NO SCALE

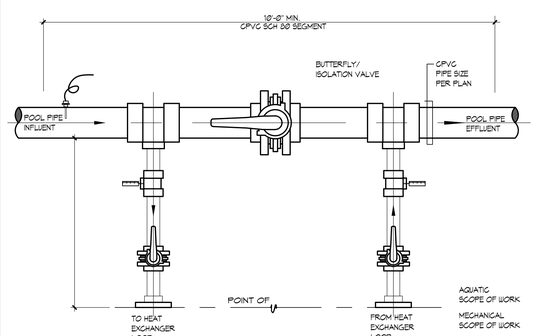

1"=1'-0"

6 POOL HEATING LOOP/HEAT EXCHANGER LOOP CONNECTION

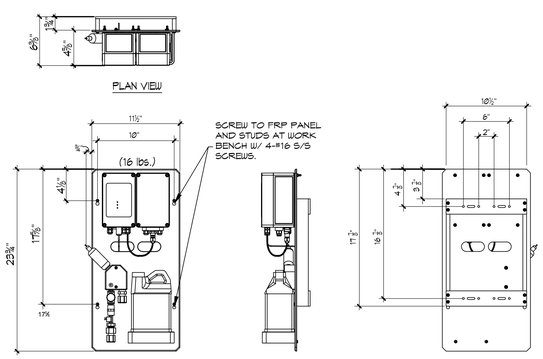

7 BECSys ALKALINITY METER

1½"=1'-0"

els architecture+ urban design
2040 Addison St, Berkeley, CA 94704
510.549.2929 | elsarch.com

PROJECT:

PIEDMONT COMMUNITY POOL

777 MAGNOLIA AVENUE PIEDMONT, CA 94611

PROJECT NUMBER: 202115

CLIENT:

CITY OF PIEDMONT
120 VISTA AVENUE
PIEDMONT, CA 94611

PROJECT TEAM:

ARCHITECT:
ELS ARCHITECTURE AND URBAN DESIGN
2040 Addison Street
Berkeley, CA 94704
P: 510.549.2929

CIVIL ENGINEER:
BKF ENGINEERS
4670 Willow Road, Suite 250
Pleasanton, CA 94588
P: 925.396.7700

LANDSCAPE ARCHITECT:
SWA
2200 Bridgeway
Sausalito, CA 94965
P: 415.332.5100

STRUCTURAL ENGINEER:
FORELL/ELSESSER
160 Pine Street, Suite 600
San Francisco, CA 94111
P: 415.837.0700

MEP / FIRE / TELECOM / SECURITY:
GUTTMANN & BLAEVOET
2351 Powell Street
San Francisco, CA 94133
P: 415.655.4000

AQUATICS:
AQUATIC DESIGN GROUP
2226 Faraday Avenue
Carlsbad, CA 92008
P: 760.438.8400

SPECIFICATIONS:
TOPFLIGHT SPECS
49 Geary Street, Suite 230
San Francisco, CA 94108-5748
P: 415.546.6033

REVISION

NUMBER	DATE	DESCRIPTION

ISSUE: **100% DESIGN DEVELOPMENT**

DATE: **APRIL 30, 2022**

STAMP:

NOT FOR CONSTRUCTION

SHEET TITLE: **DETAILS**

SHEET NUMBER: **MR-8**